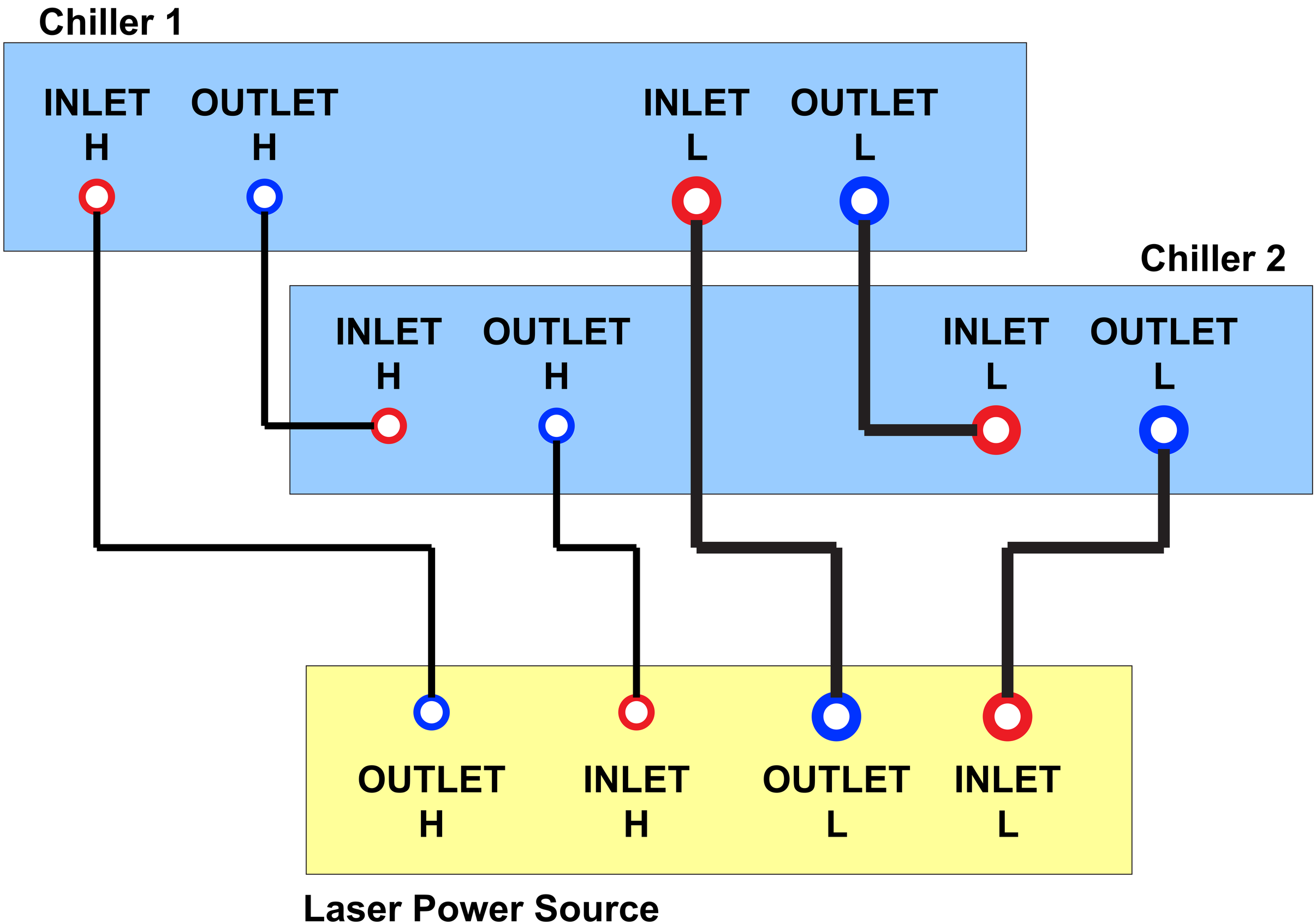
Chiller 1
INLET H
OUTLET H
INLET L
OUTLET L
Chiller 2
INLET H
OUTLET H
INLET L
OUTLET L
OUTLET H
INLET H
OUTLET L
INLET L
Laser Power Source