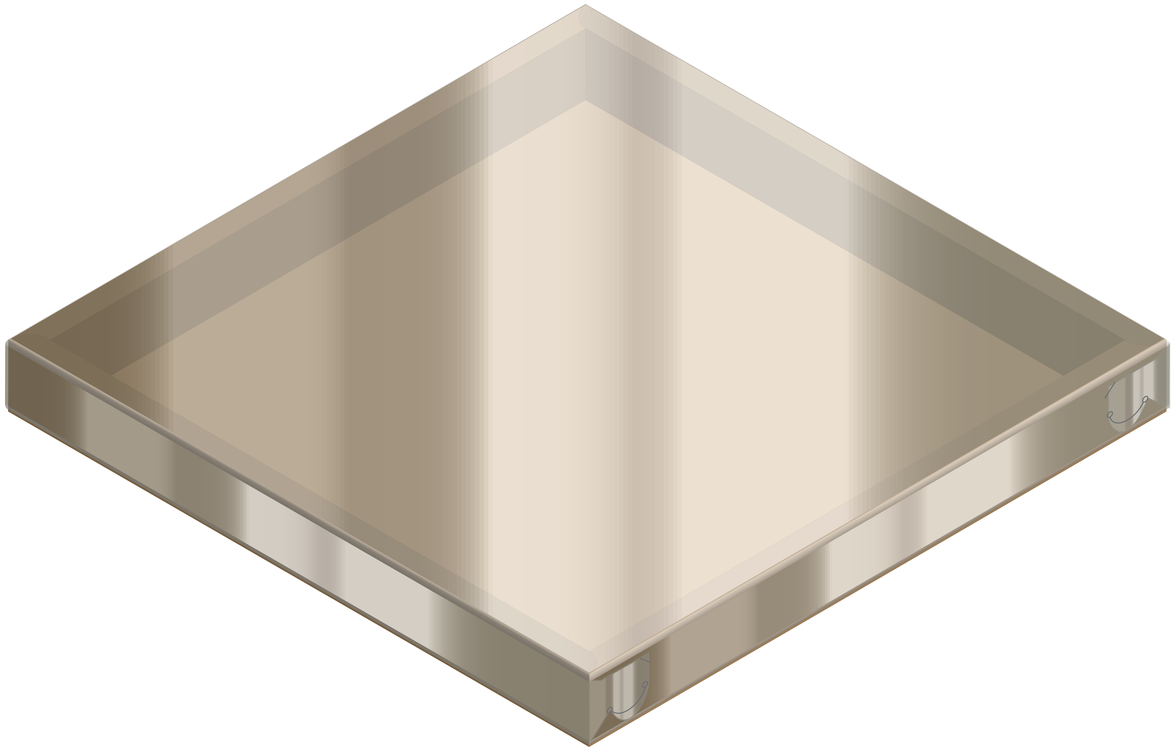

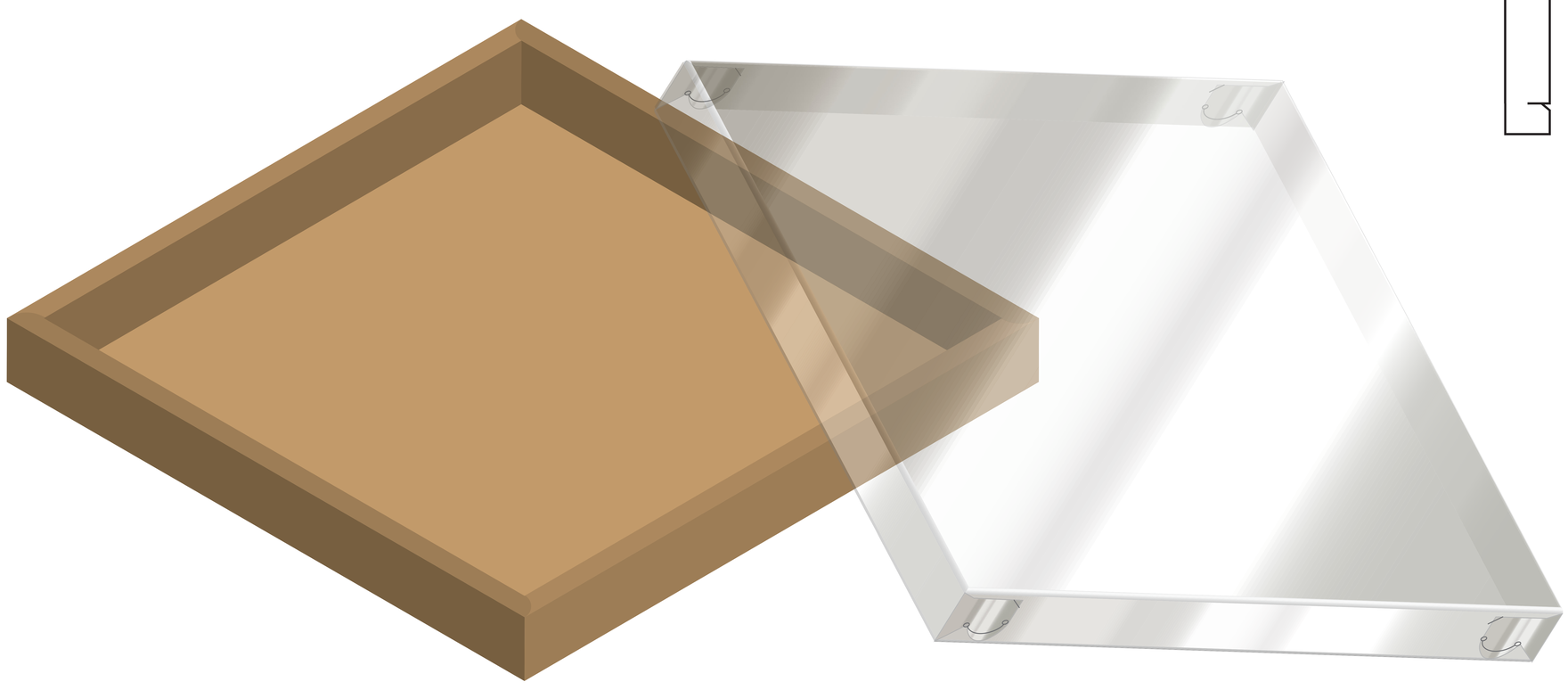

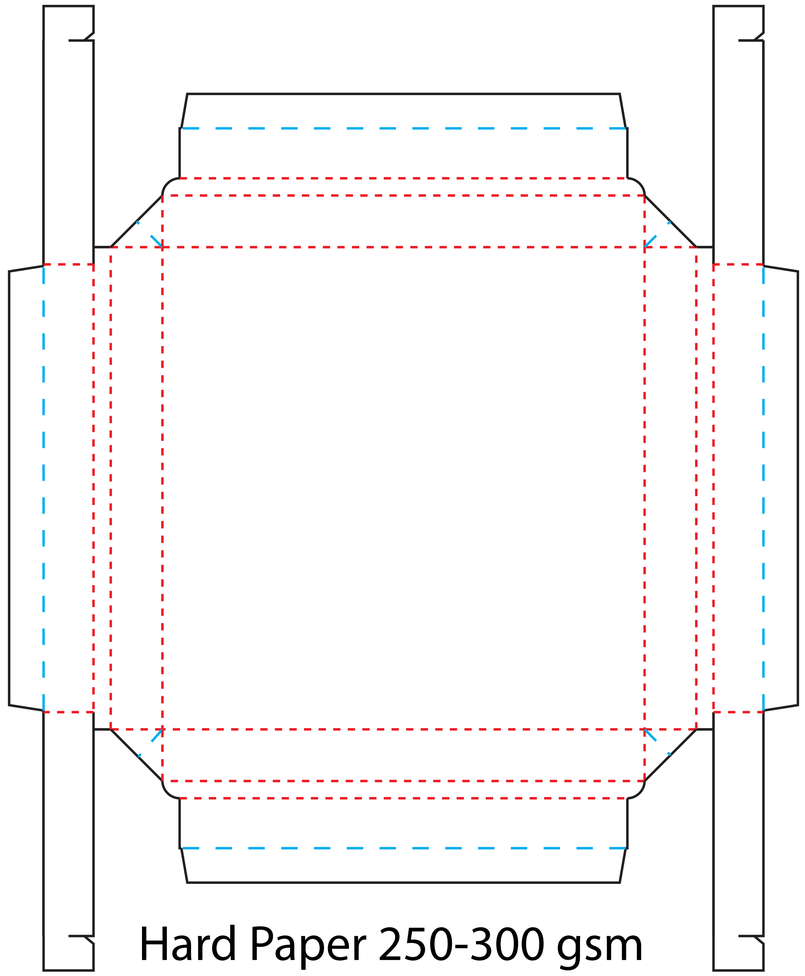

Hard Paper 250-300 gsm

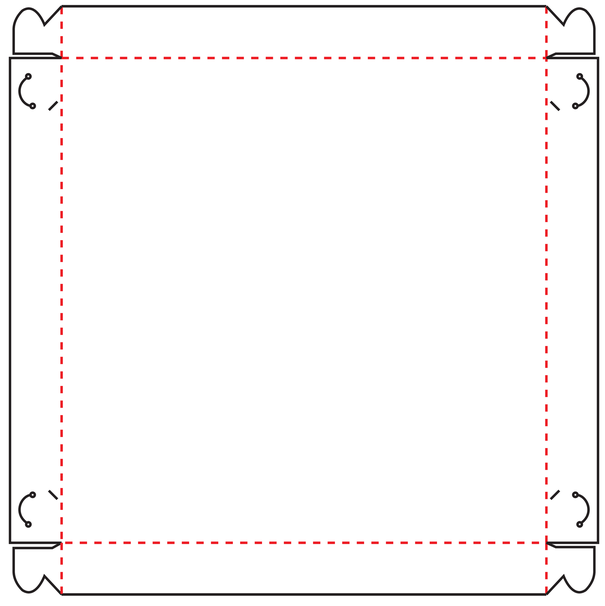

Transparent Plastic Sheet 200 micron

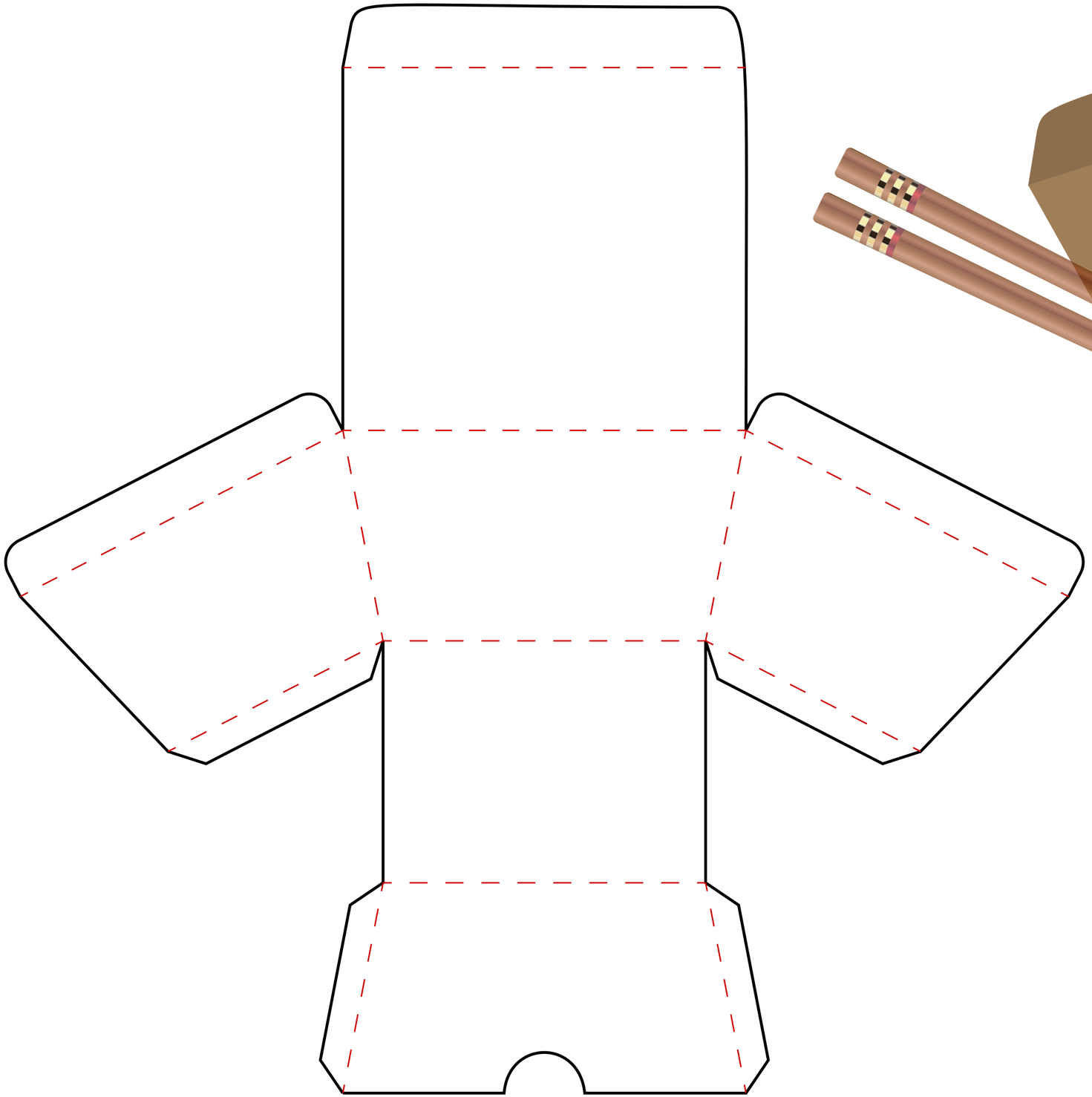

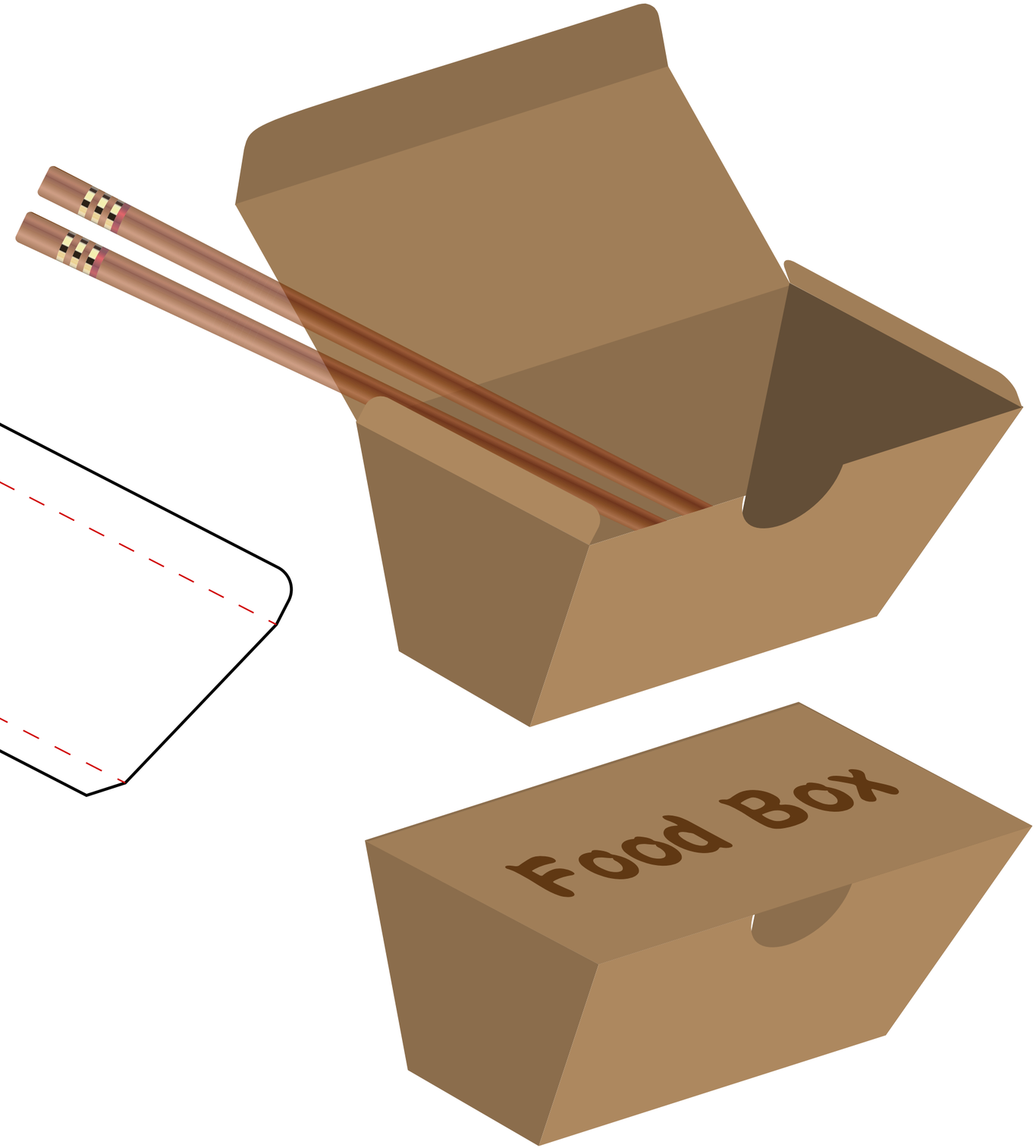
Food Box

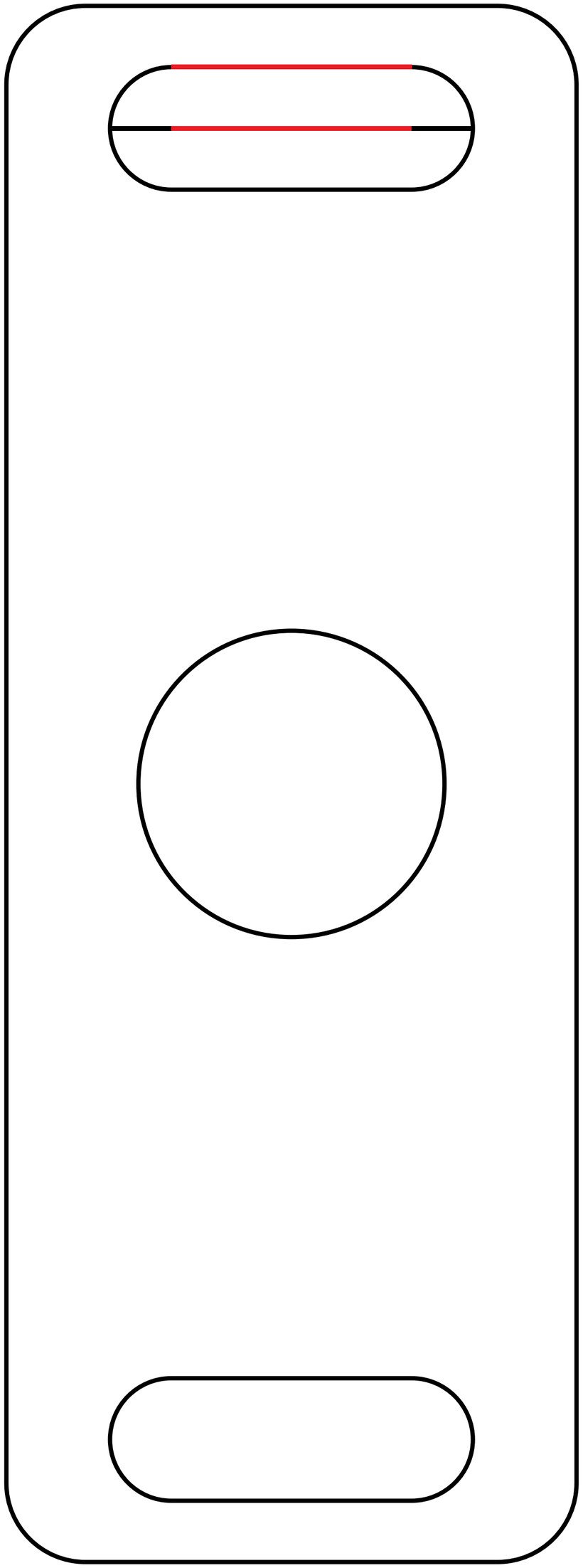

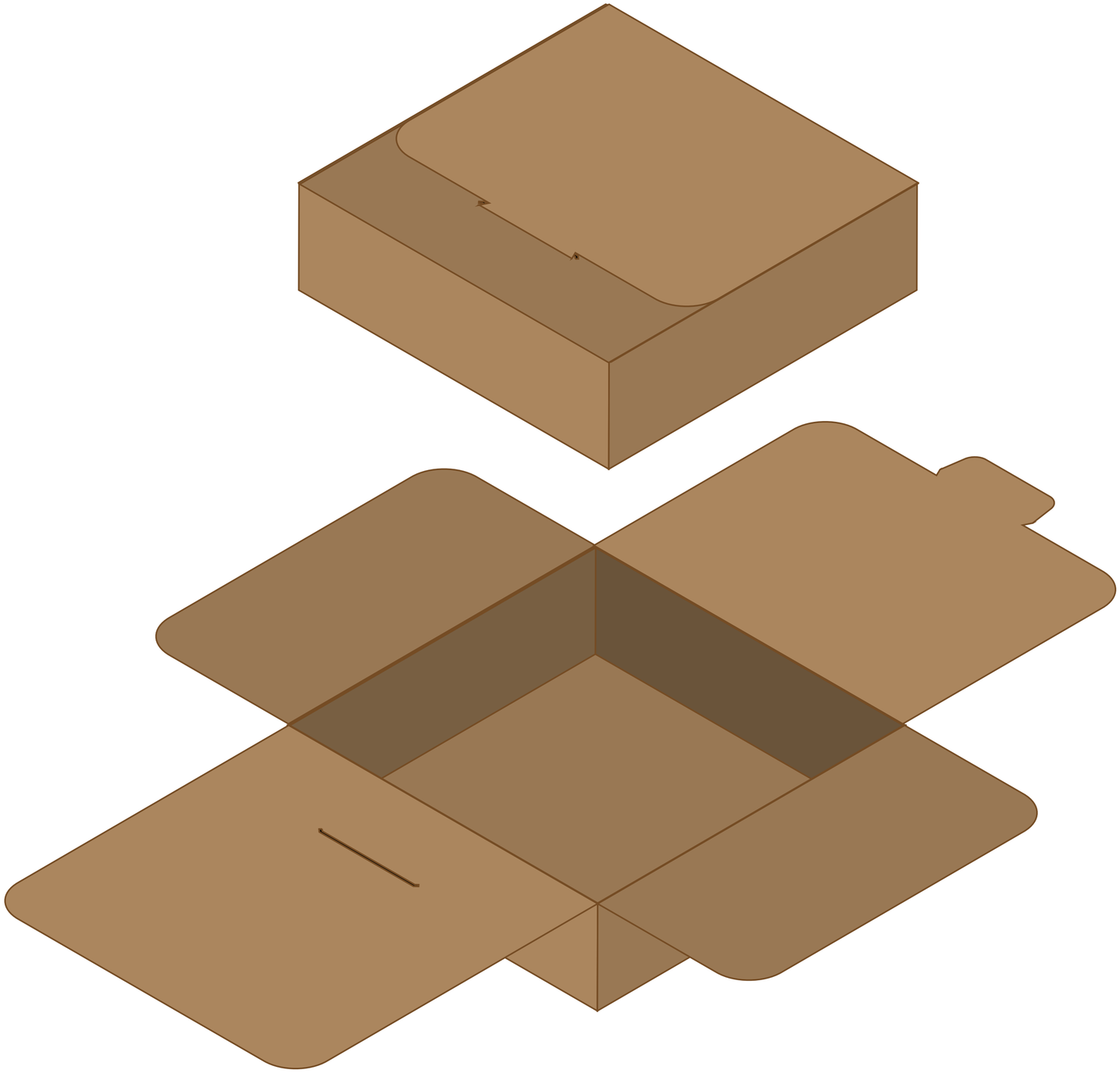

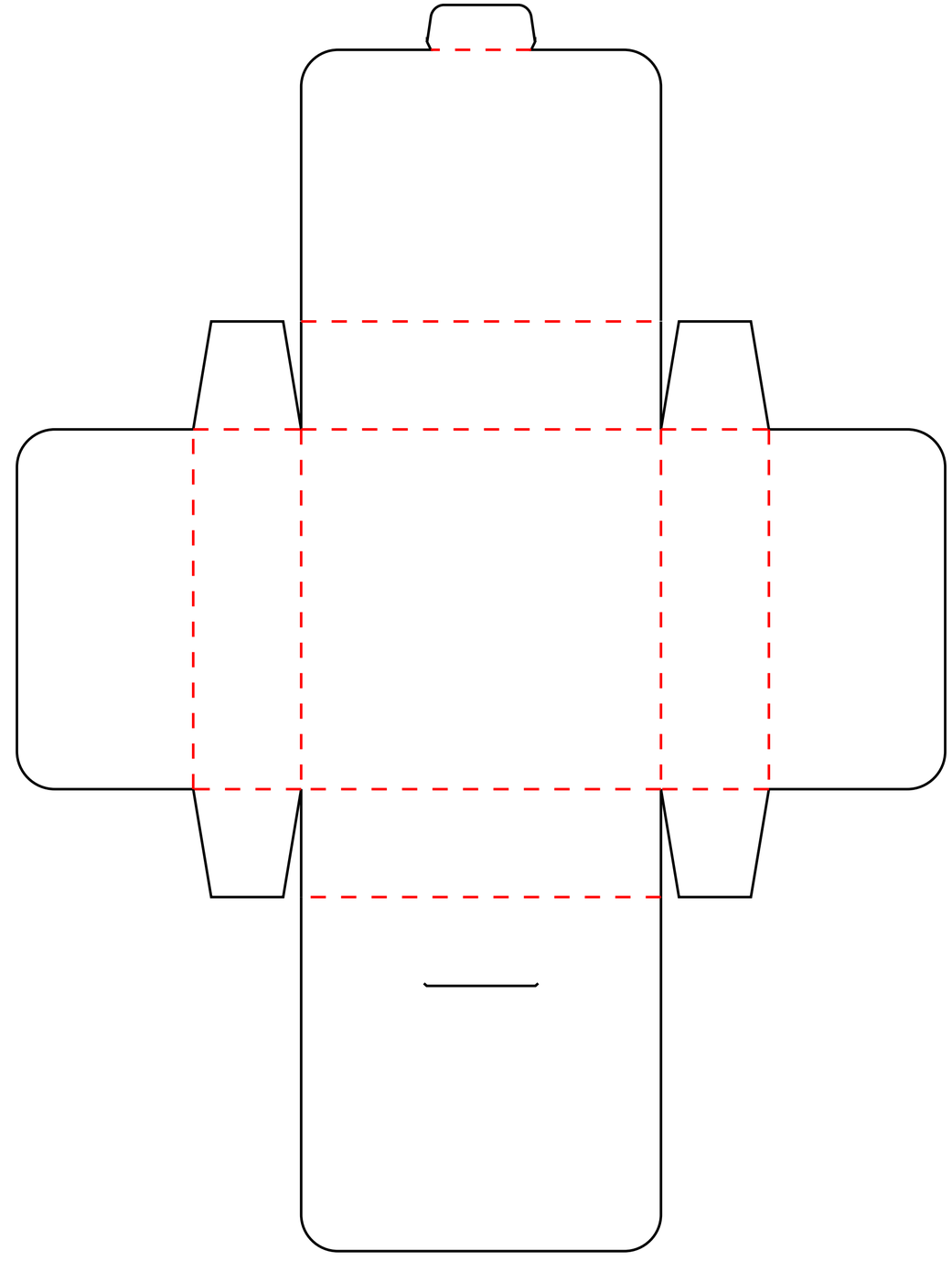

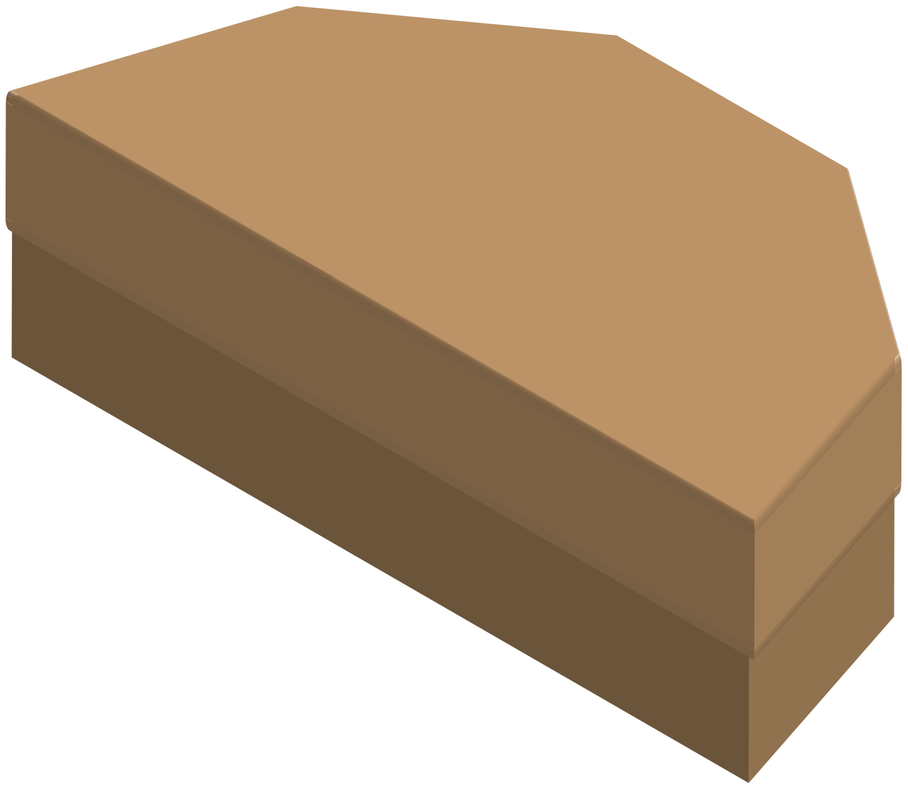

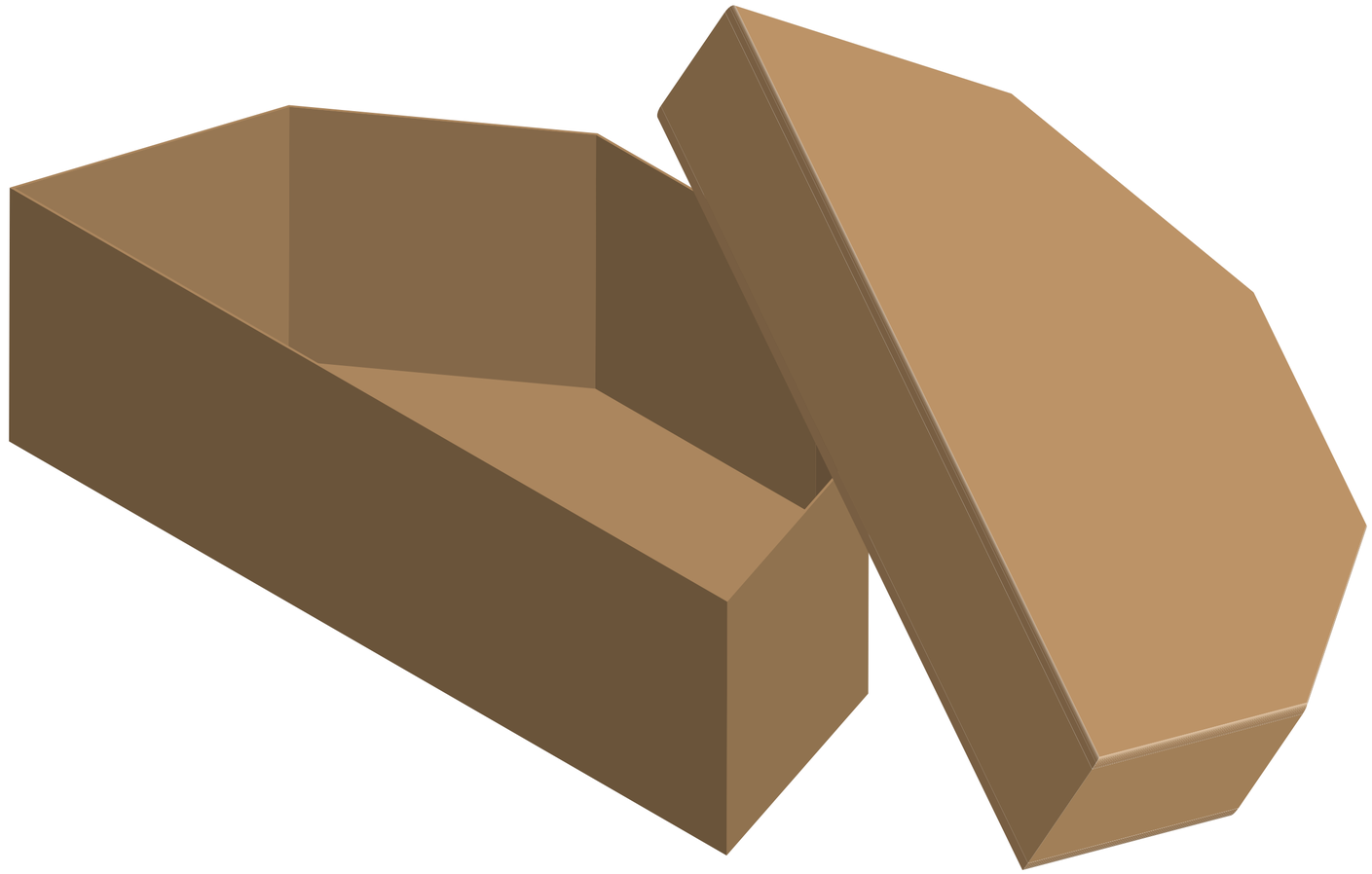

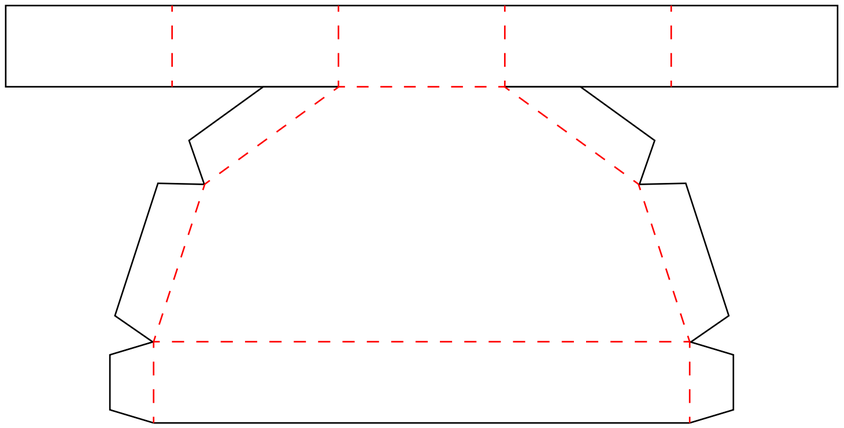

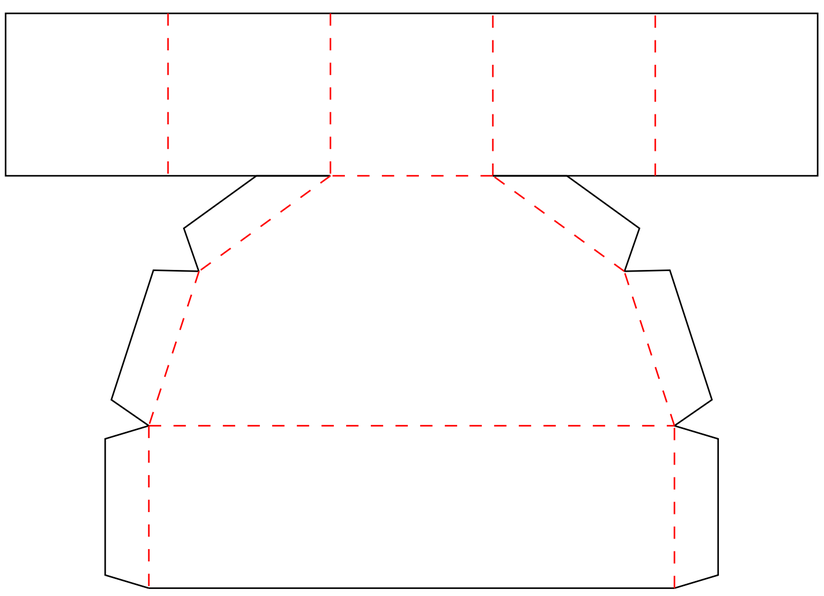

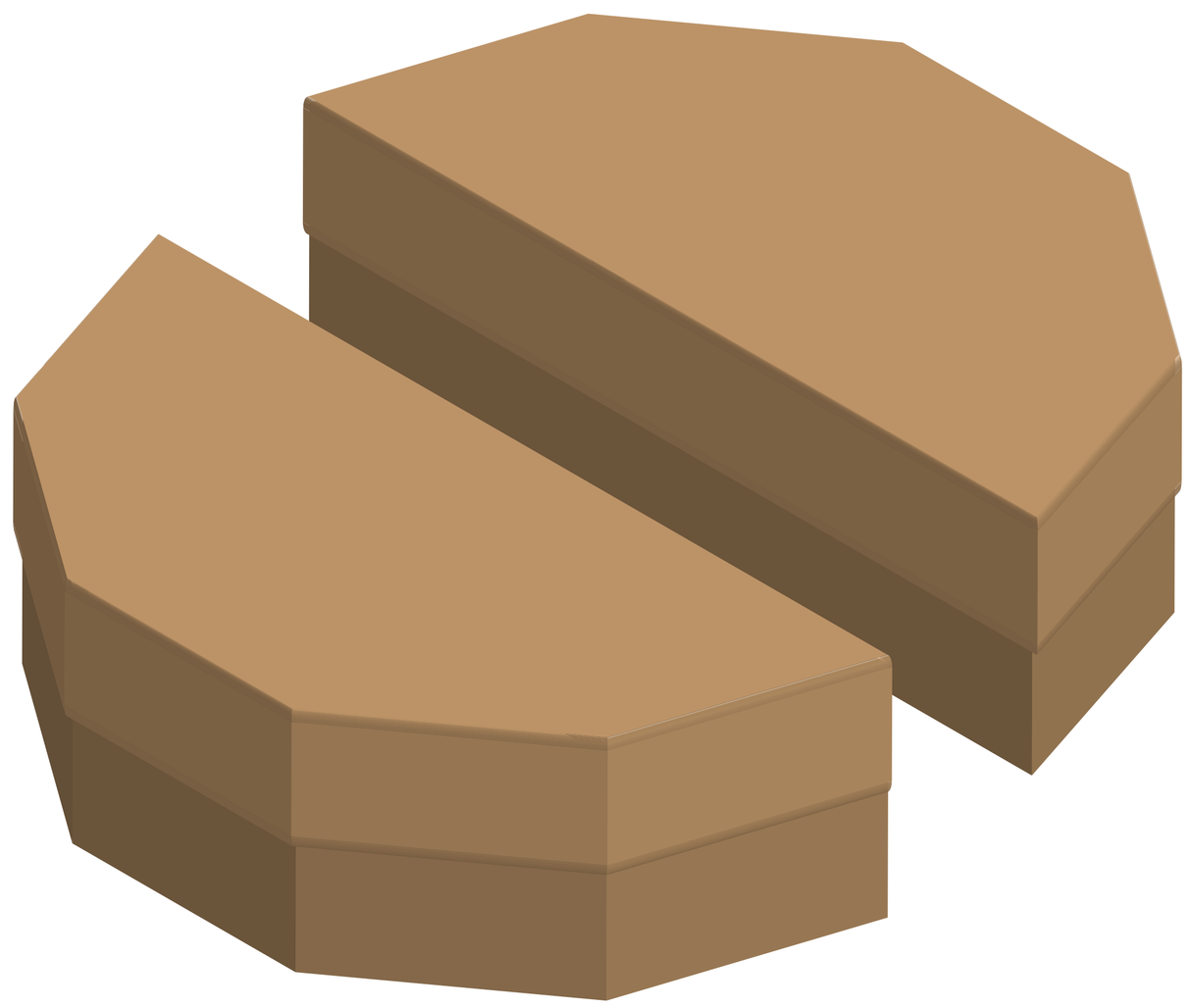

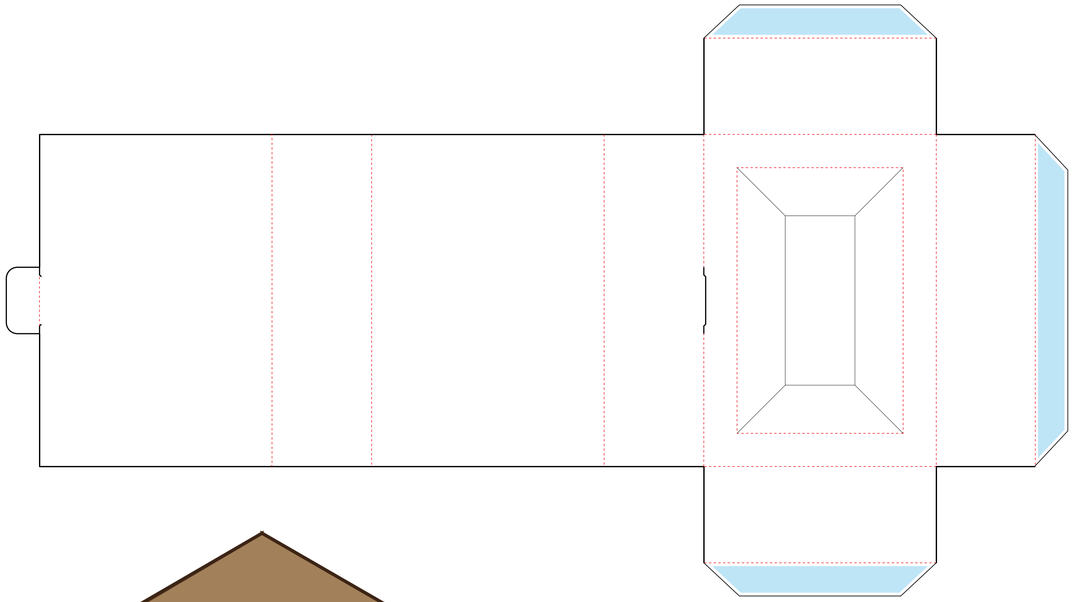

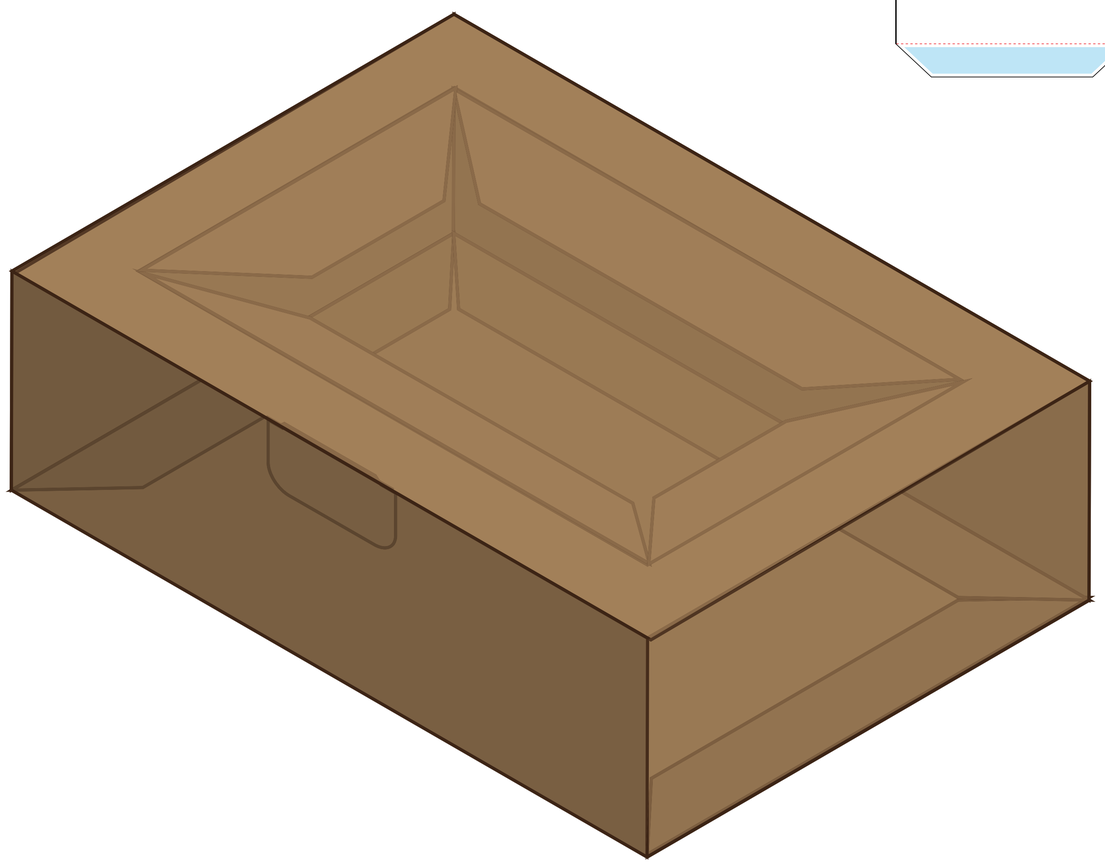

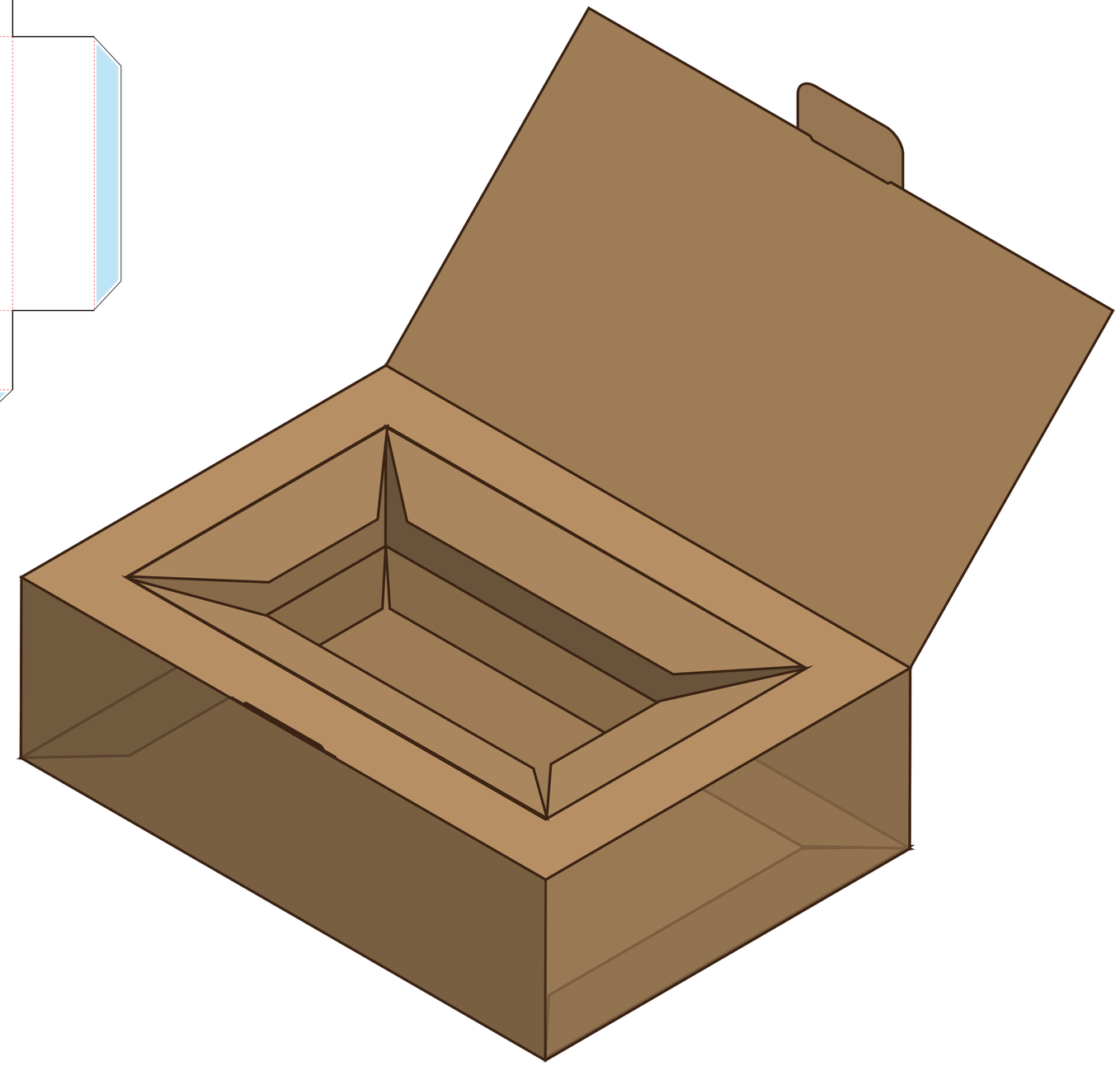

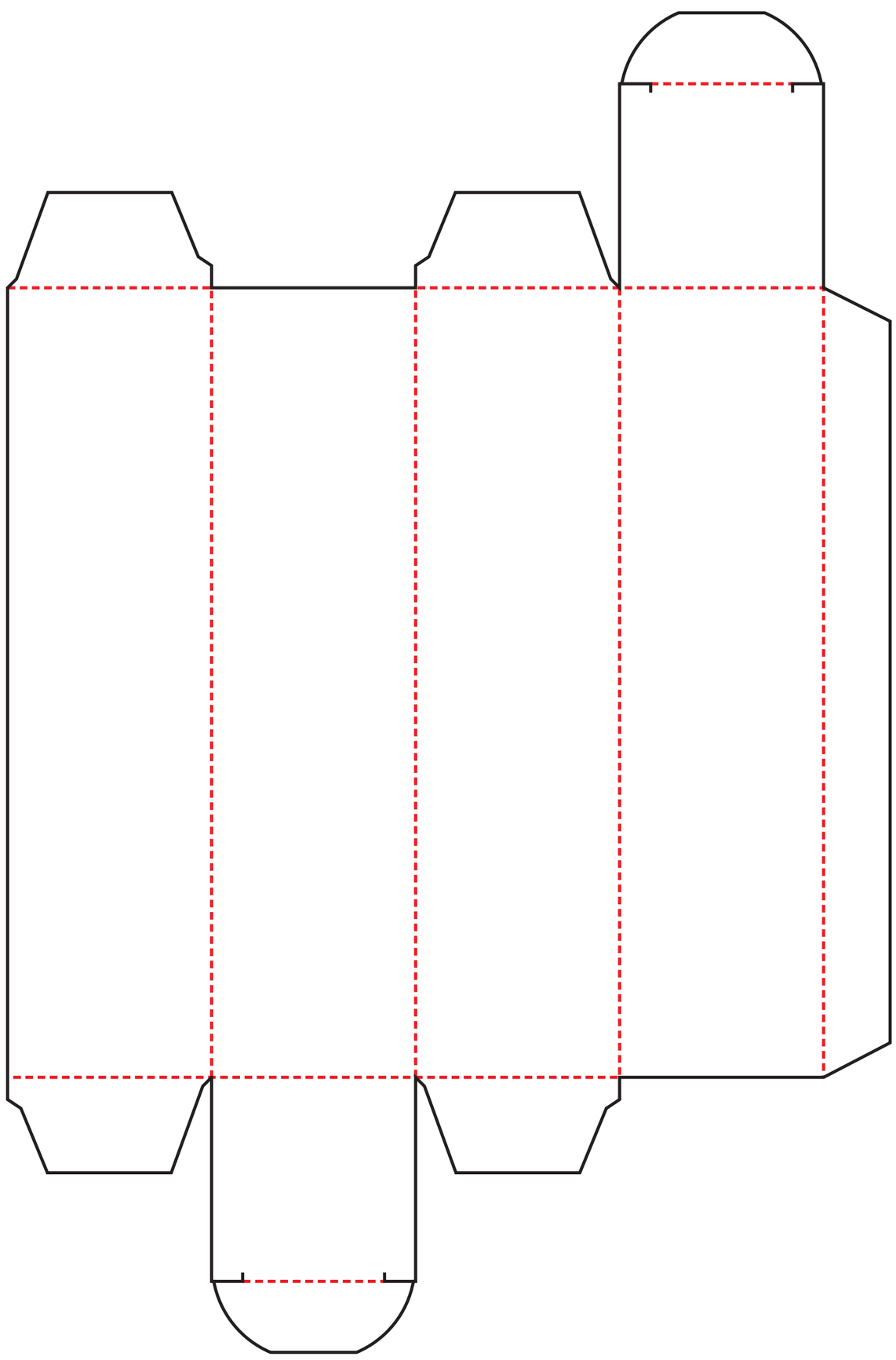

Hard Paper 200-350 gsm

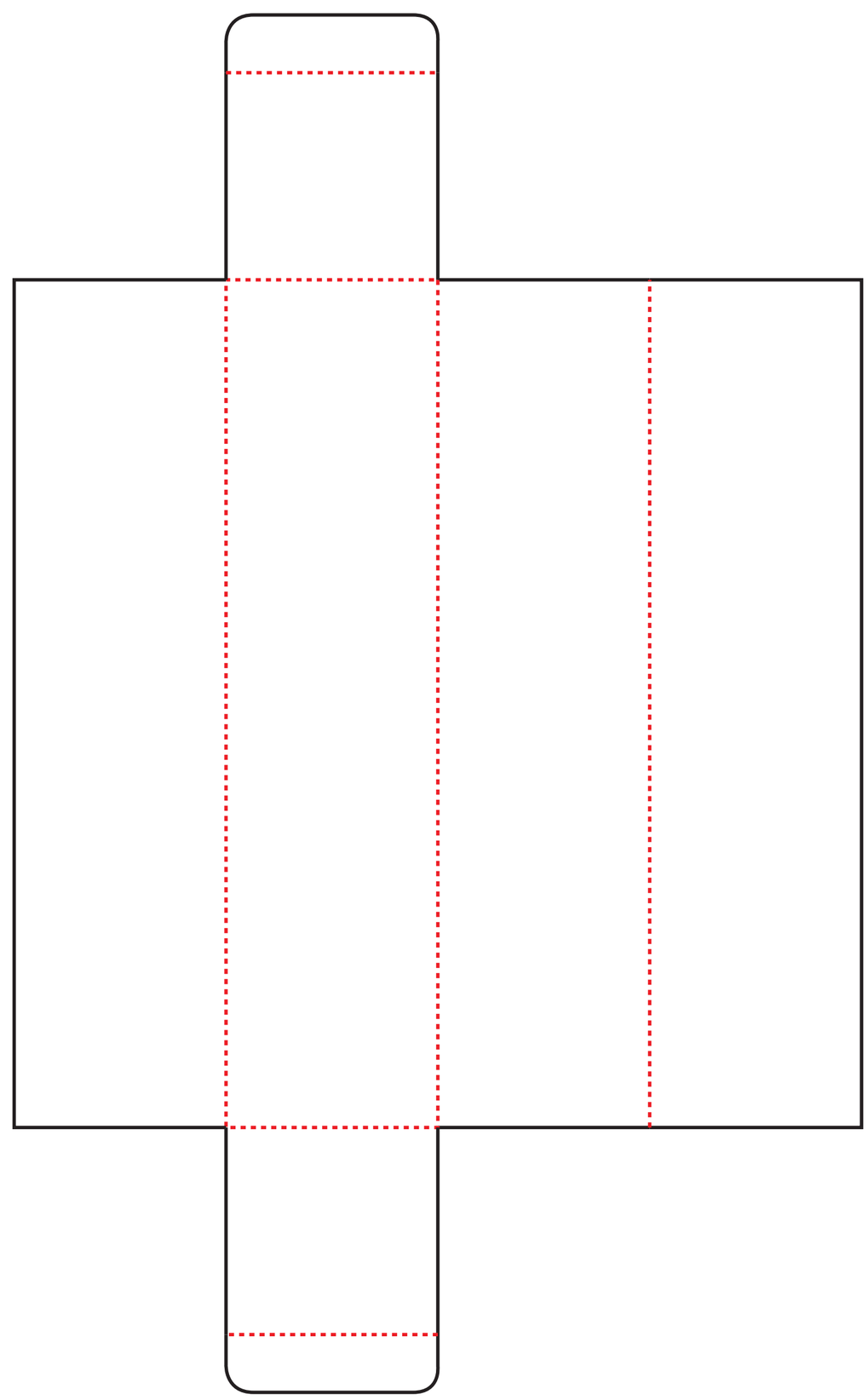

Corrugated Paper E Flute

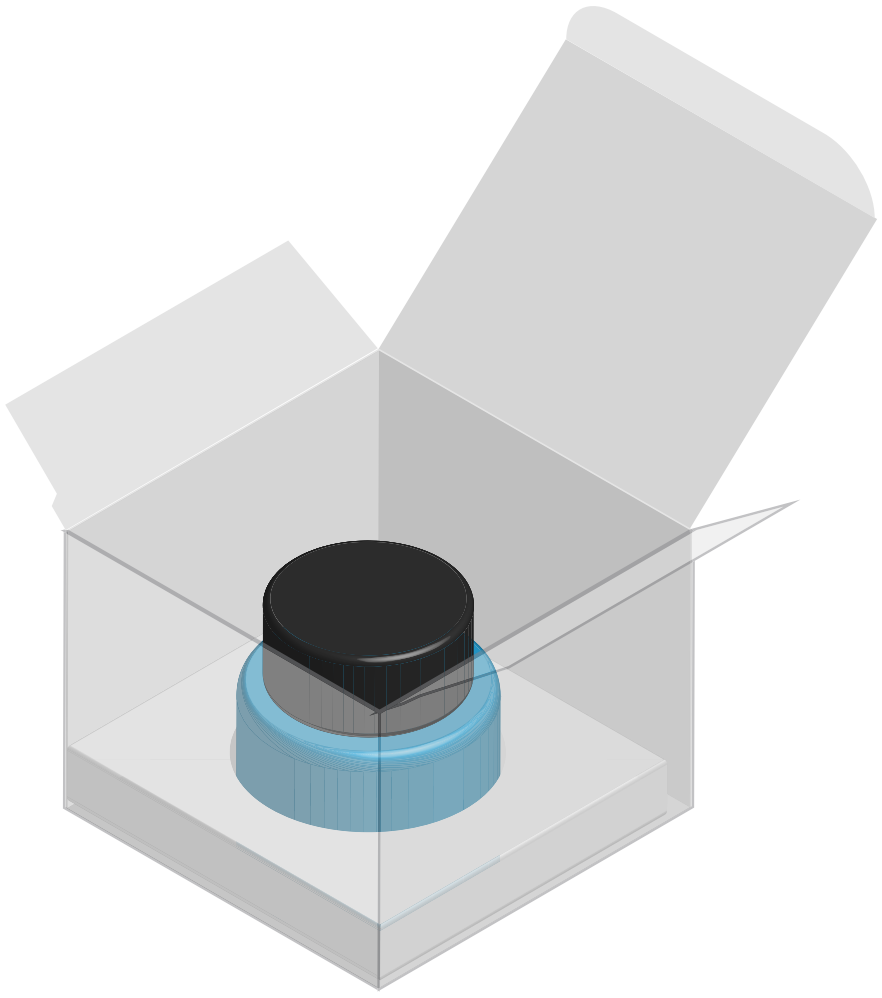

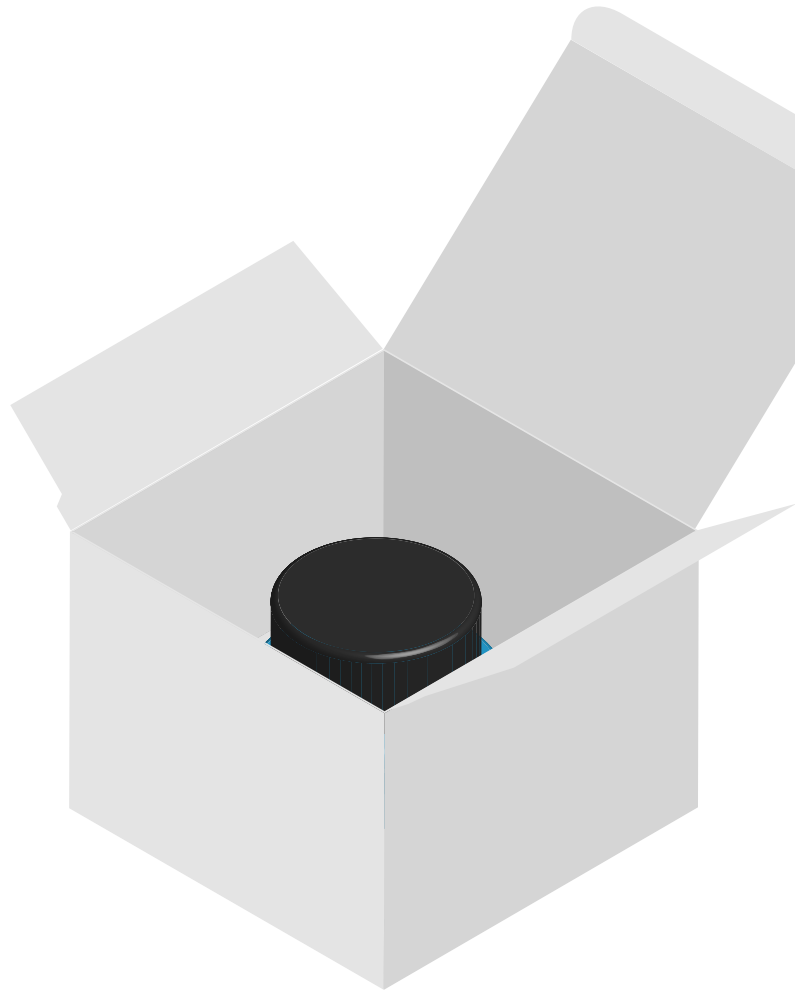

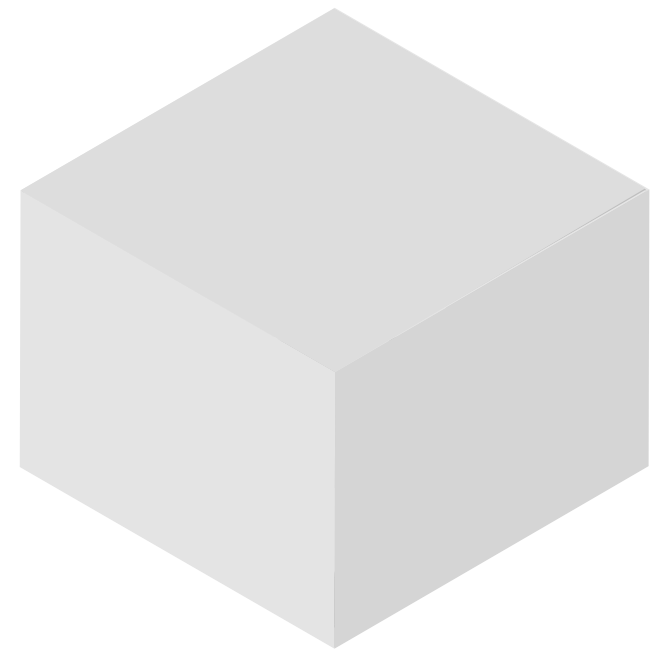

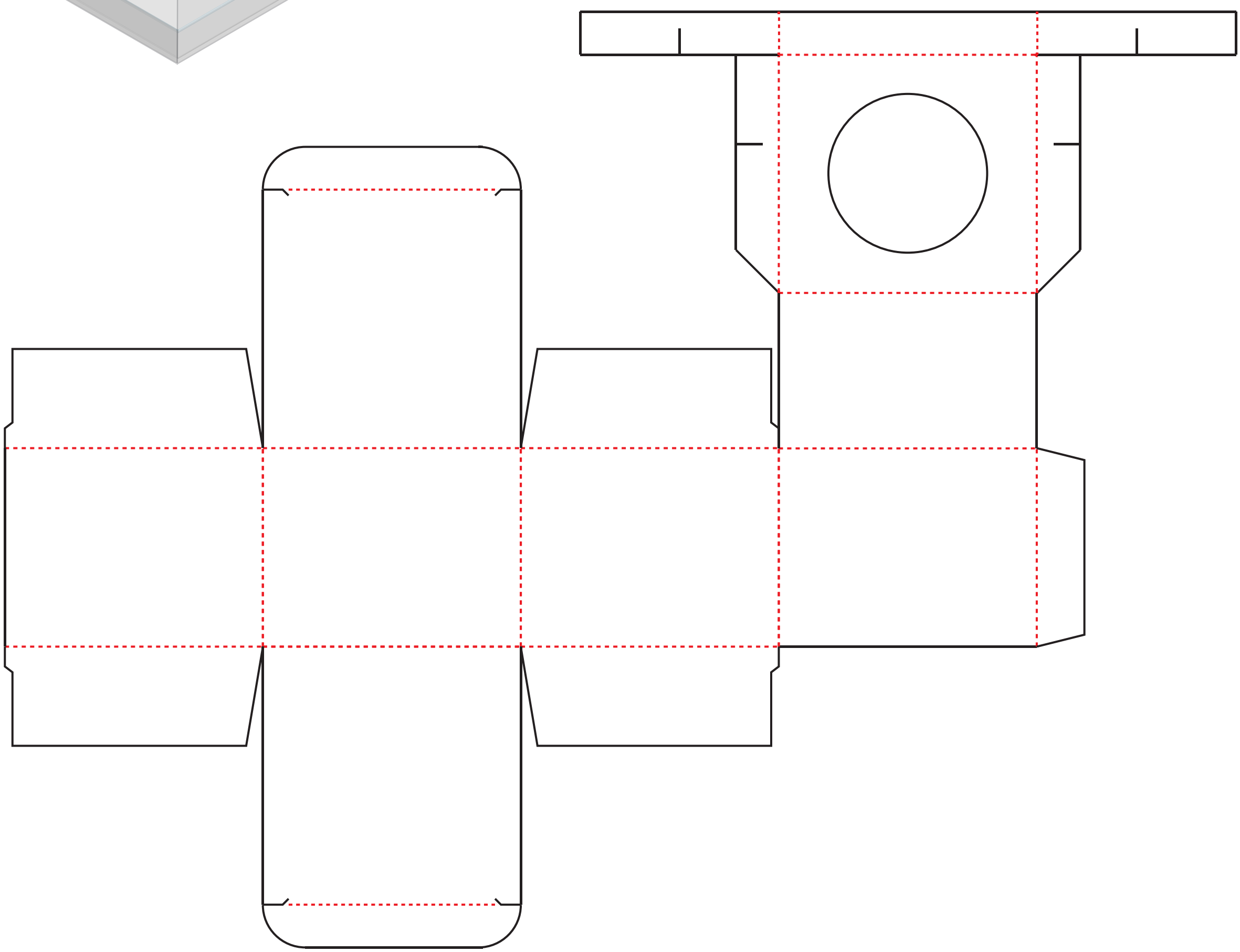

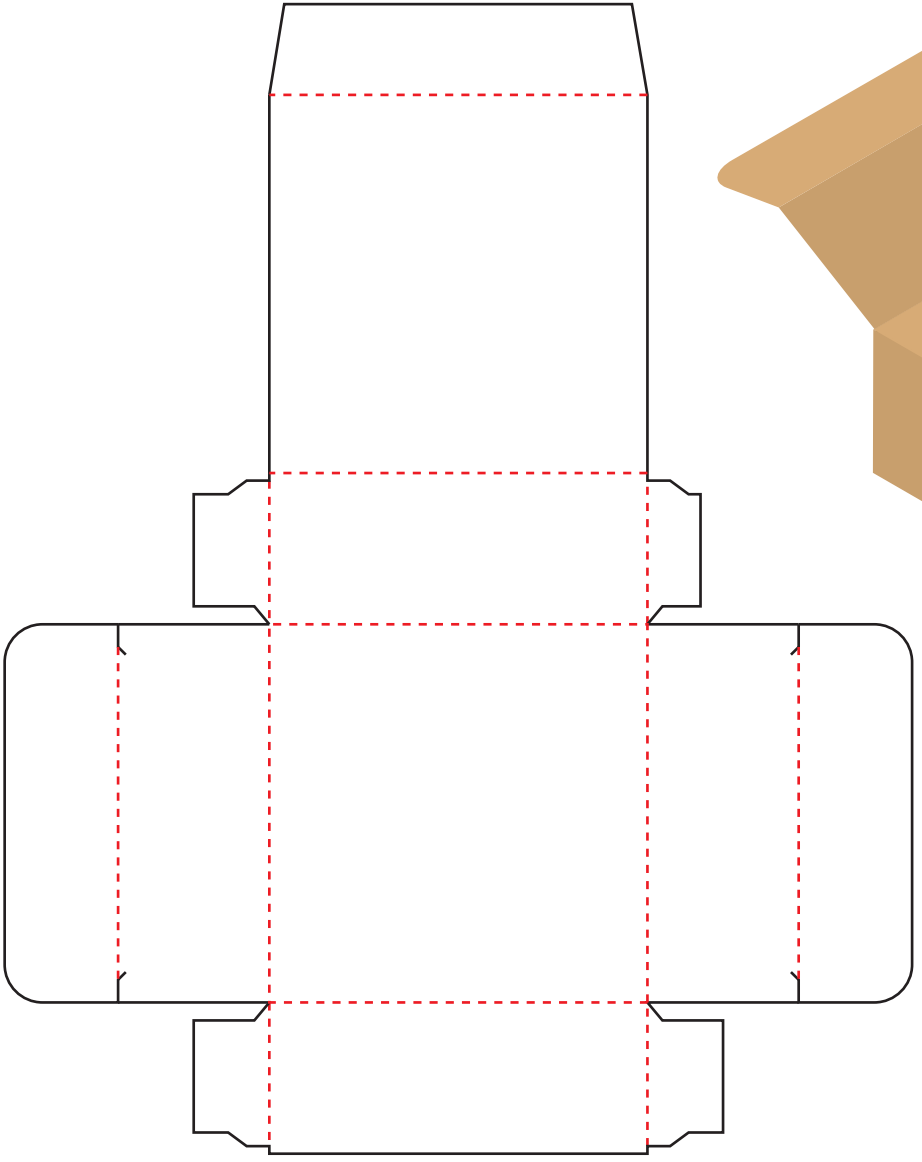

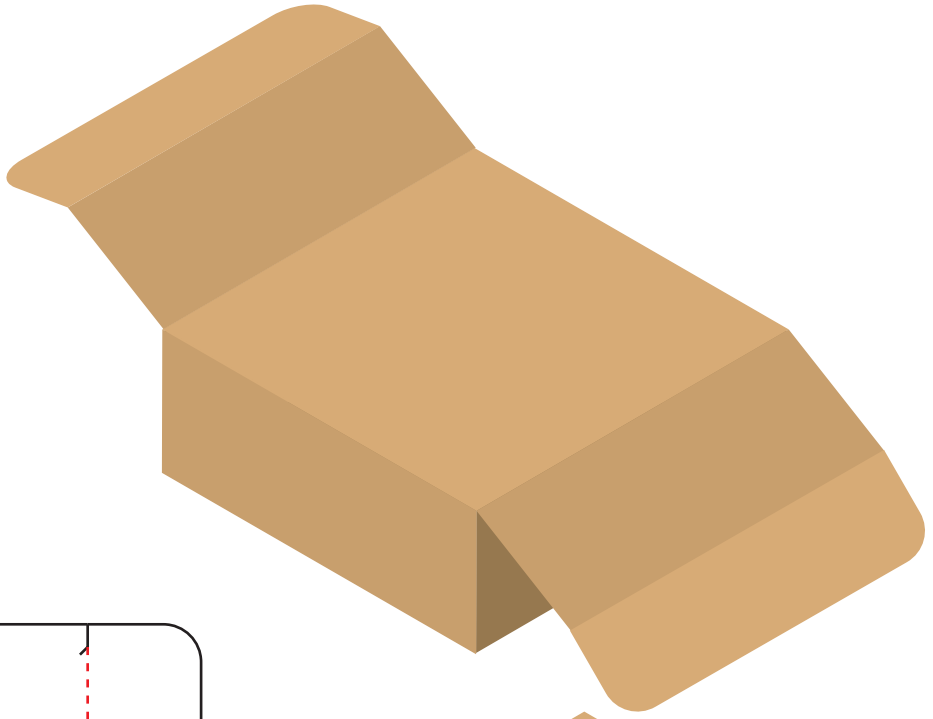

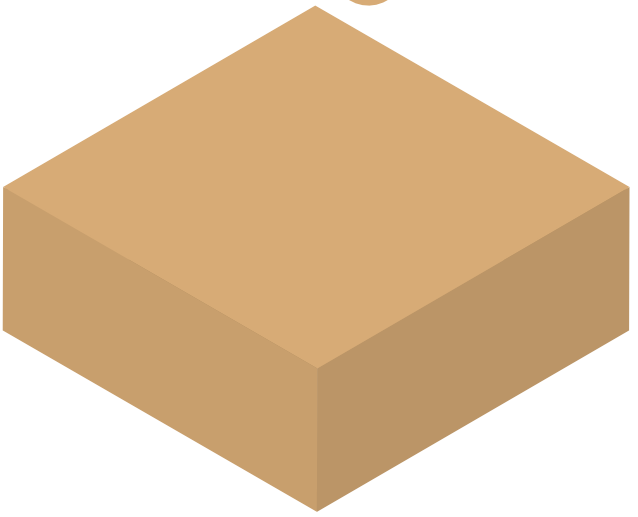

Hard Paper 200-350 gsm

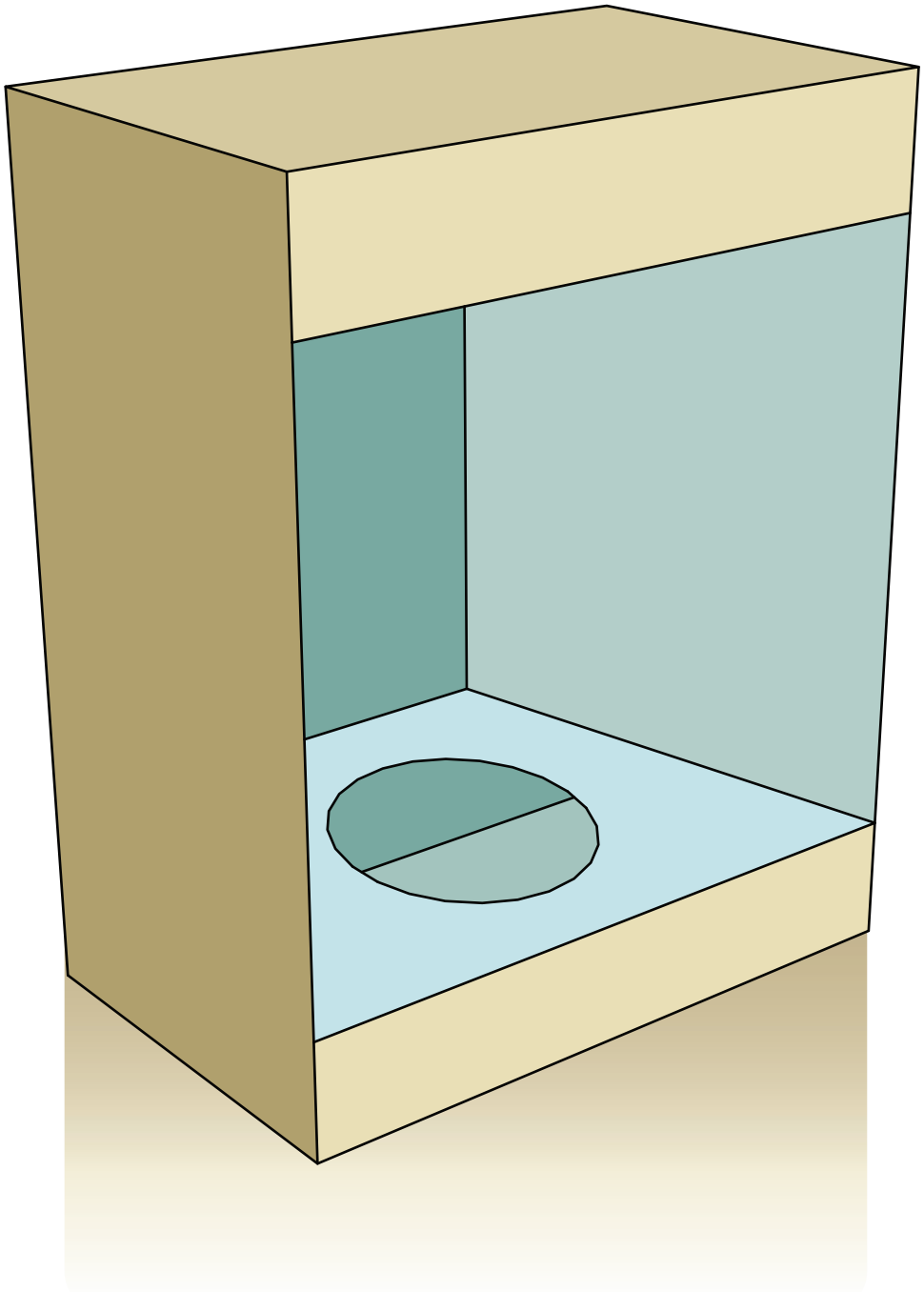

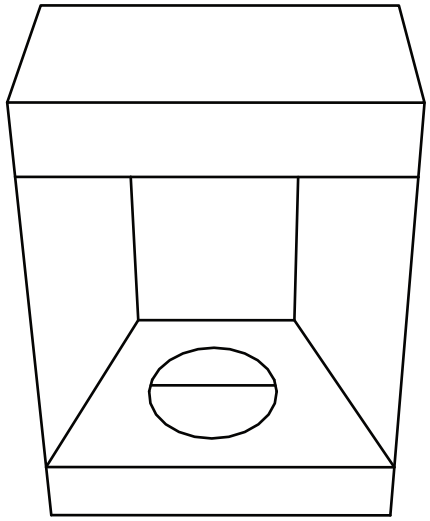

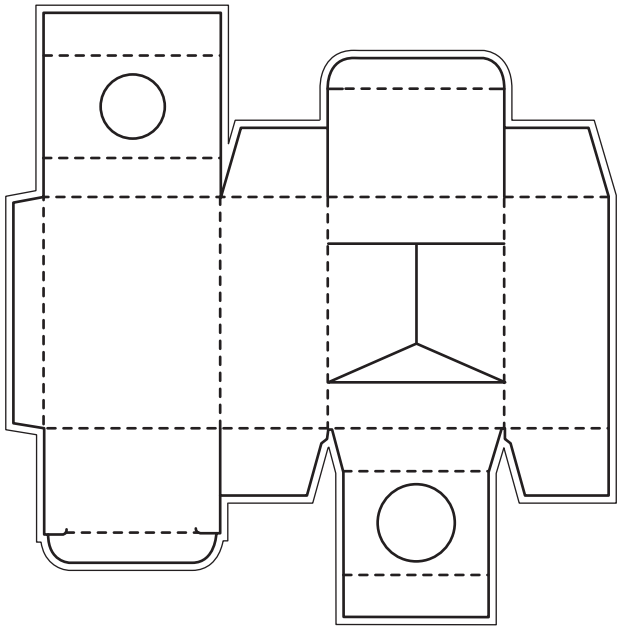

printing bleed

die-cuting line

folding line

perforaion line

zipper line

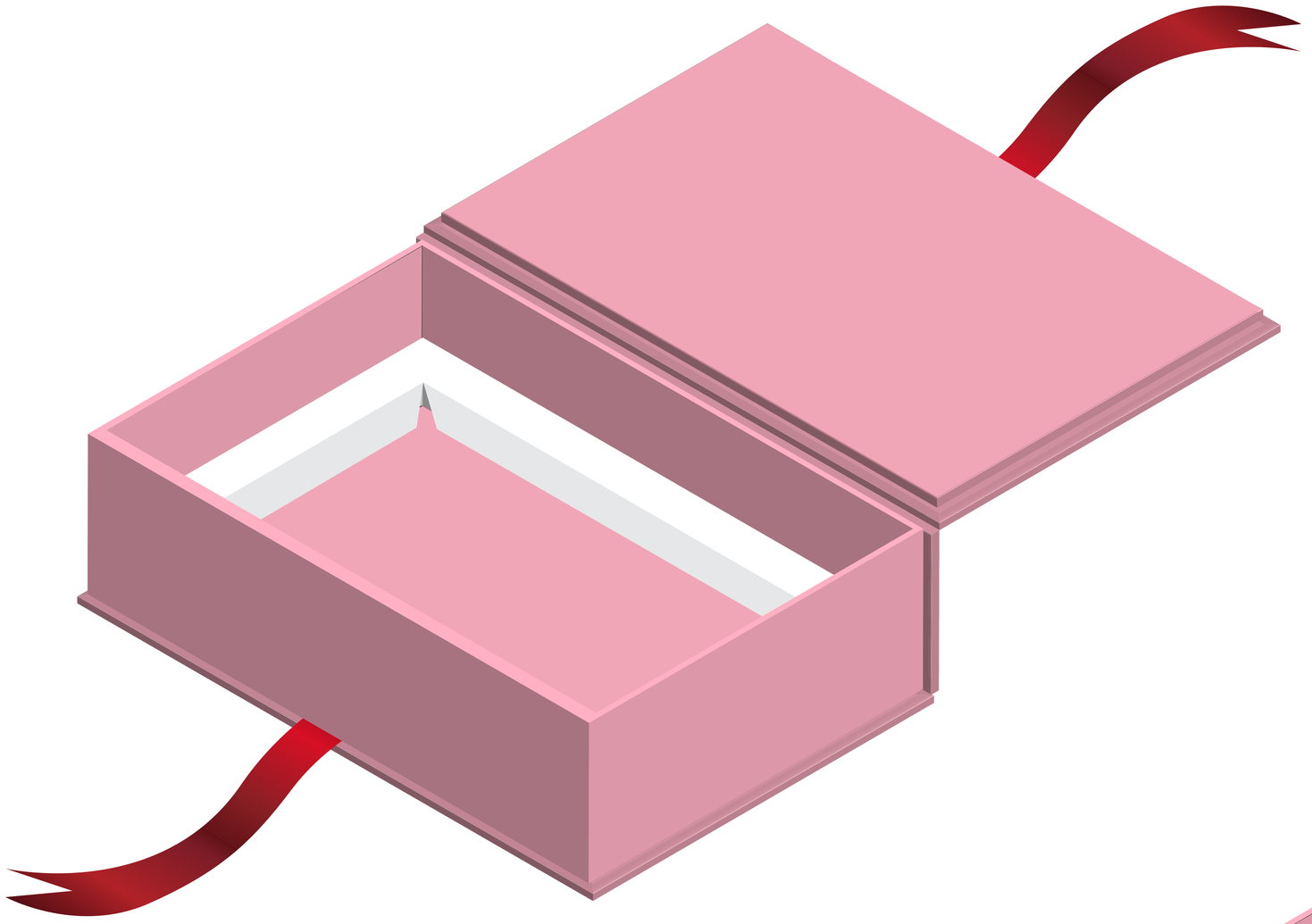

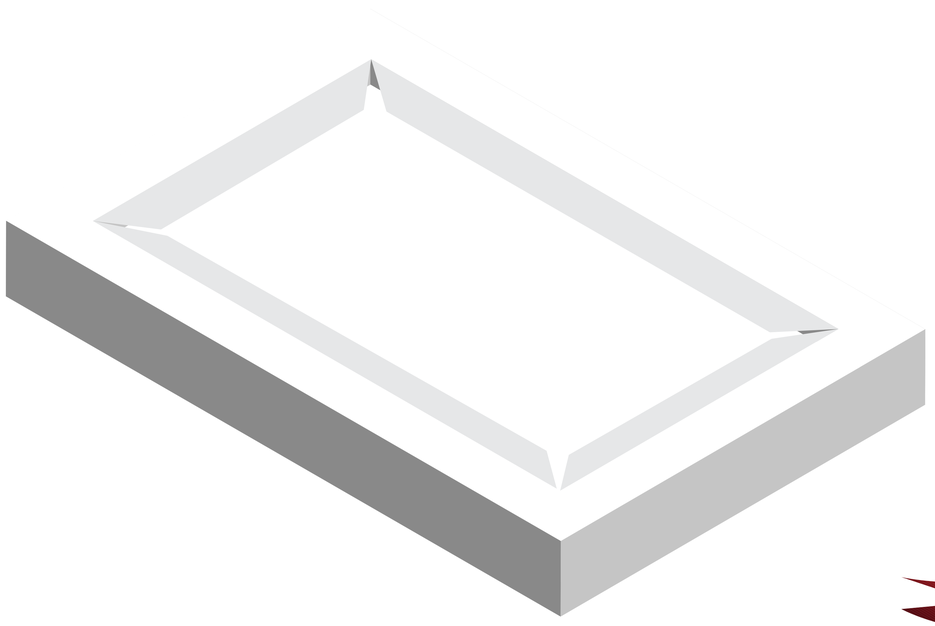

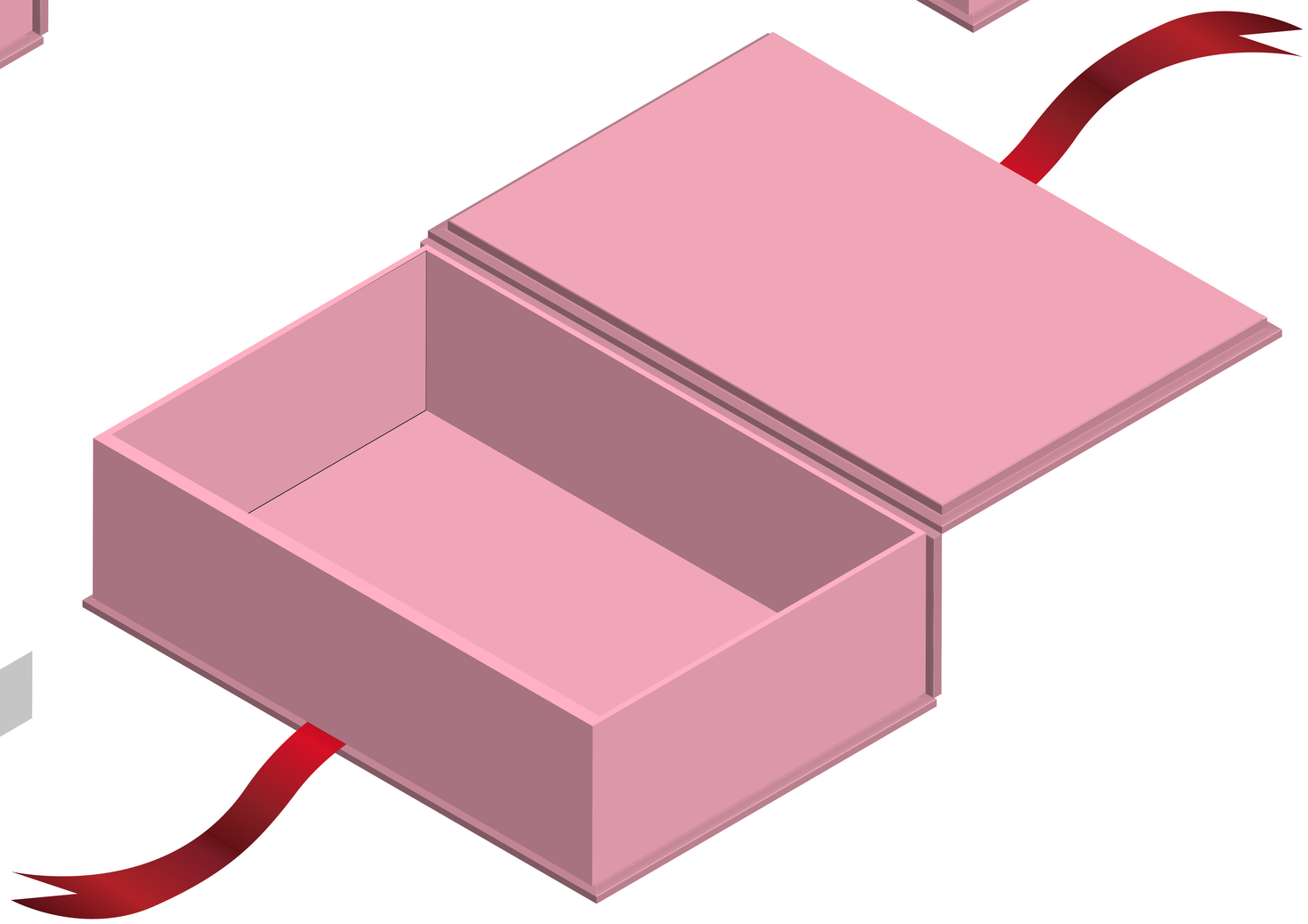

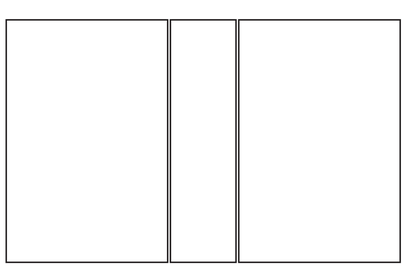

Hard Board Paper
Thick 0.198 cm
Cover Box

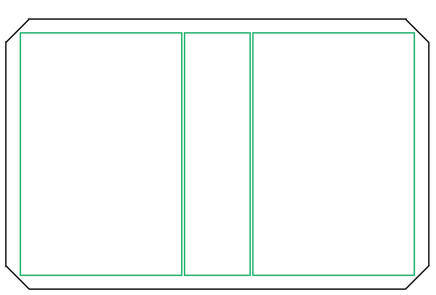

Wrapping Paper
Cover Box

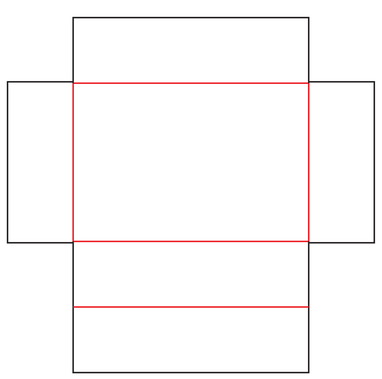

Hard Board Paper
Thick 0.198 cm
Box

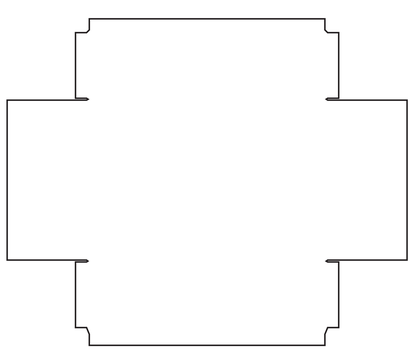

Wrapping Paper
Box

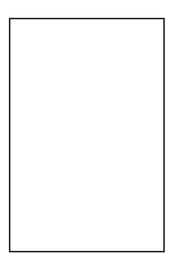

Hard Board Paper
Thick 0.198 cm
Cover Box Board

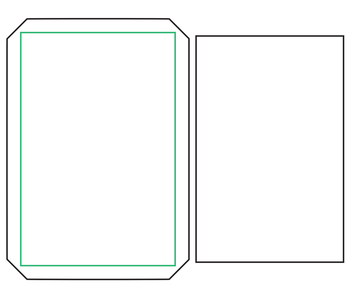

Wrapping Paper
Cover Box Board

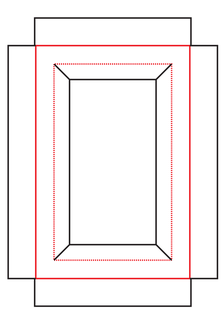

Hard Paper
300-350 gsm
Support Box

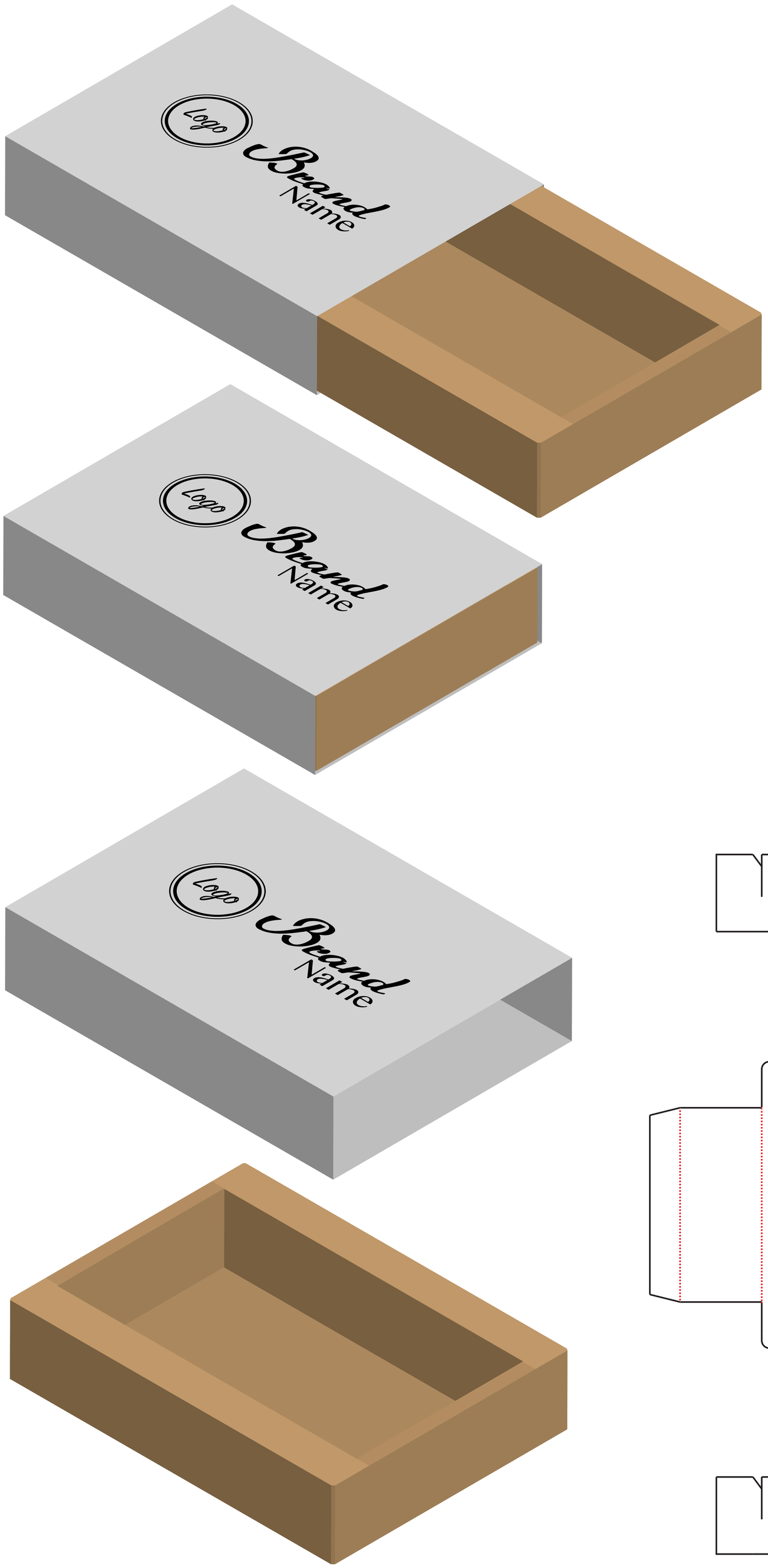

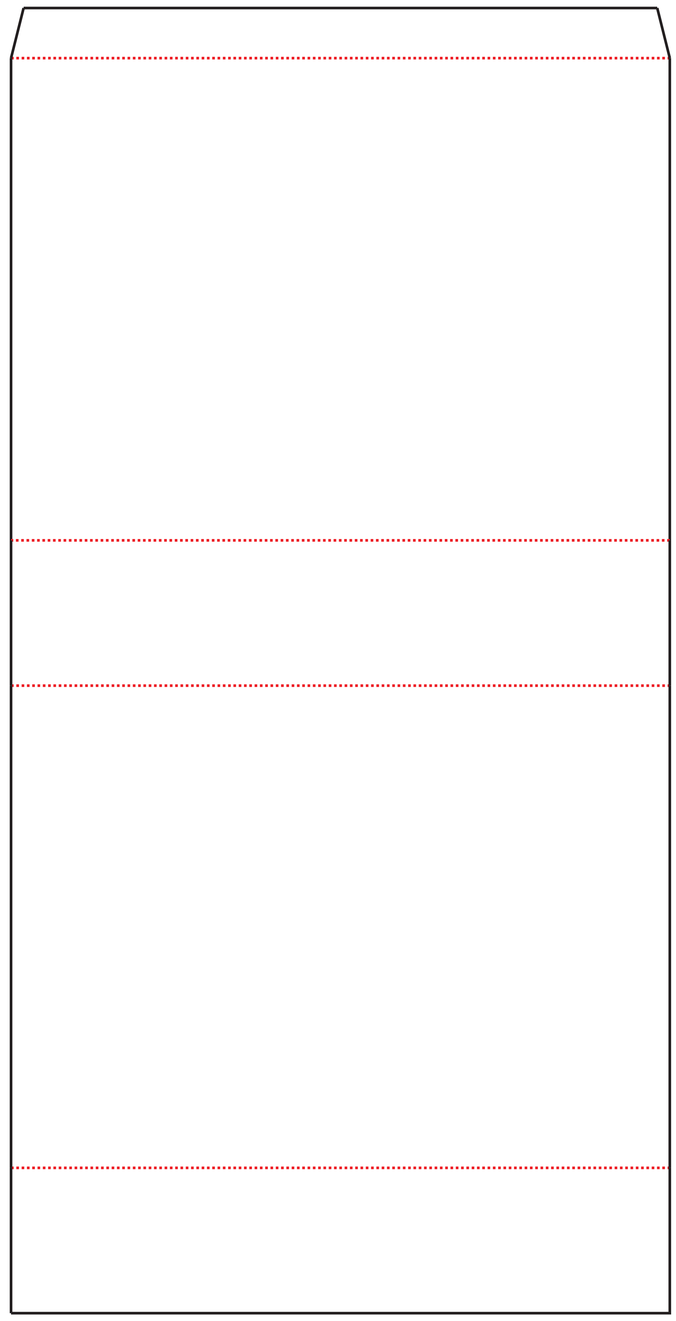

Hard Paper 200-350 gsm

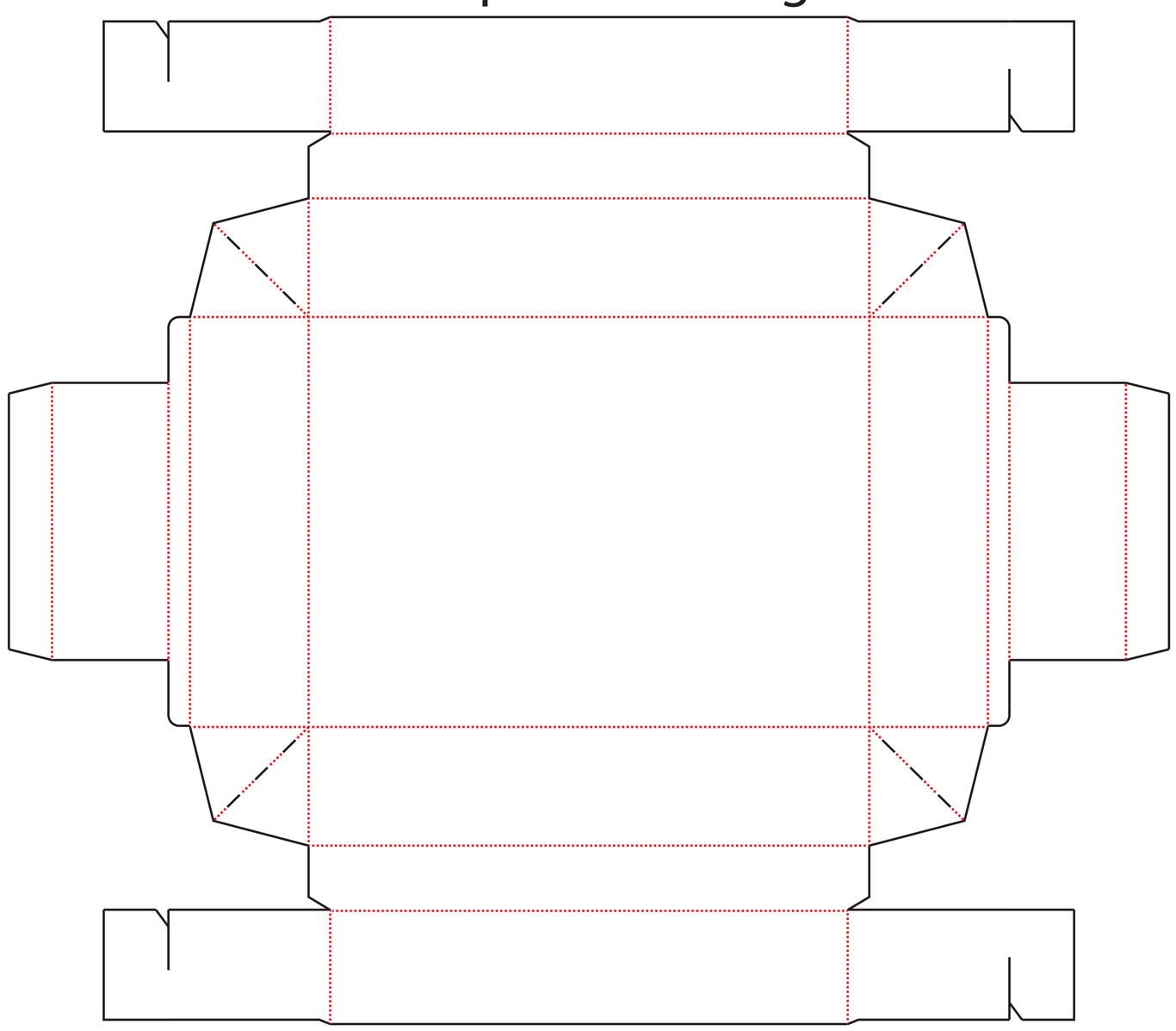

Hard Paper 250-350 gsm

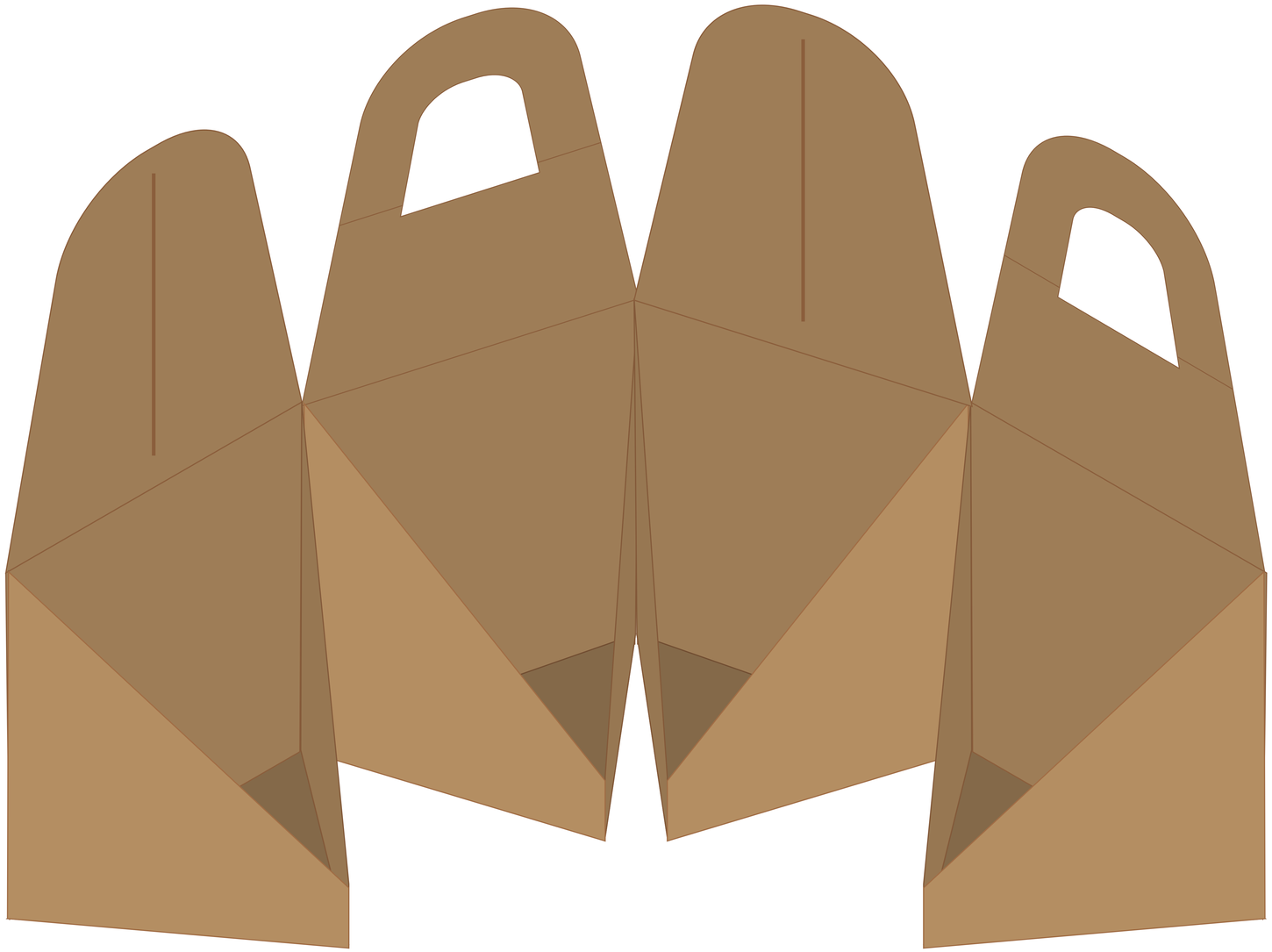

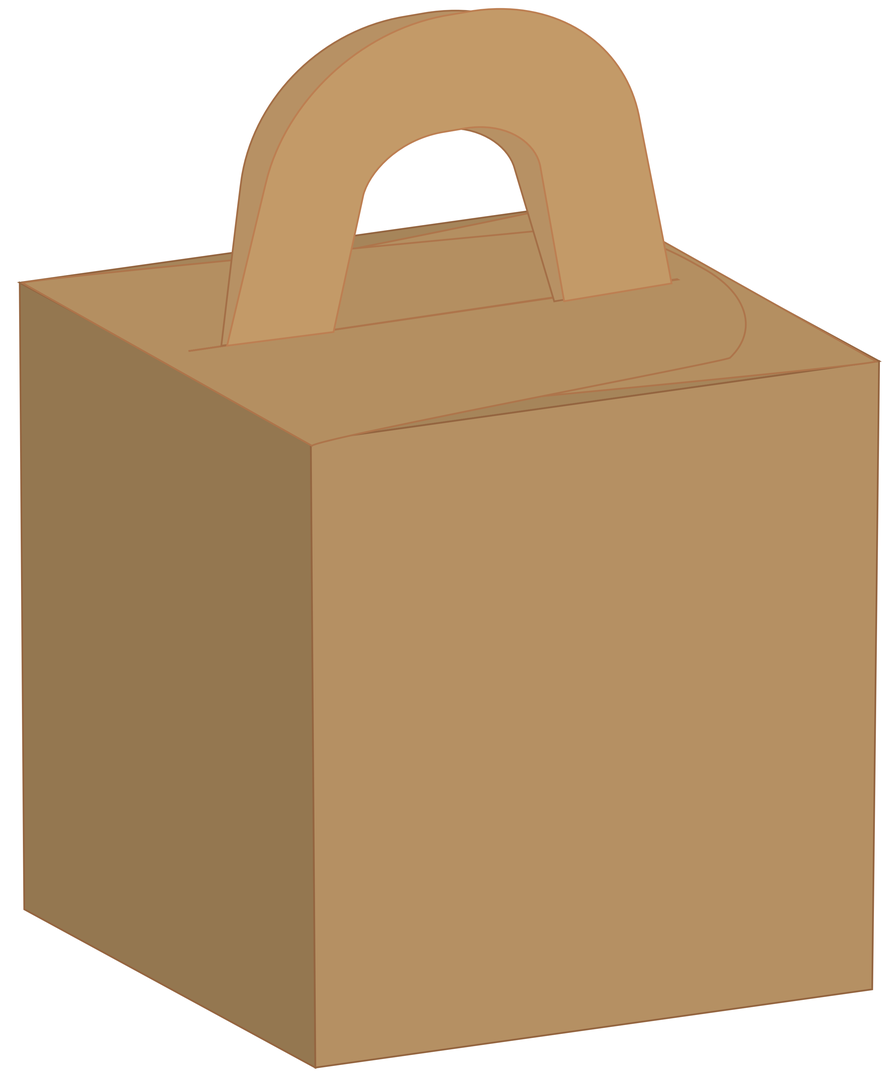

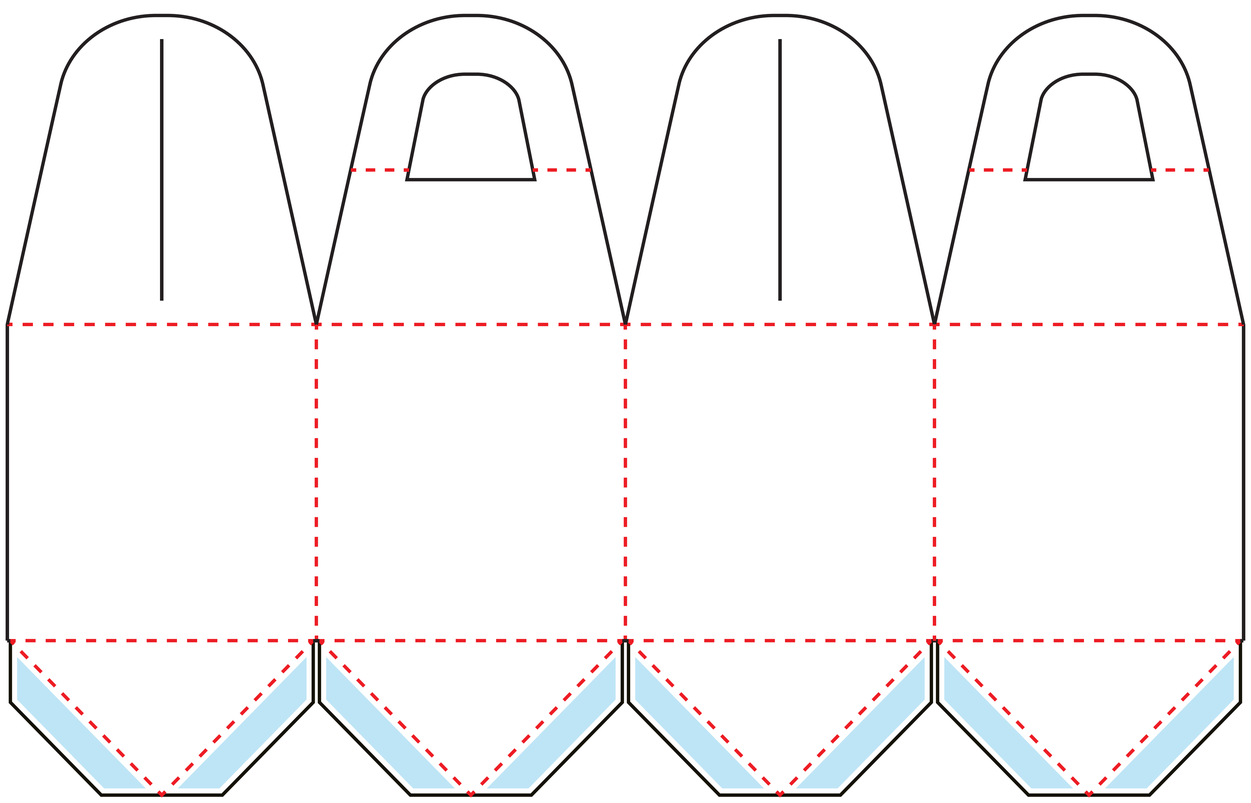

Hard Paper 200-350 gsm

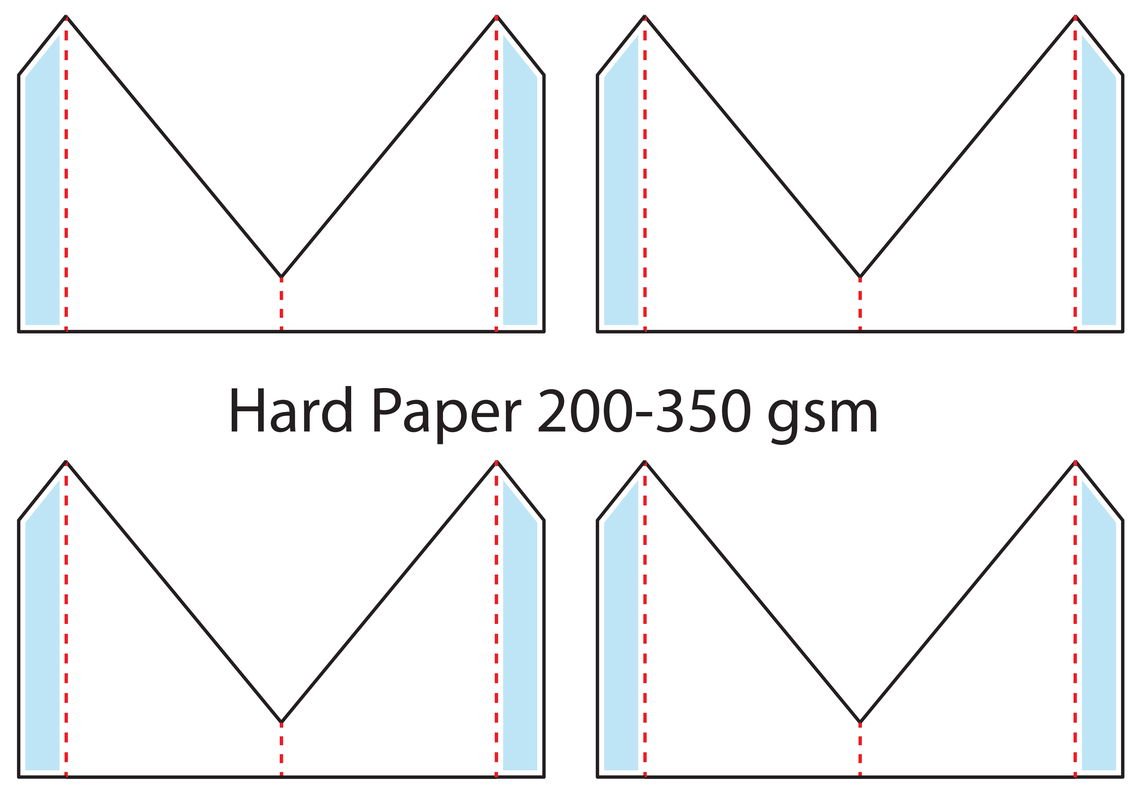

Hard Paper 200-350 gsm

GLUE TAB

Happy
Valentine's
Day

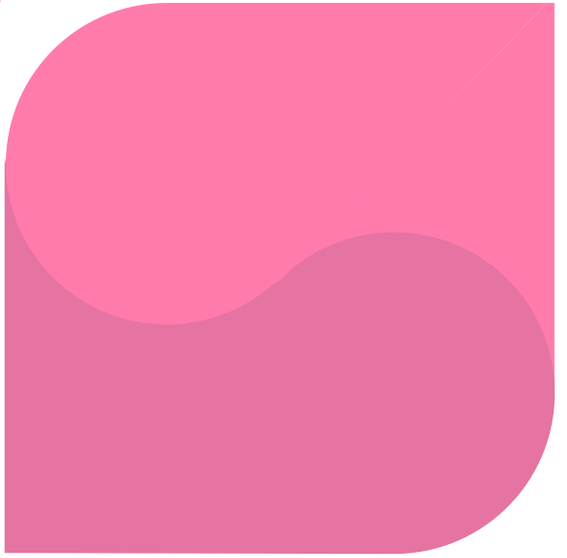

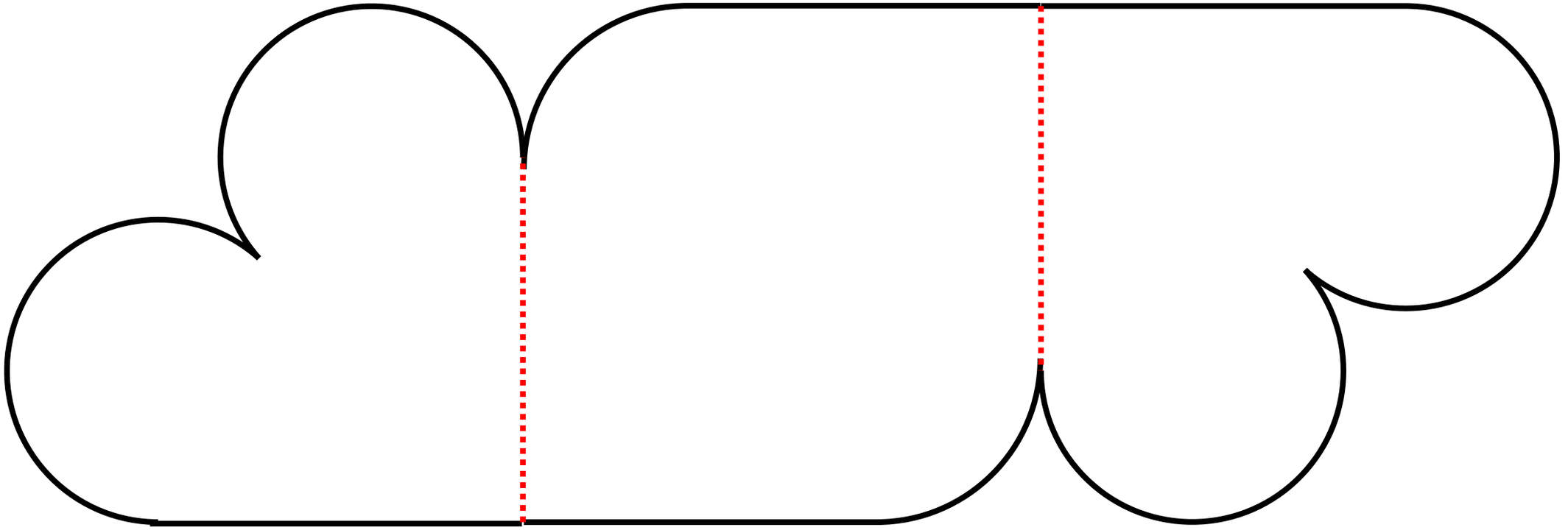

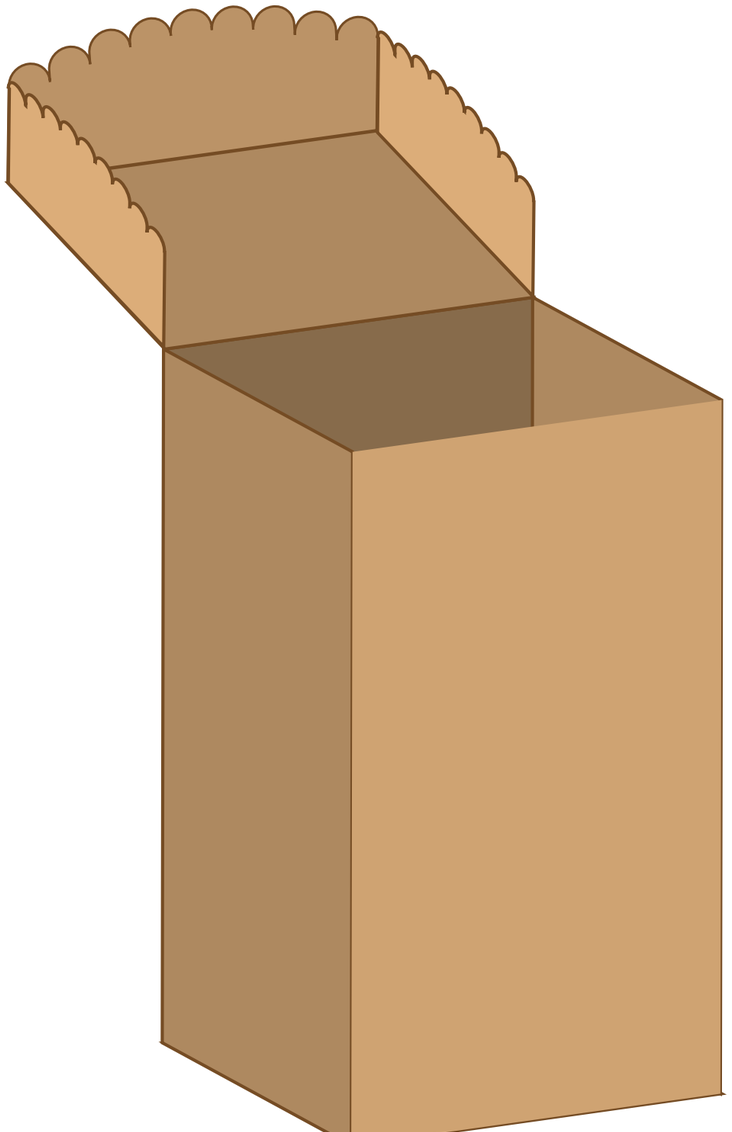

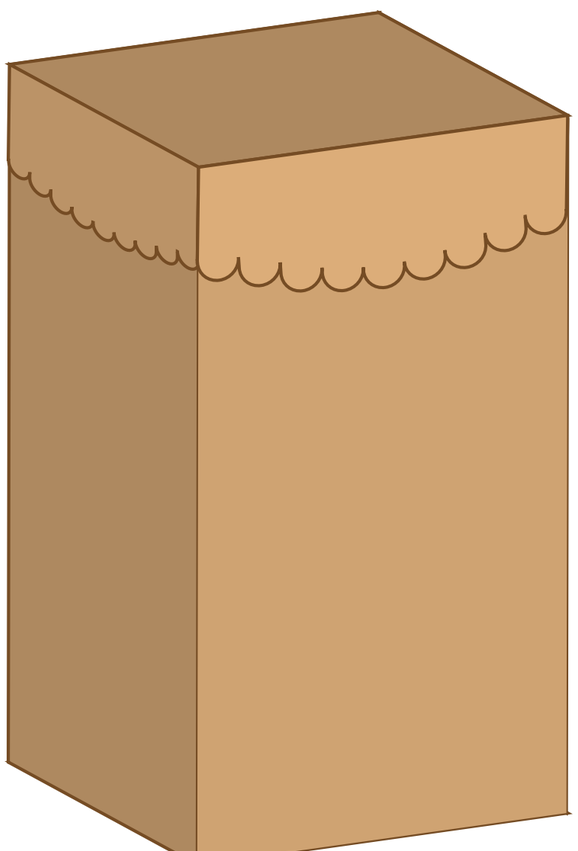

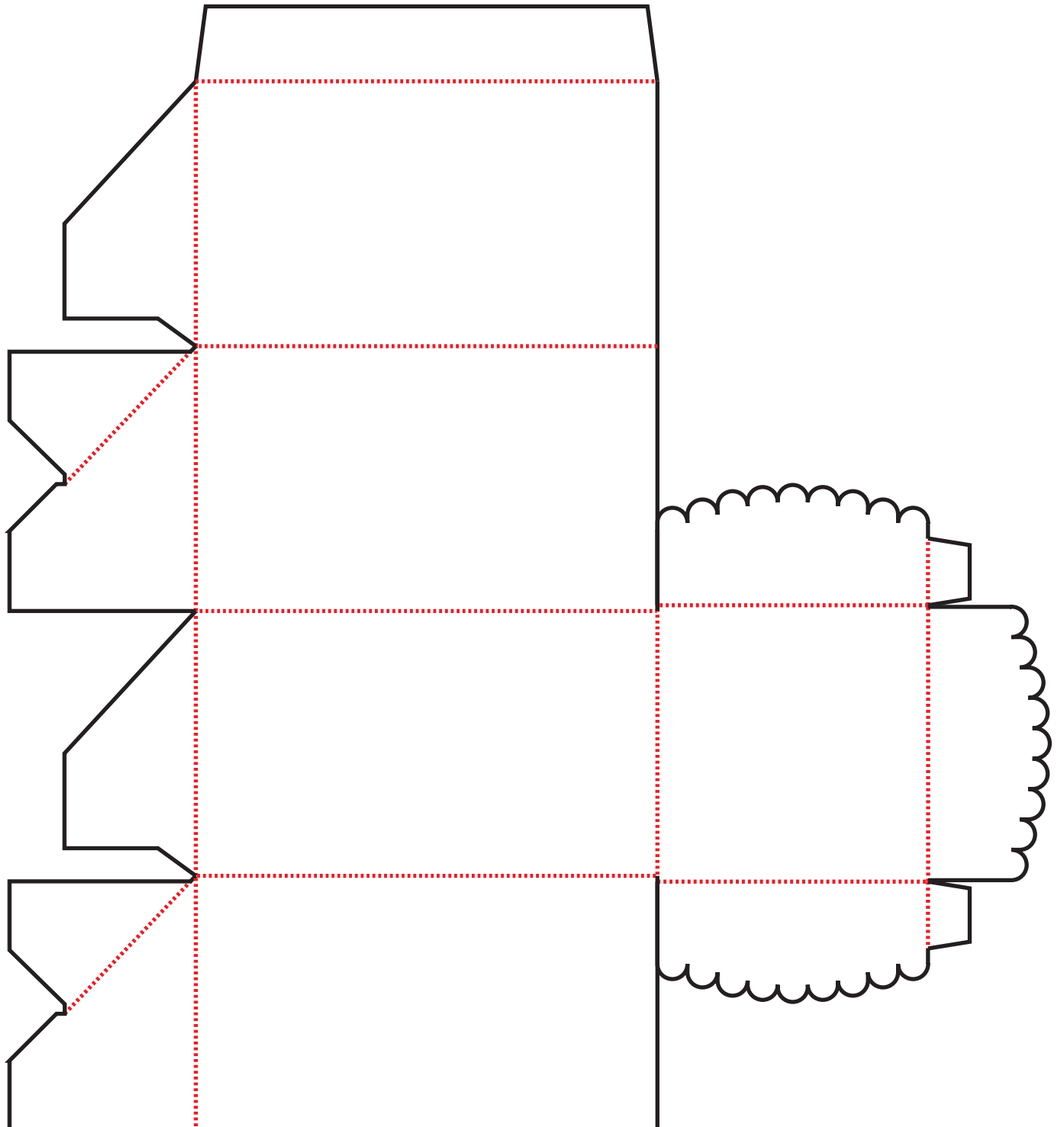

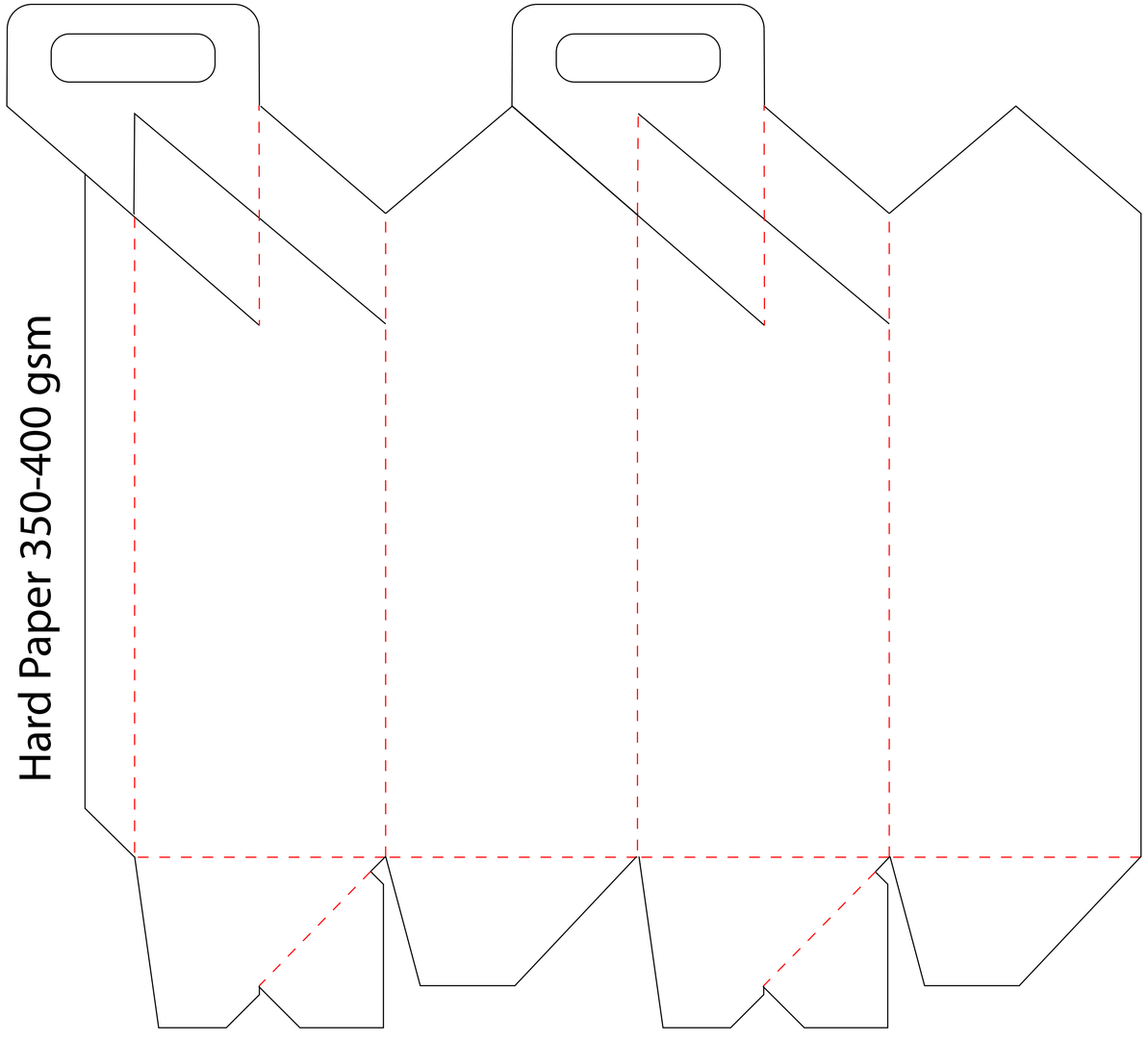
Hard Paper 350-400 gsm

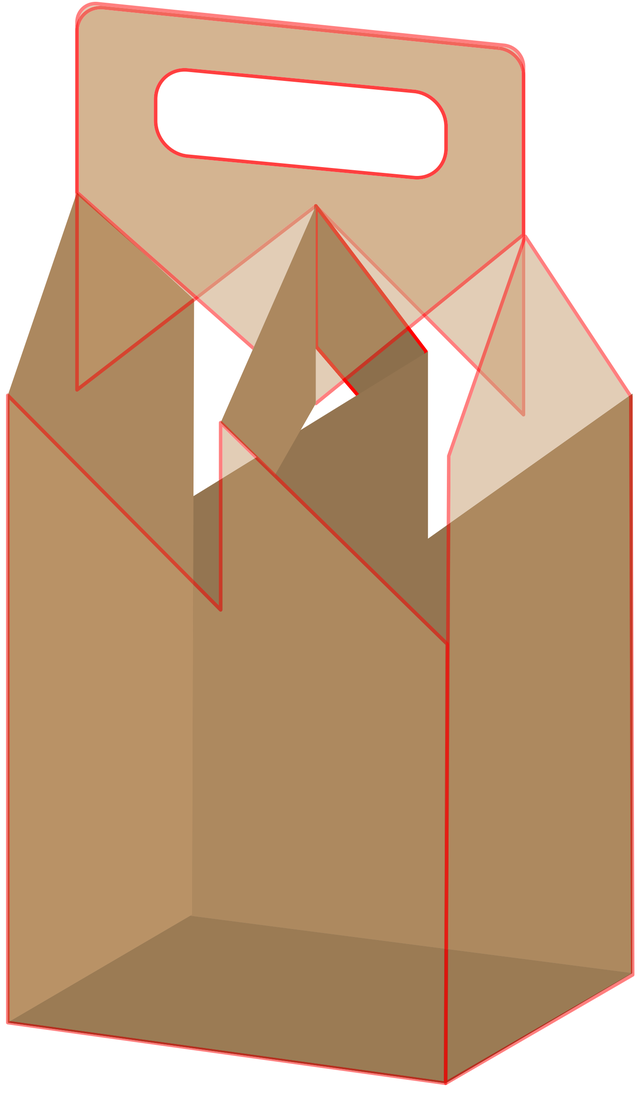

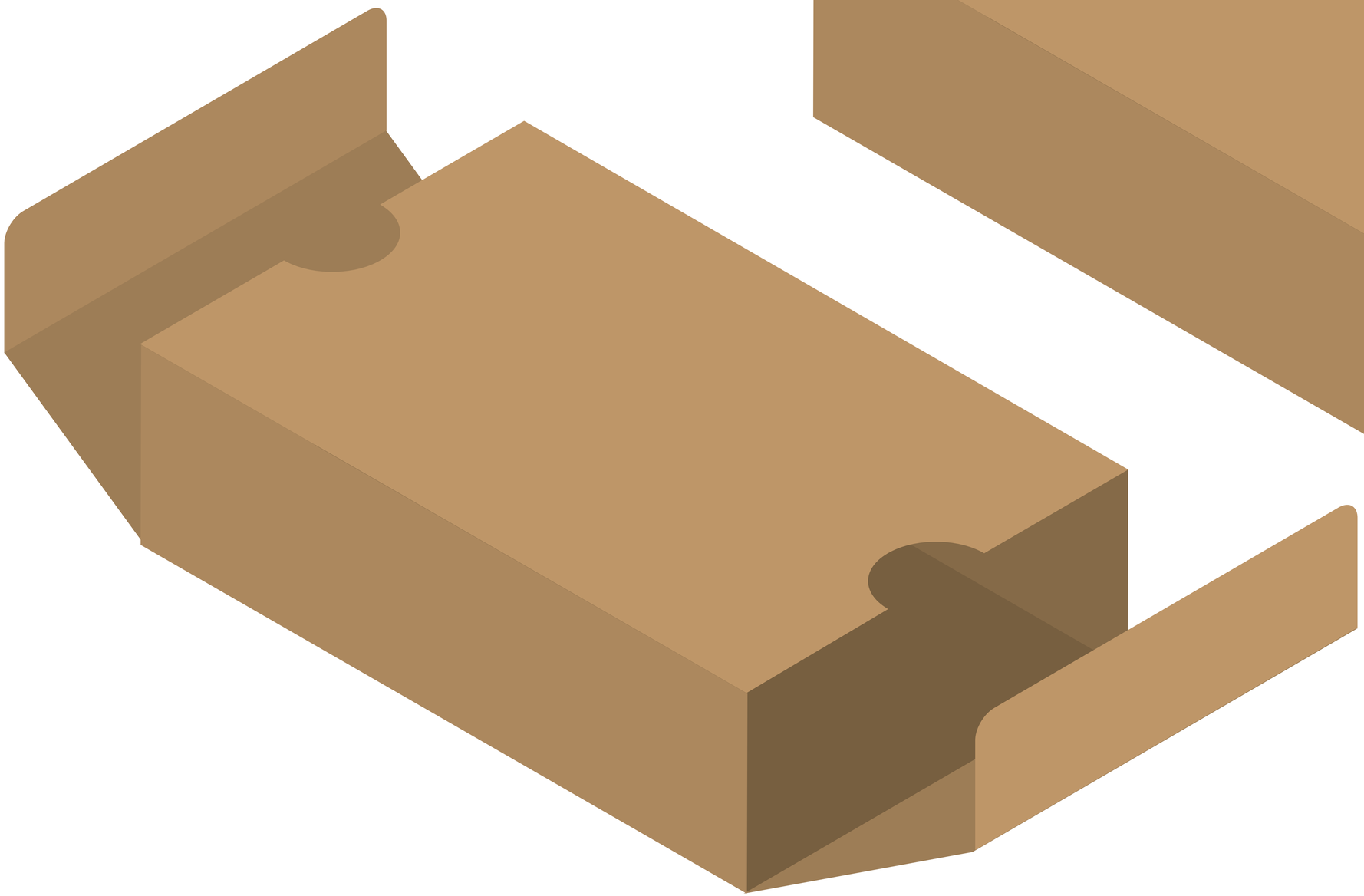

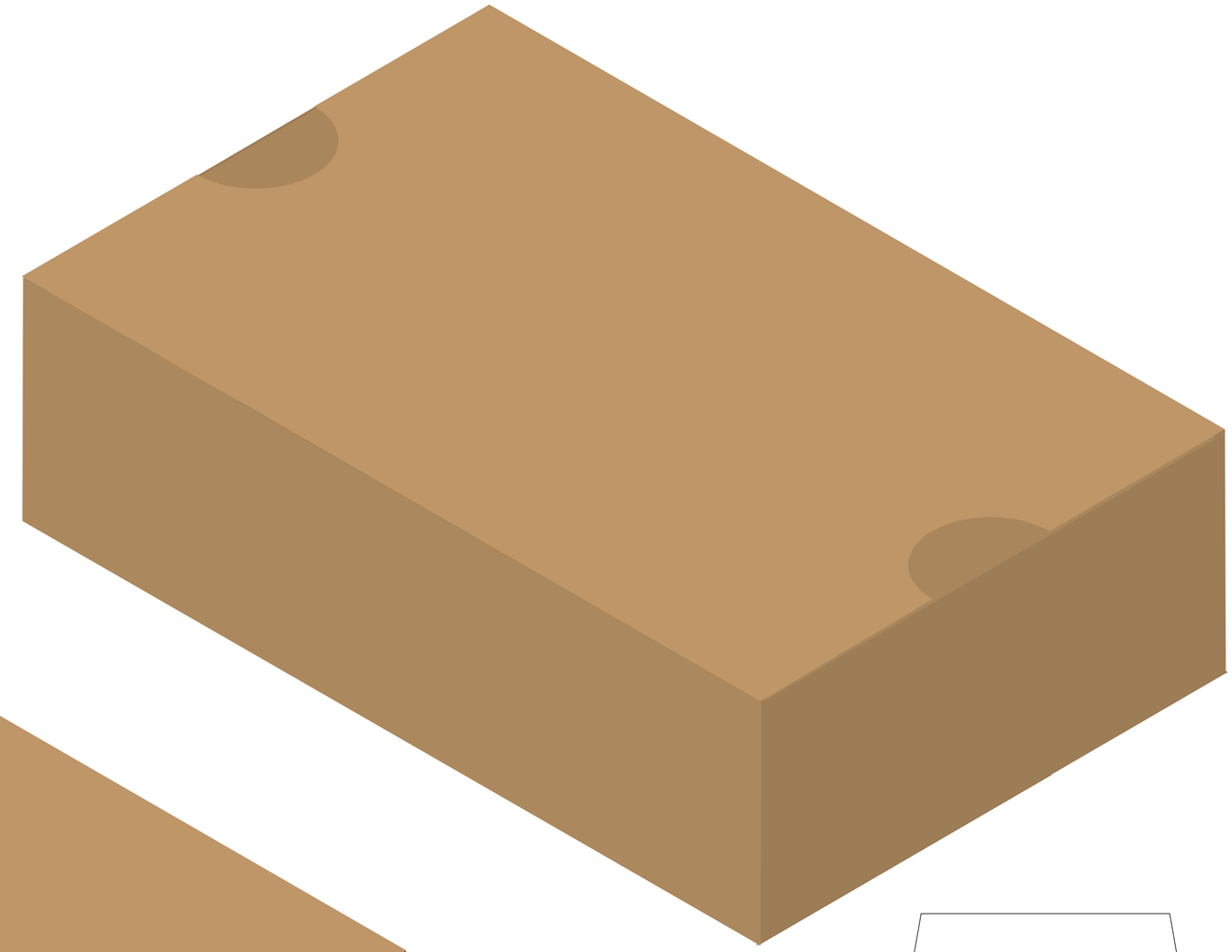

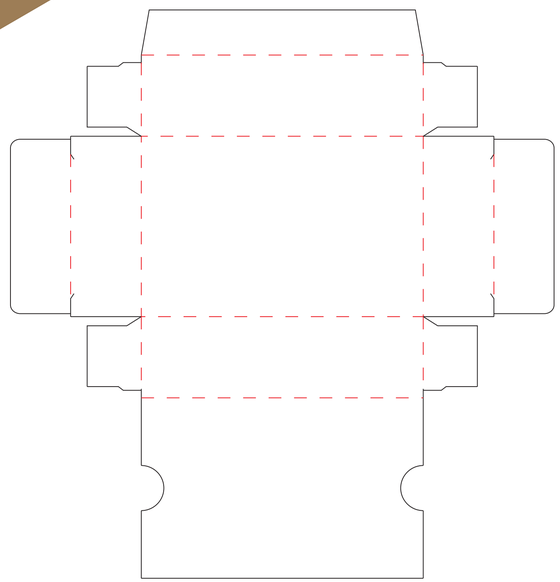

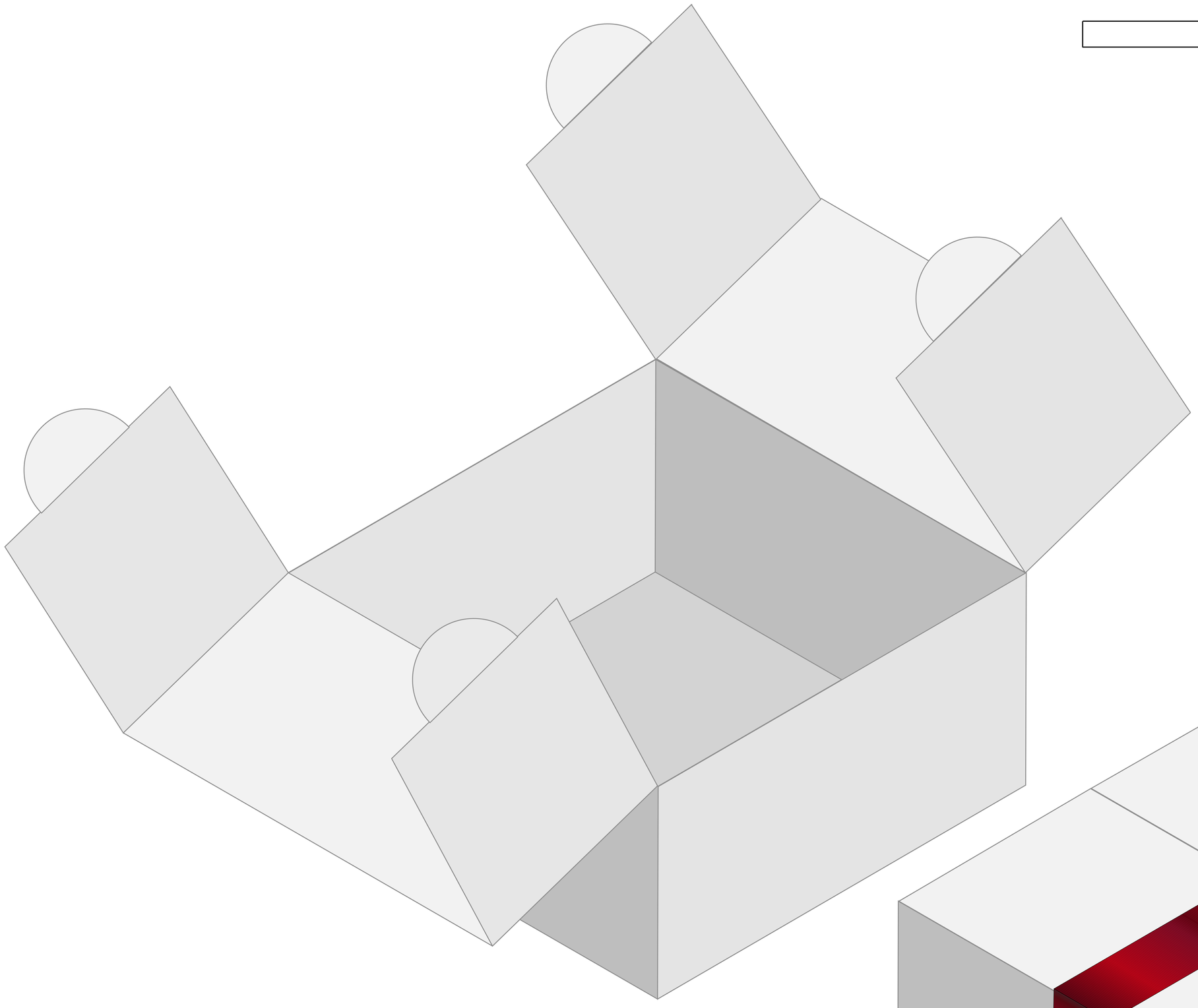

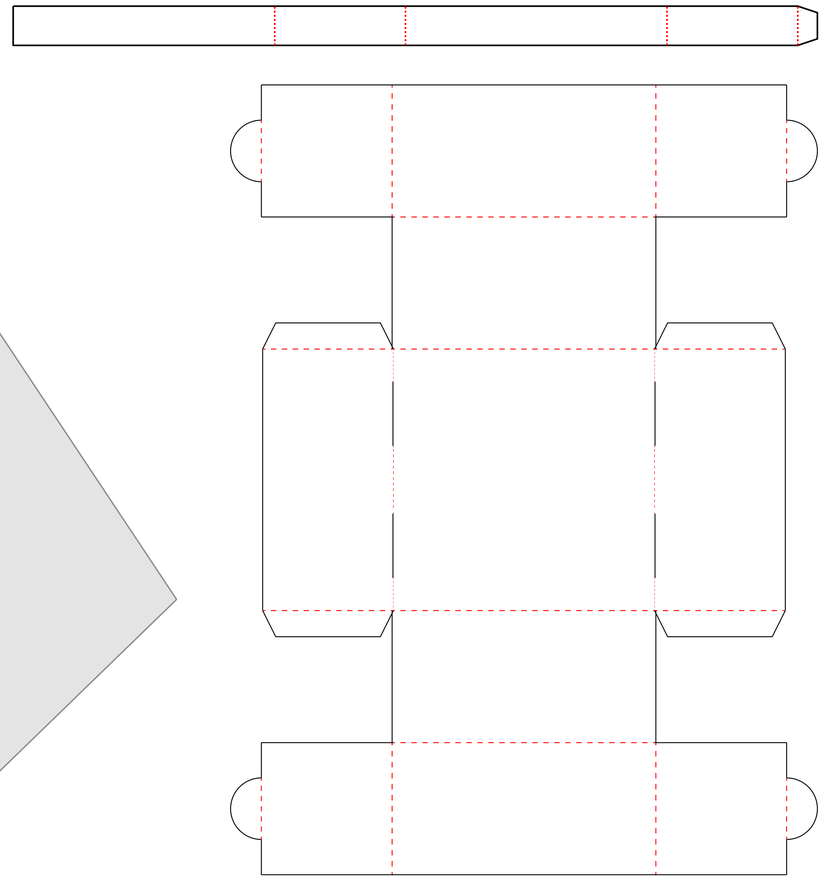

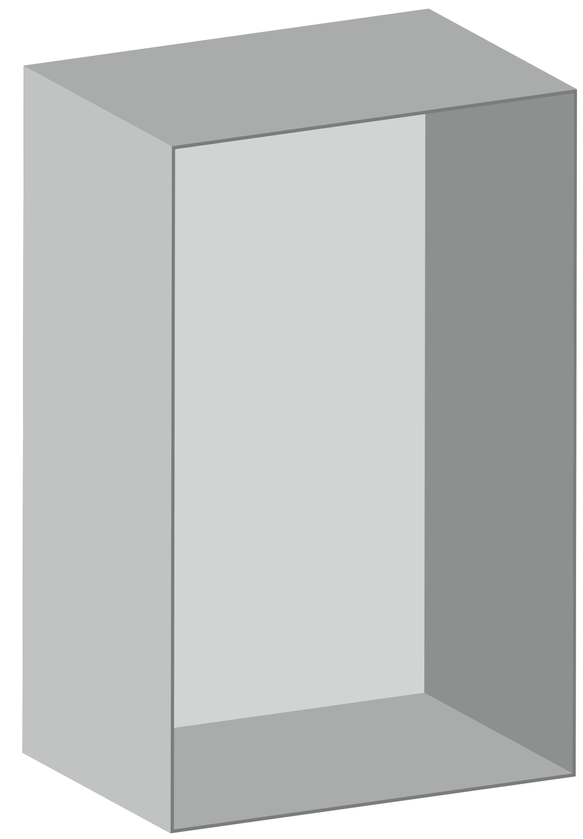

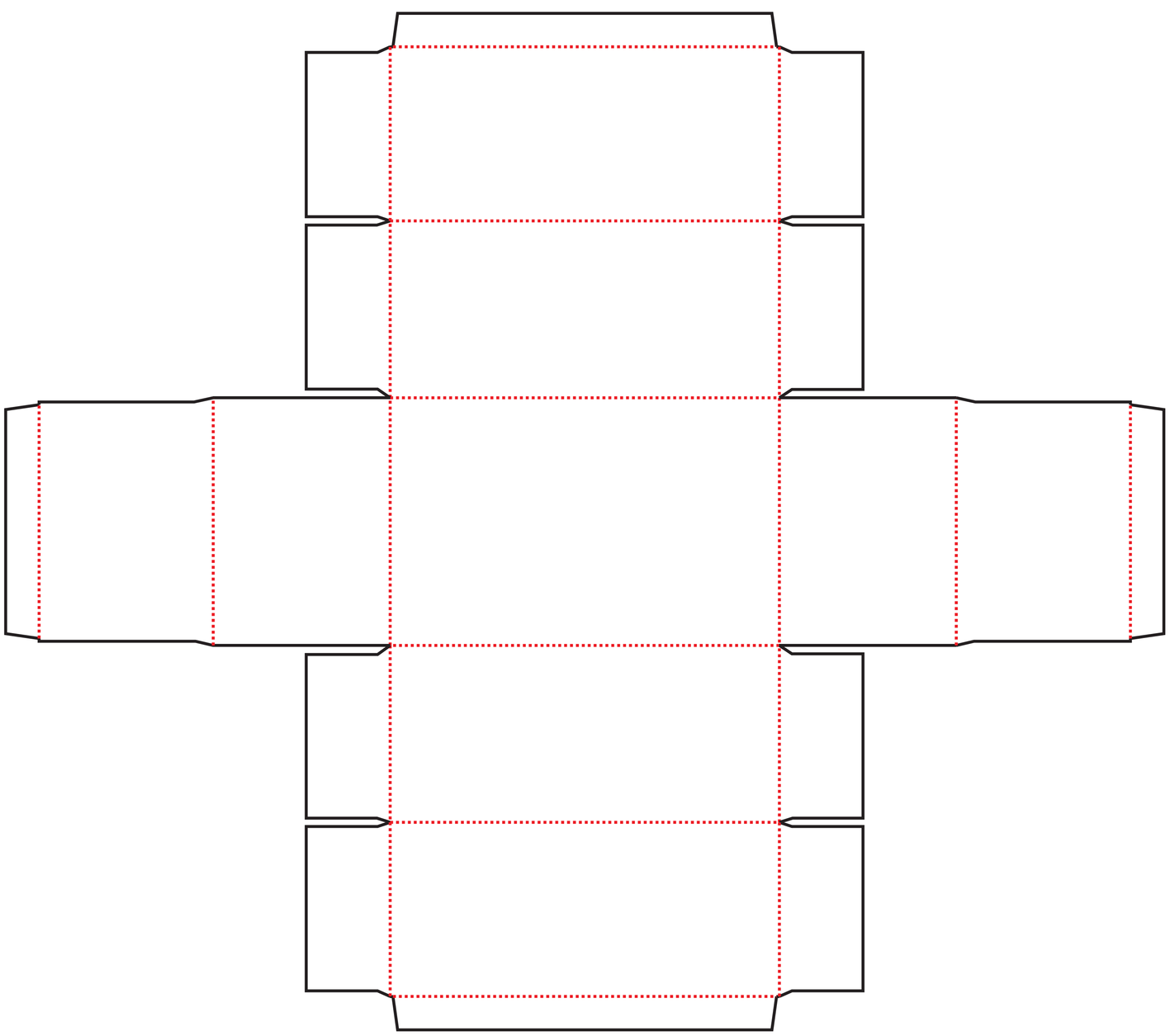

Hard Paper 250-350 gsm

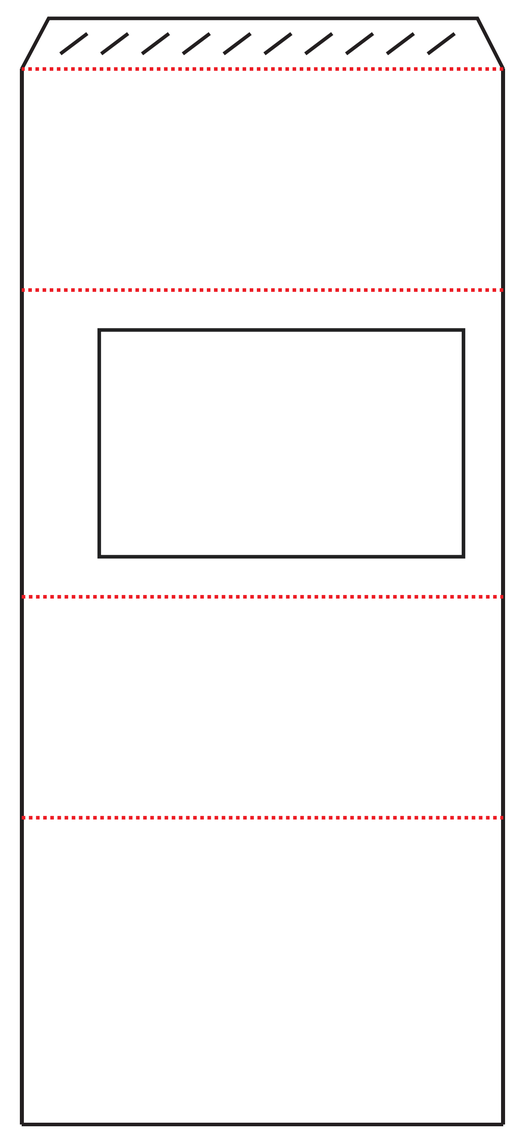

Hard Paper 250-350 gsm

Plastic Sheet
150 micron

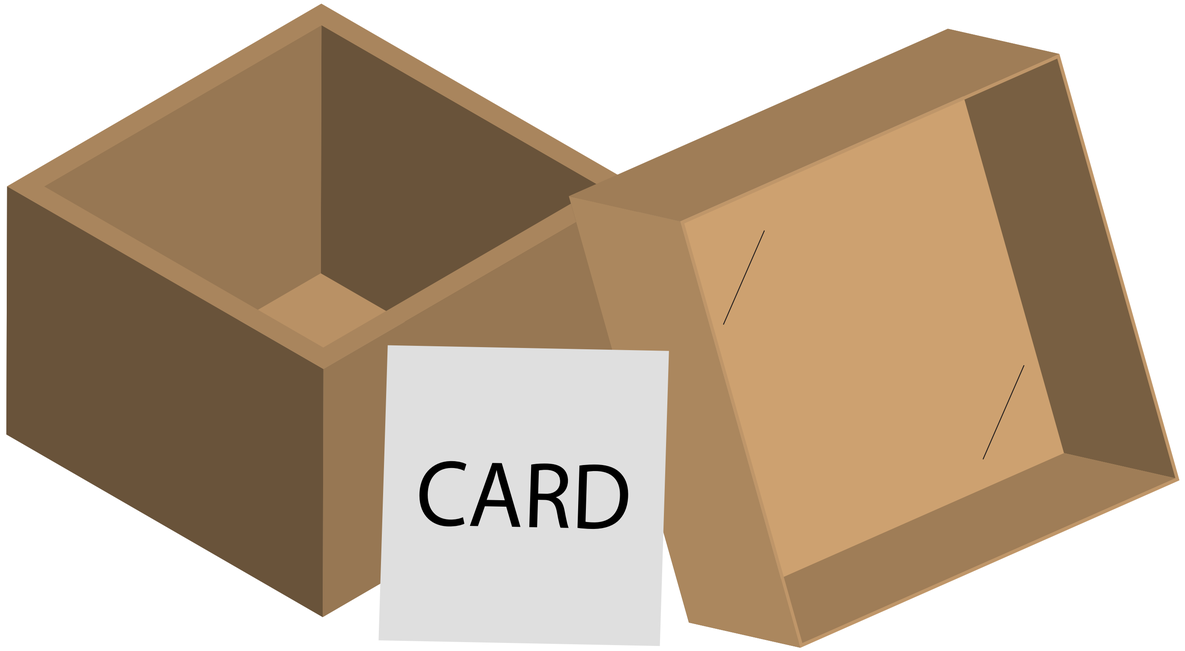

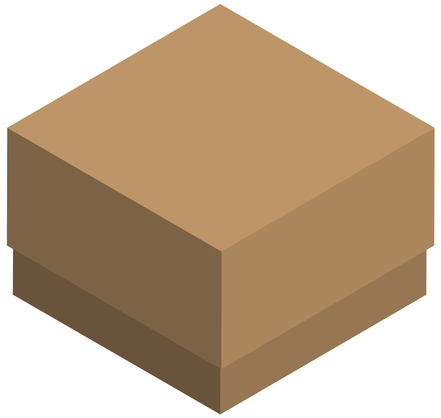

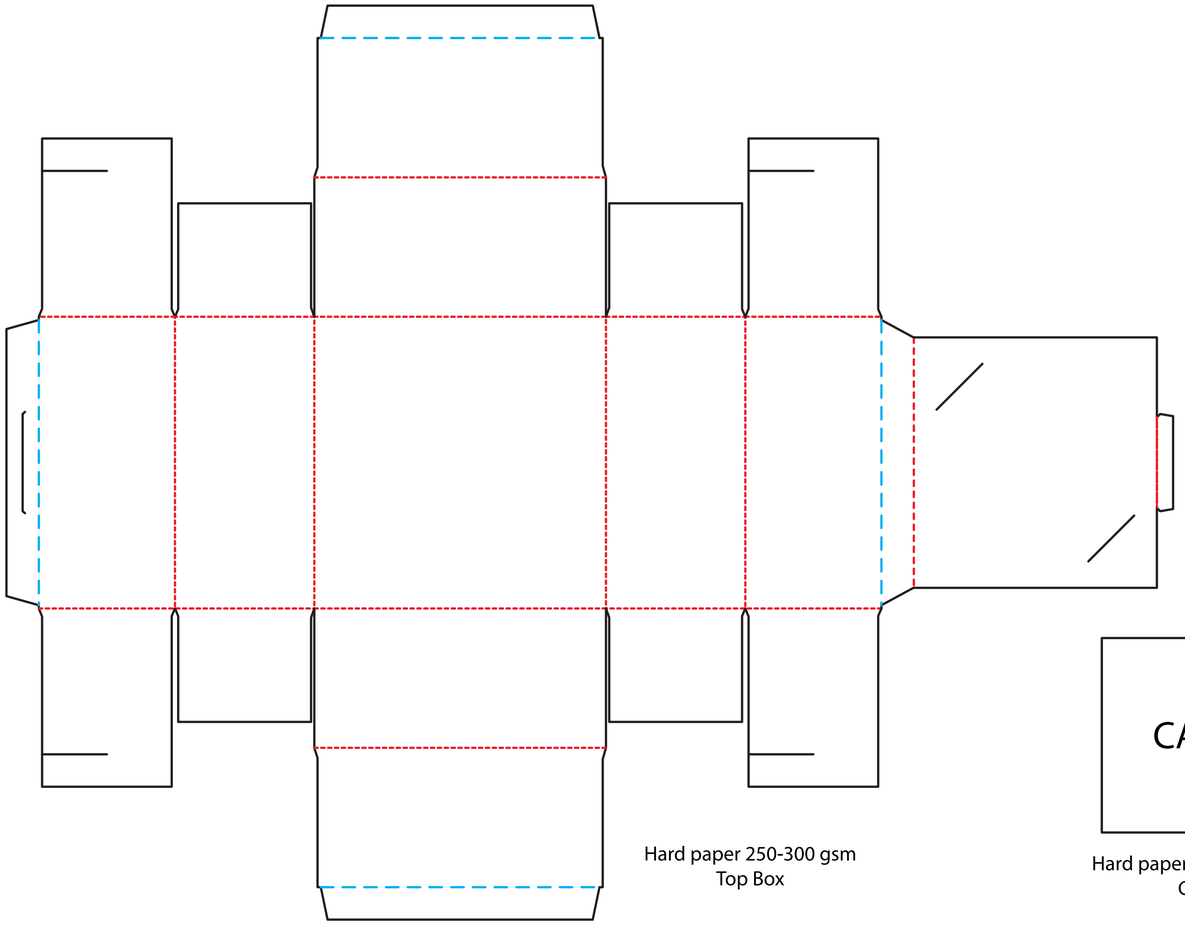

Hard paper 250-300 gsm
Top Box

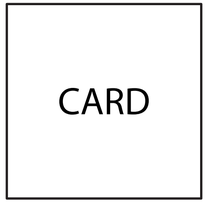

Hard paper 200-300 gsm
Card

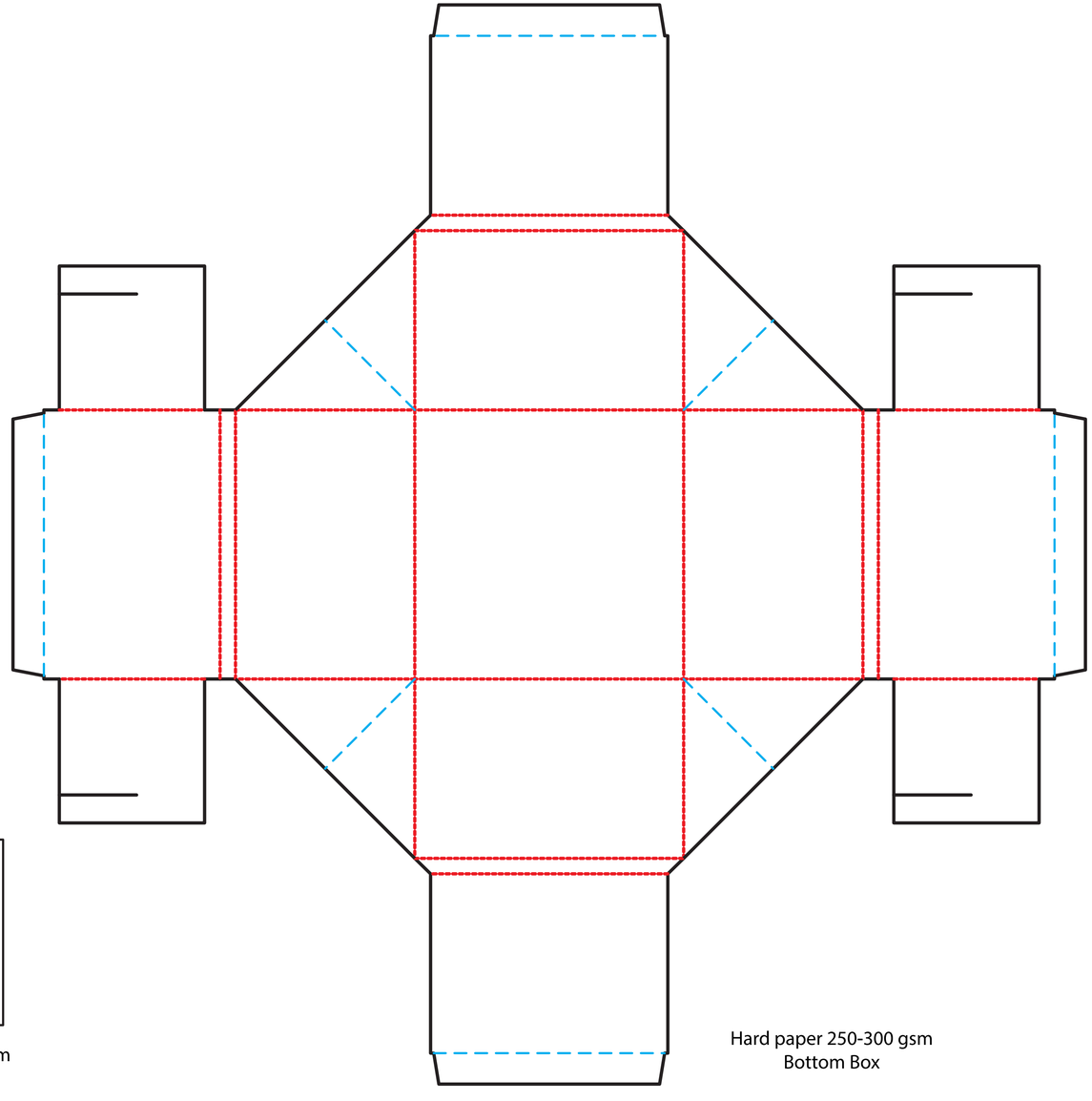

Hard paper 250-300 gsm
Bottom Box

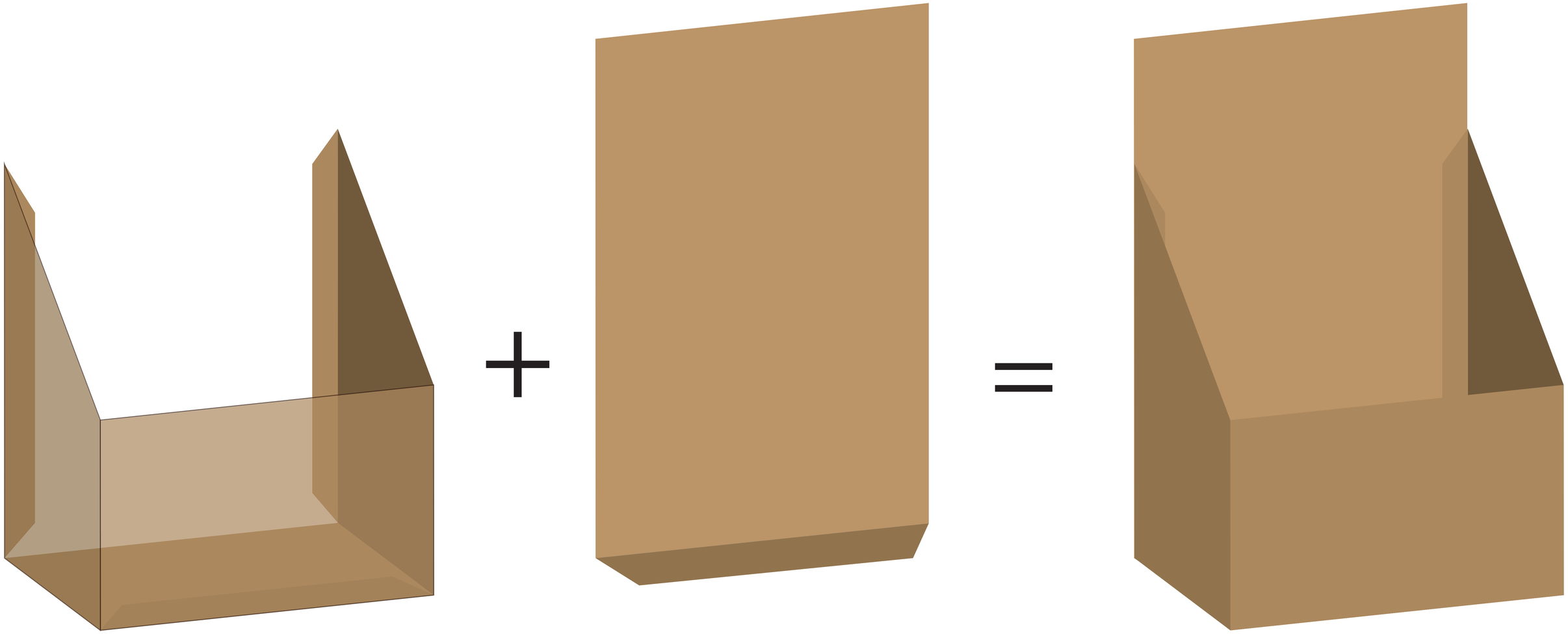

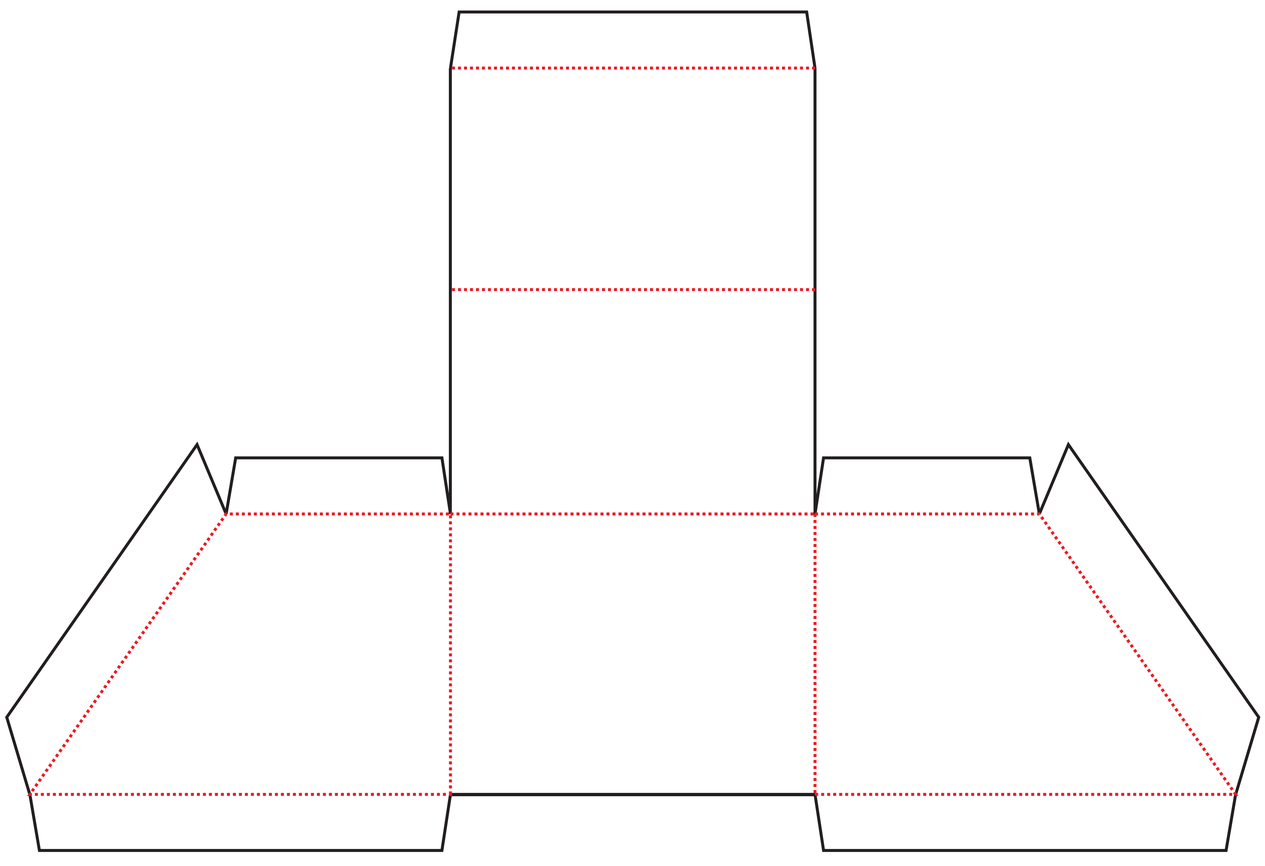

Hard Paper 300-350 gsm

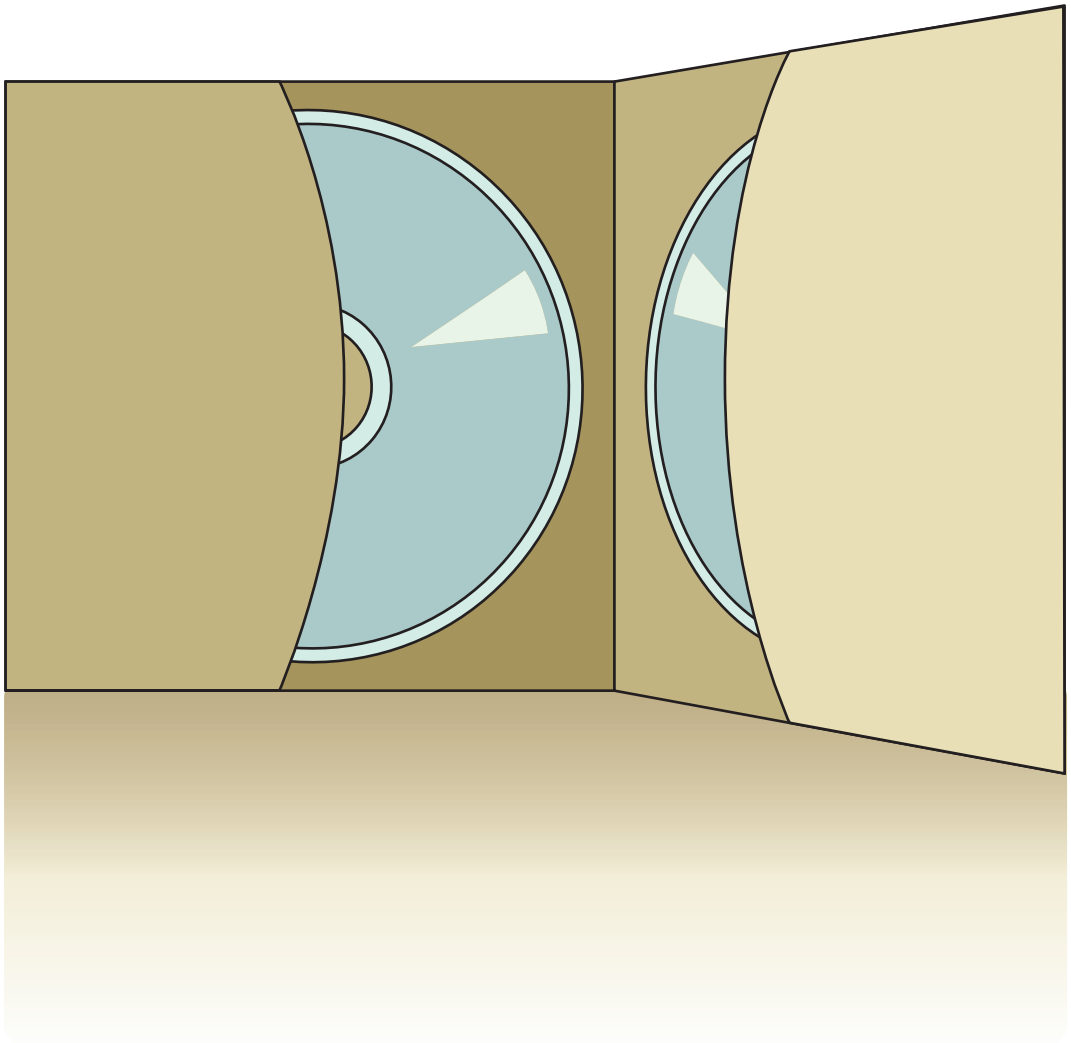

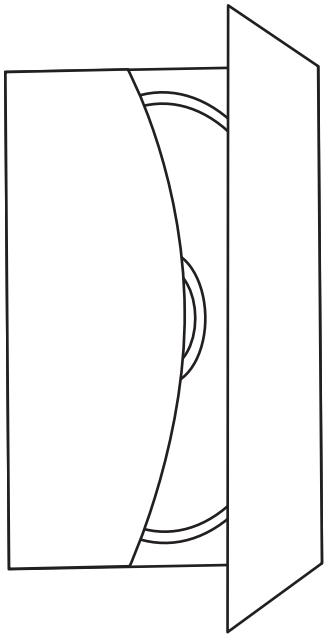

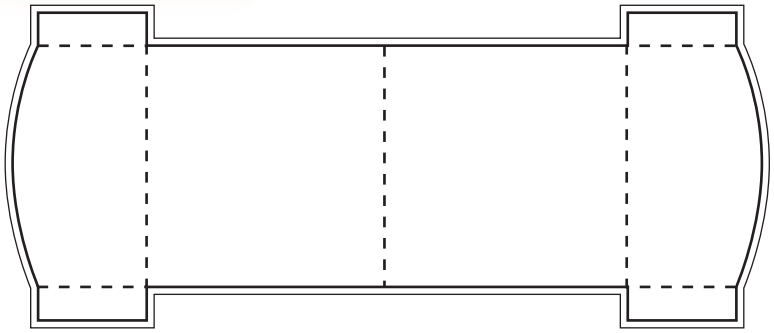

printing bleed

die-cuting line

folding line

perforaion line

zipper line

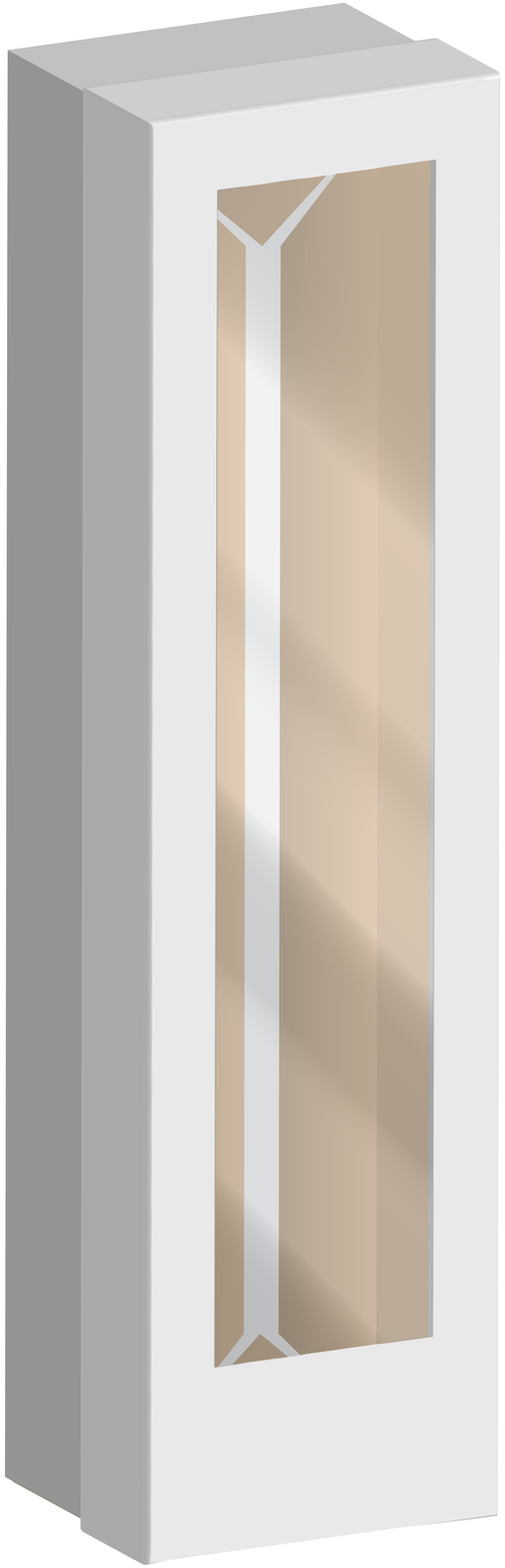

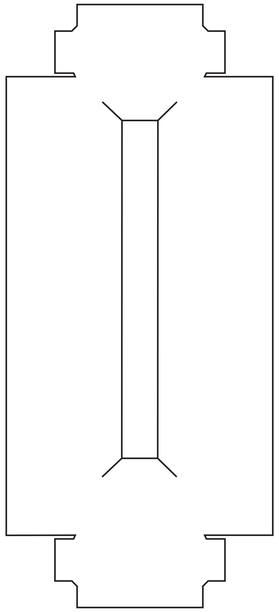

Wrapping Paper
Top Box

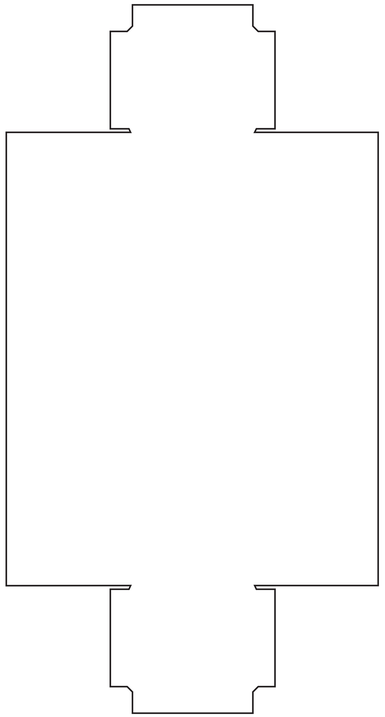

Wrapping Paper
Bottom Box

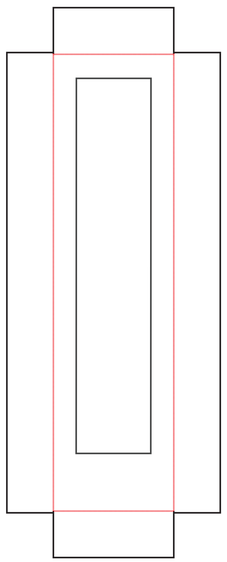

Hard Board Paper
Thick 0.2 cm
Top Box

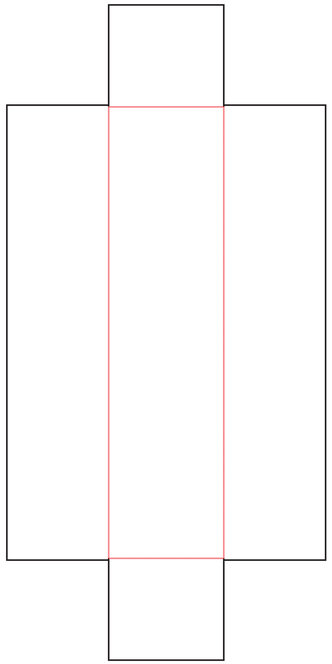

Hard Board Paper
Thick 0.2 cm
Bottom Box

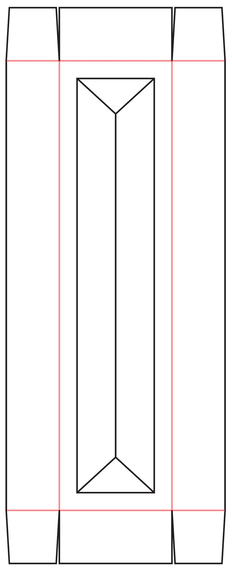

Hard Paper
300-350 gsm
Product Support

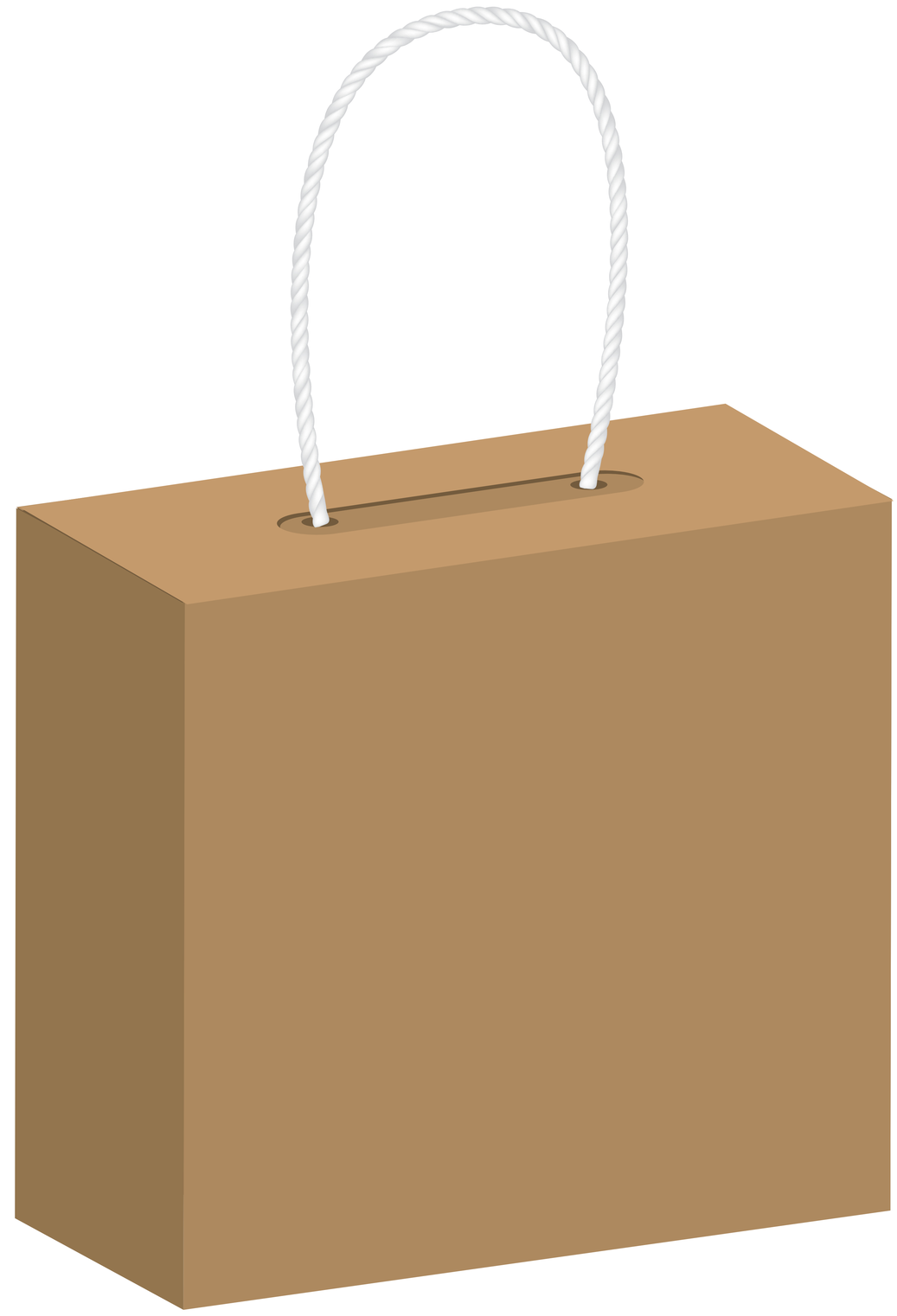

Corrugated Paper E Flute

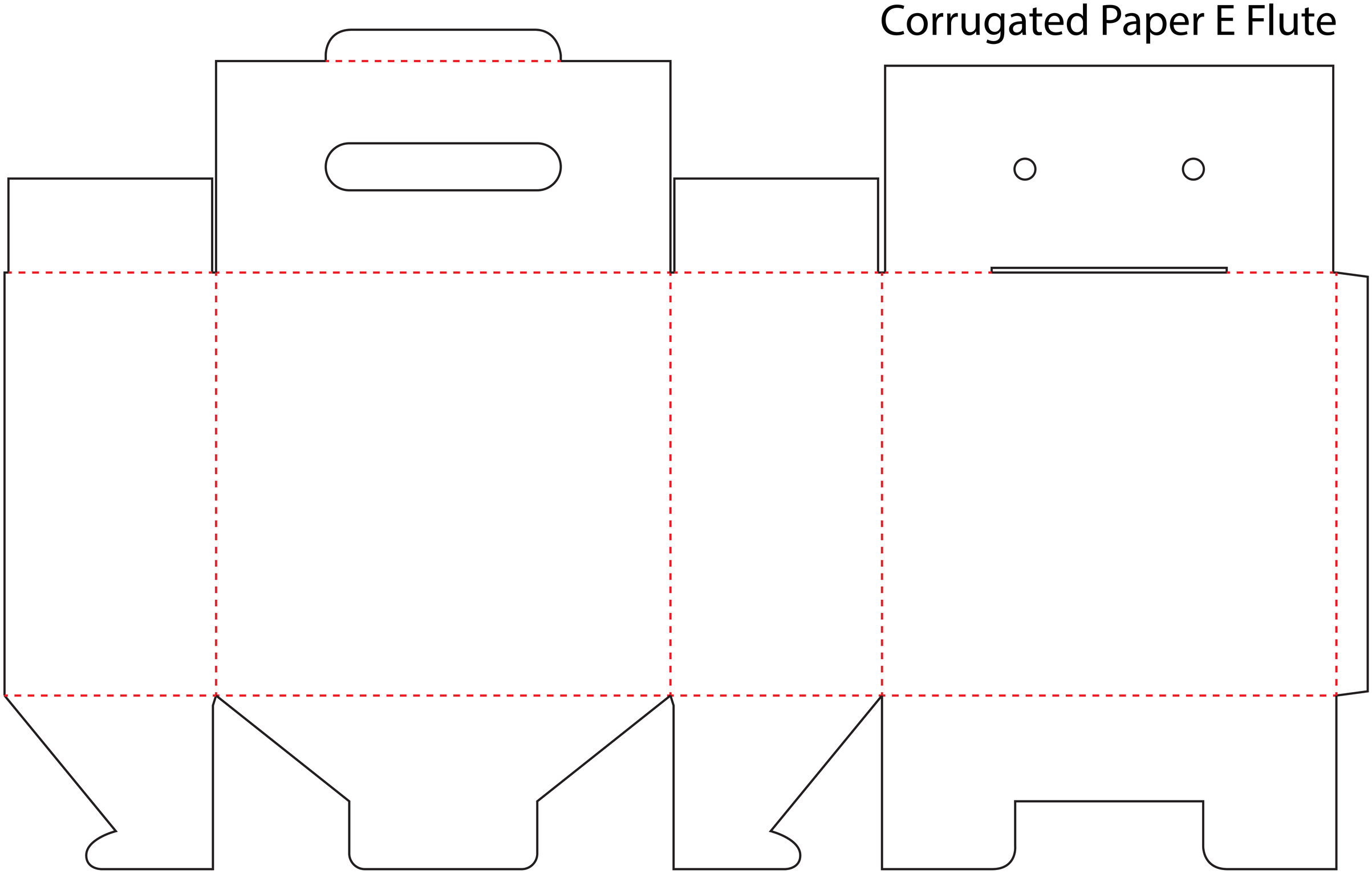

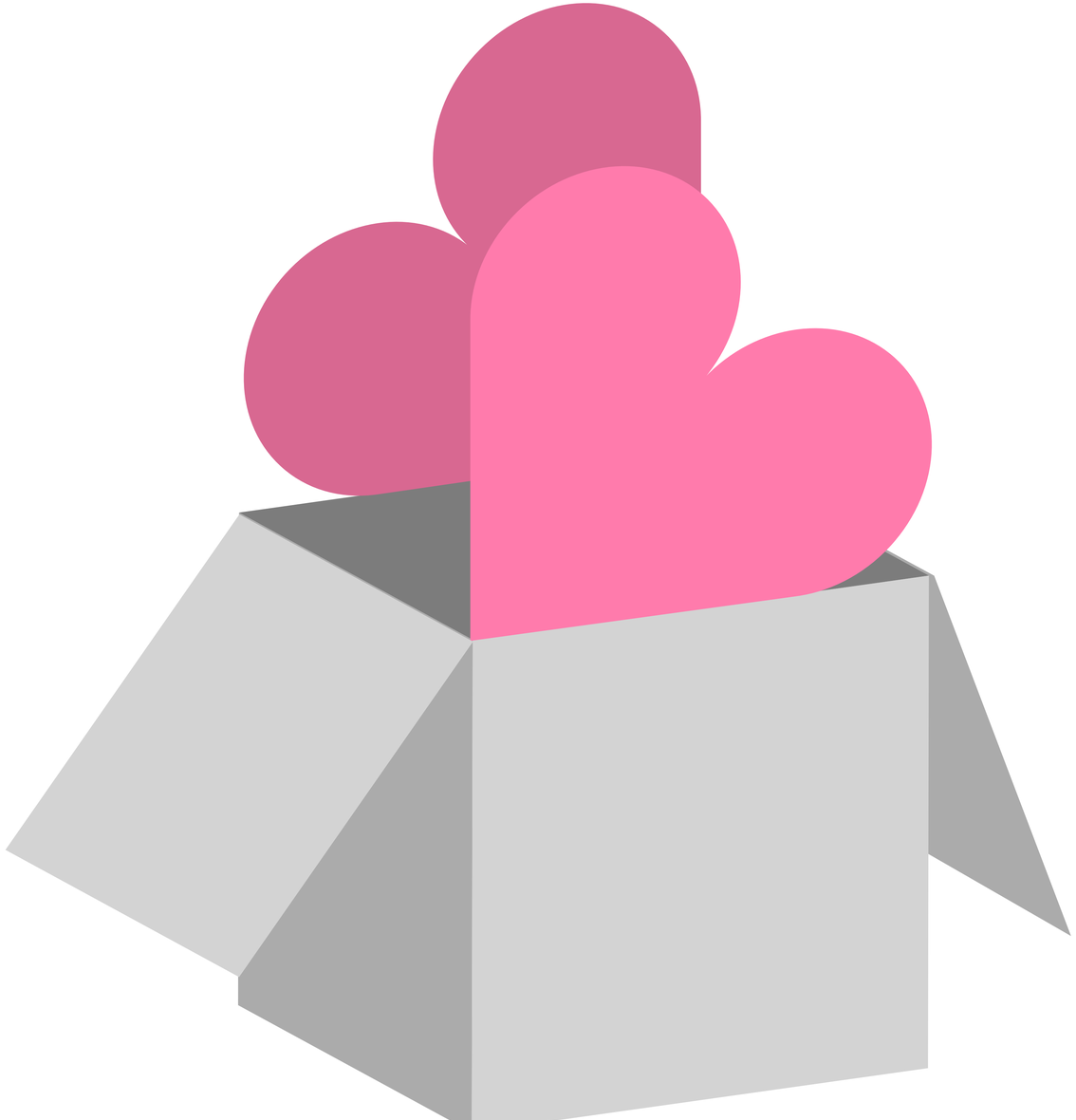

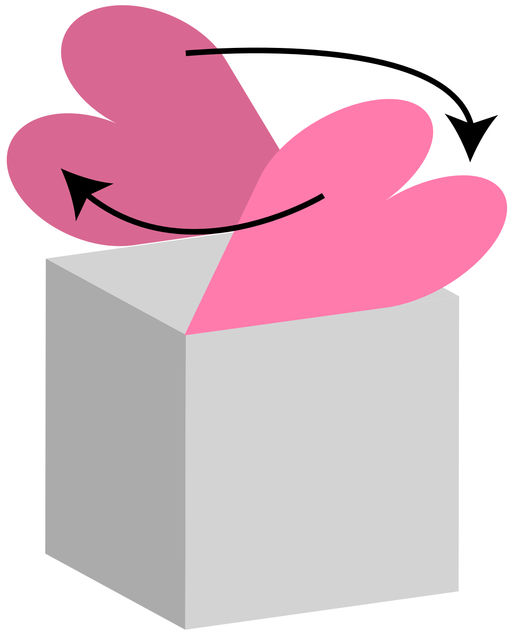

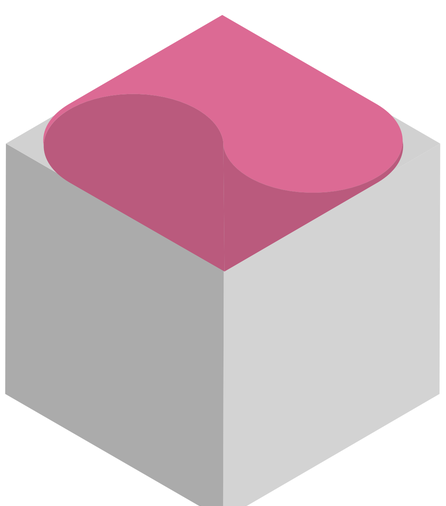

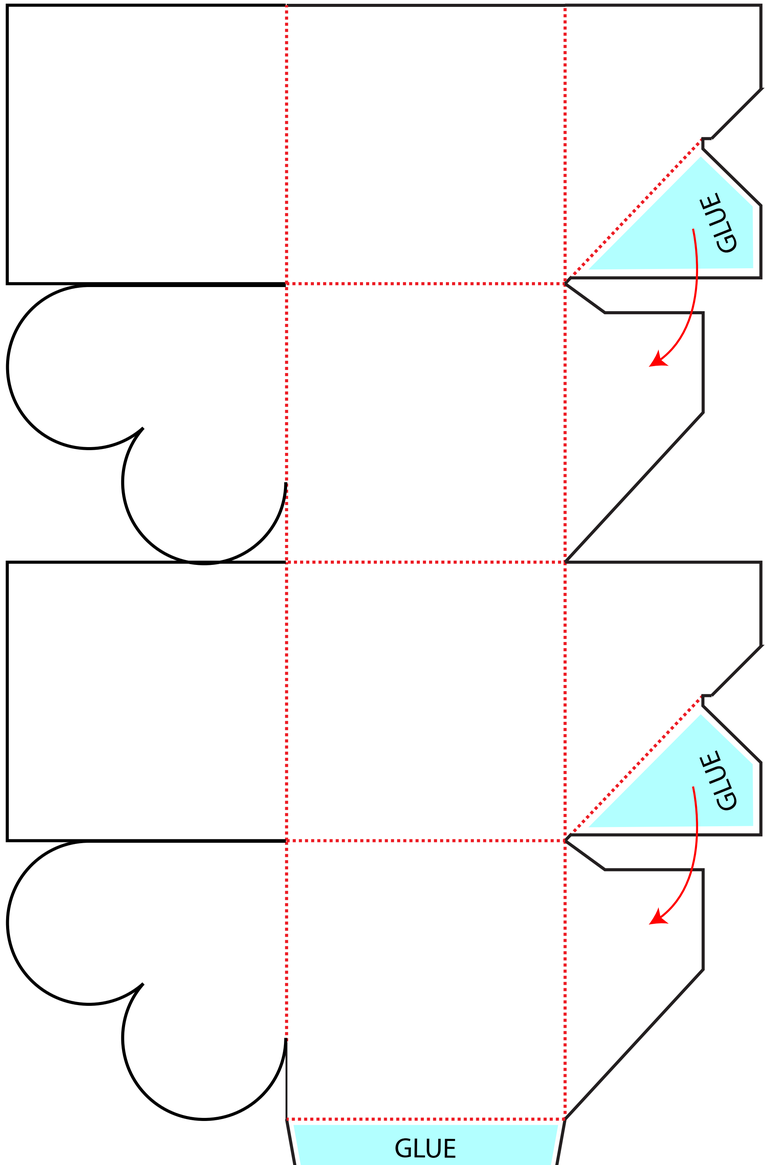
GLUE
GLUE
GLUE

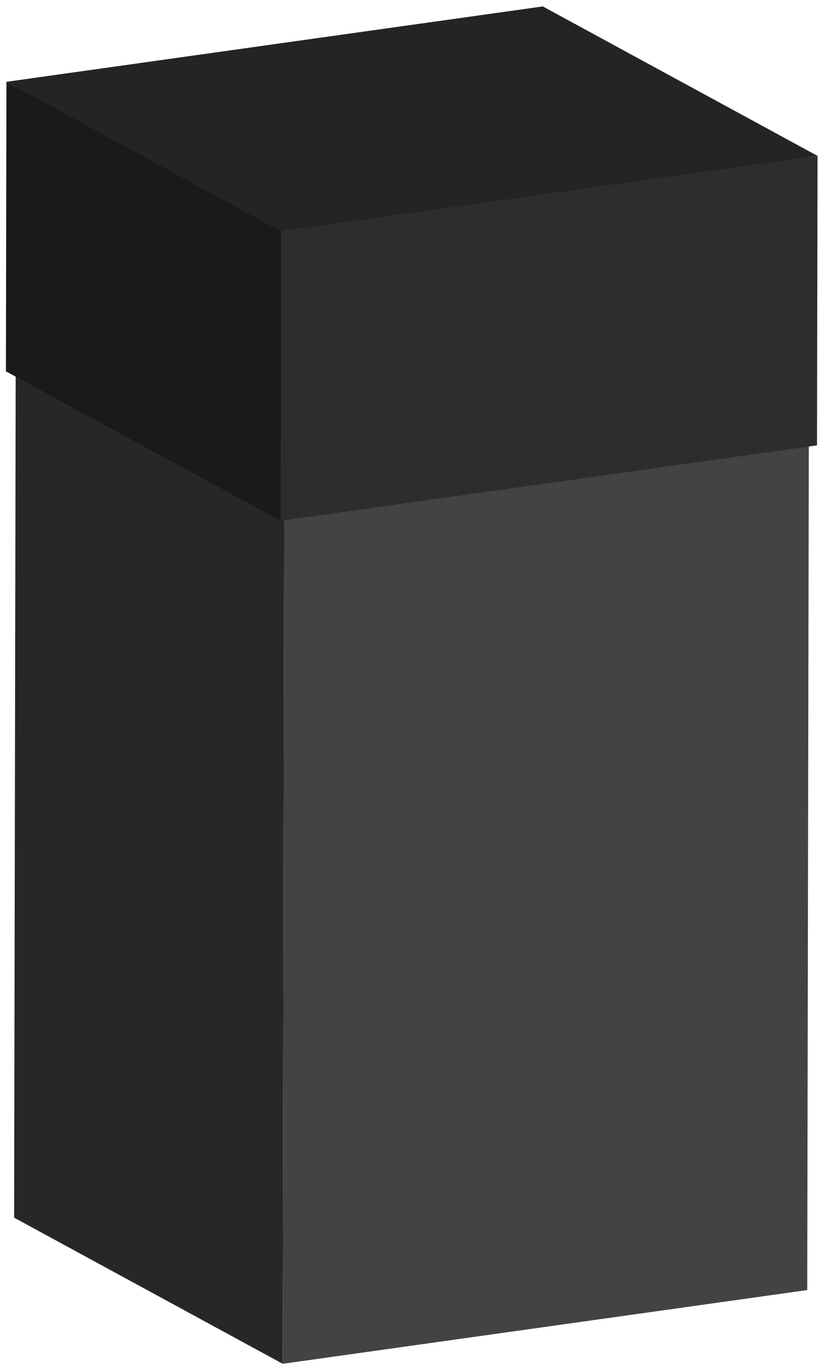

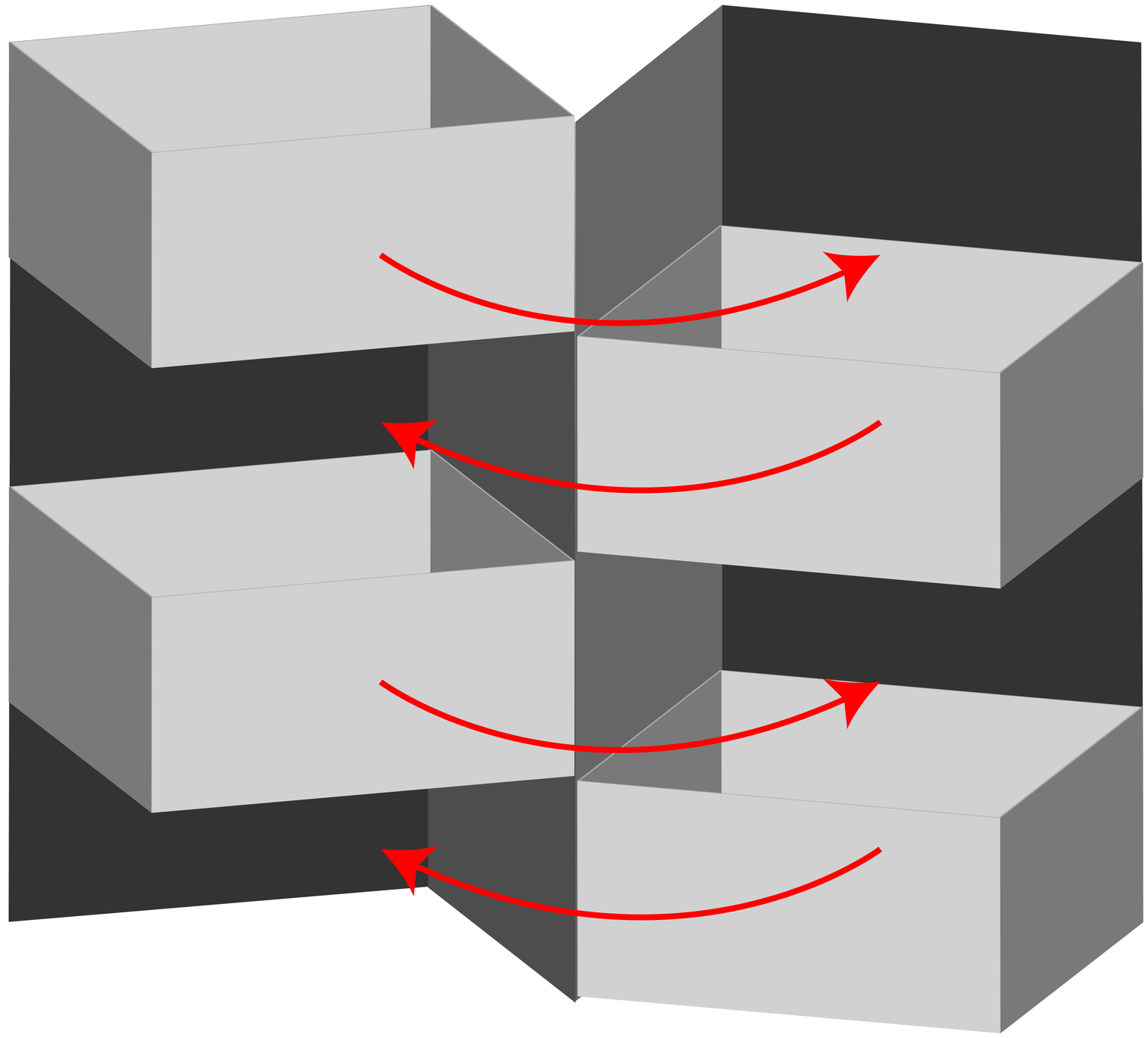

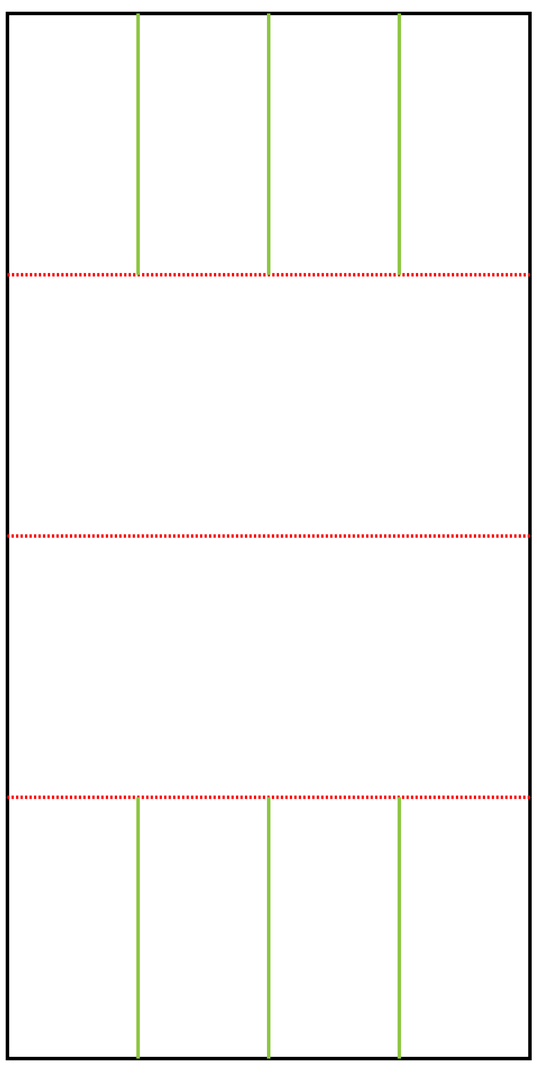

Body

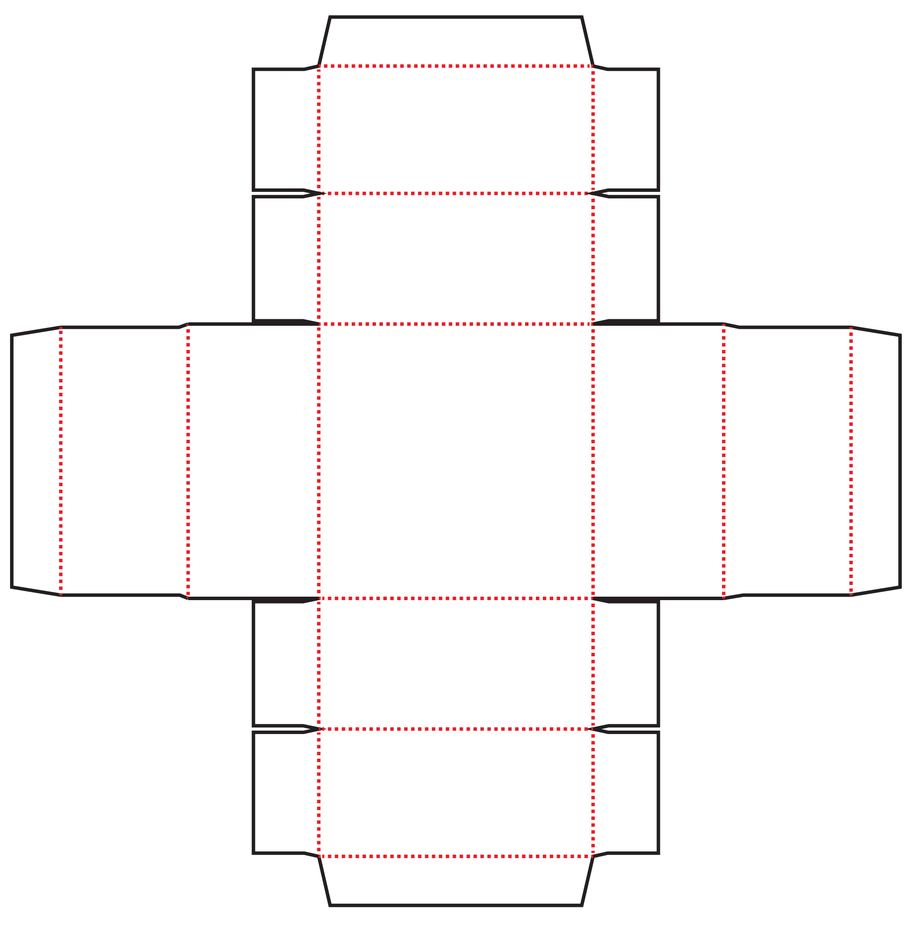

Lid

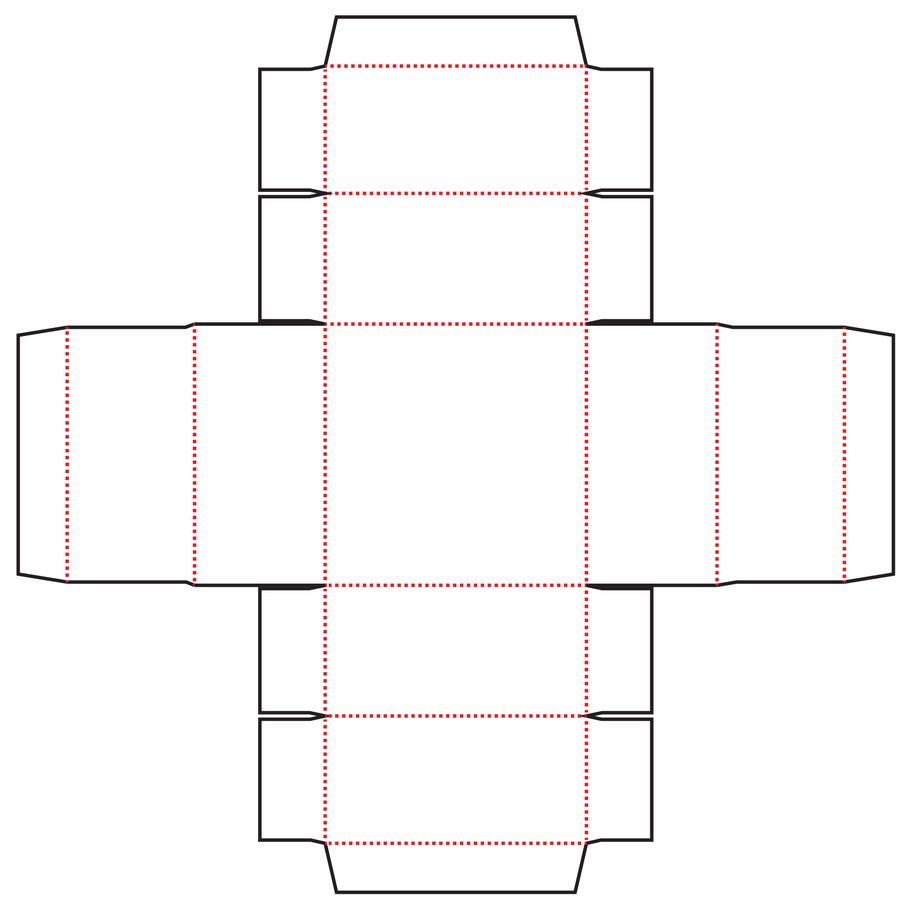

Tray x4 piece

Hard Paper 300-350 gsm

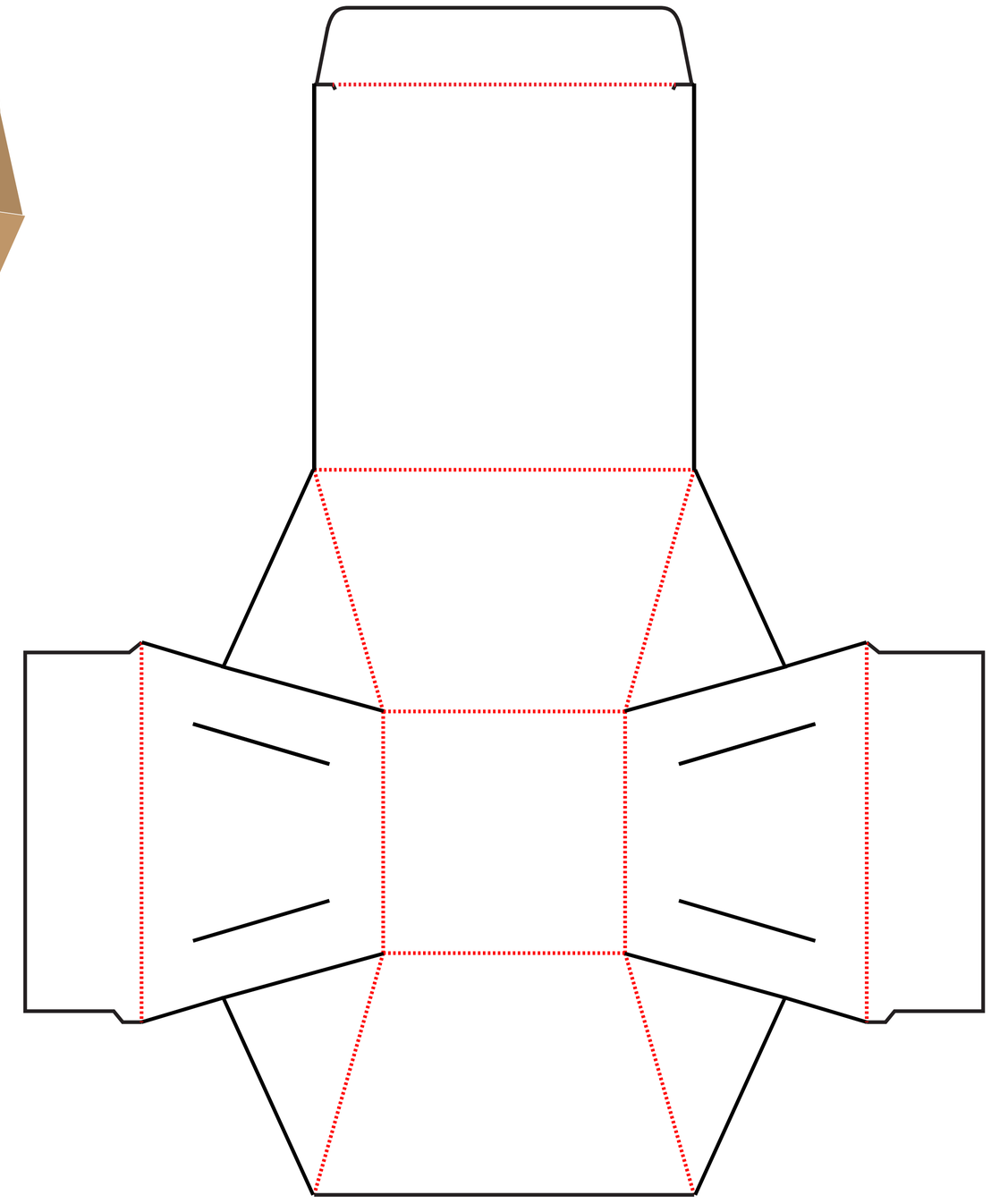

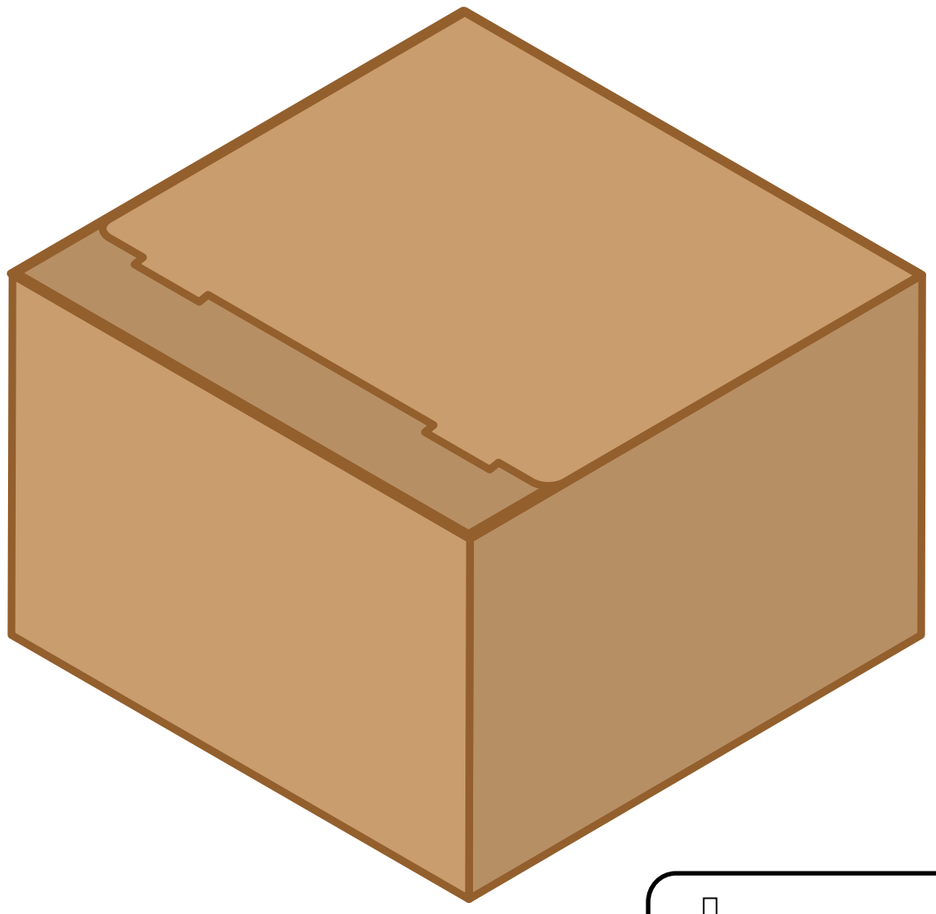

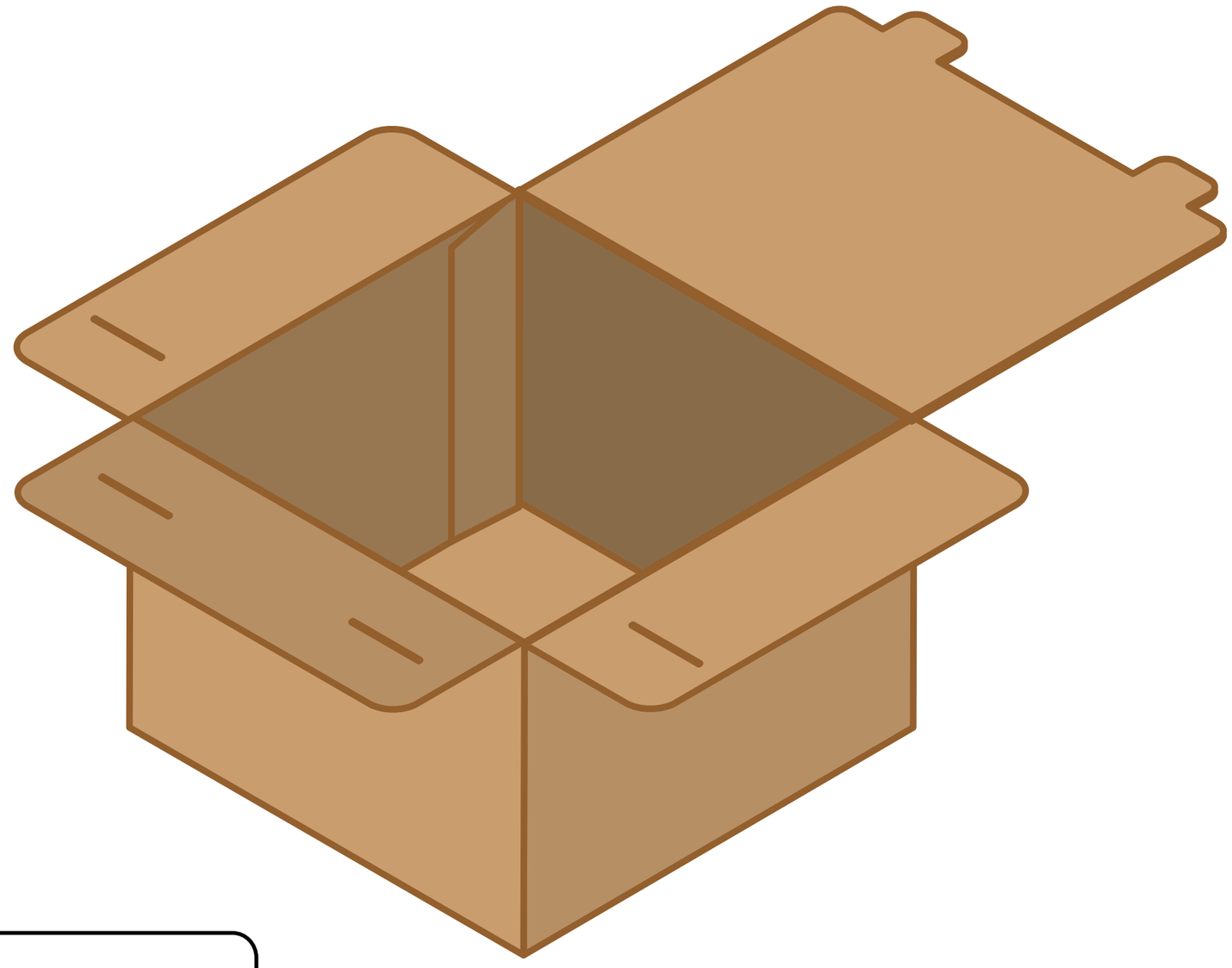

Corrugated Paper : E Flute

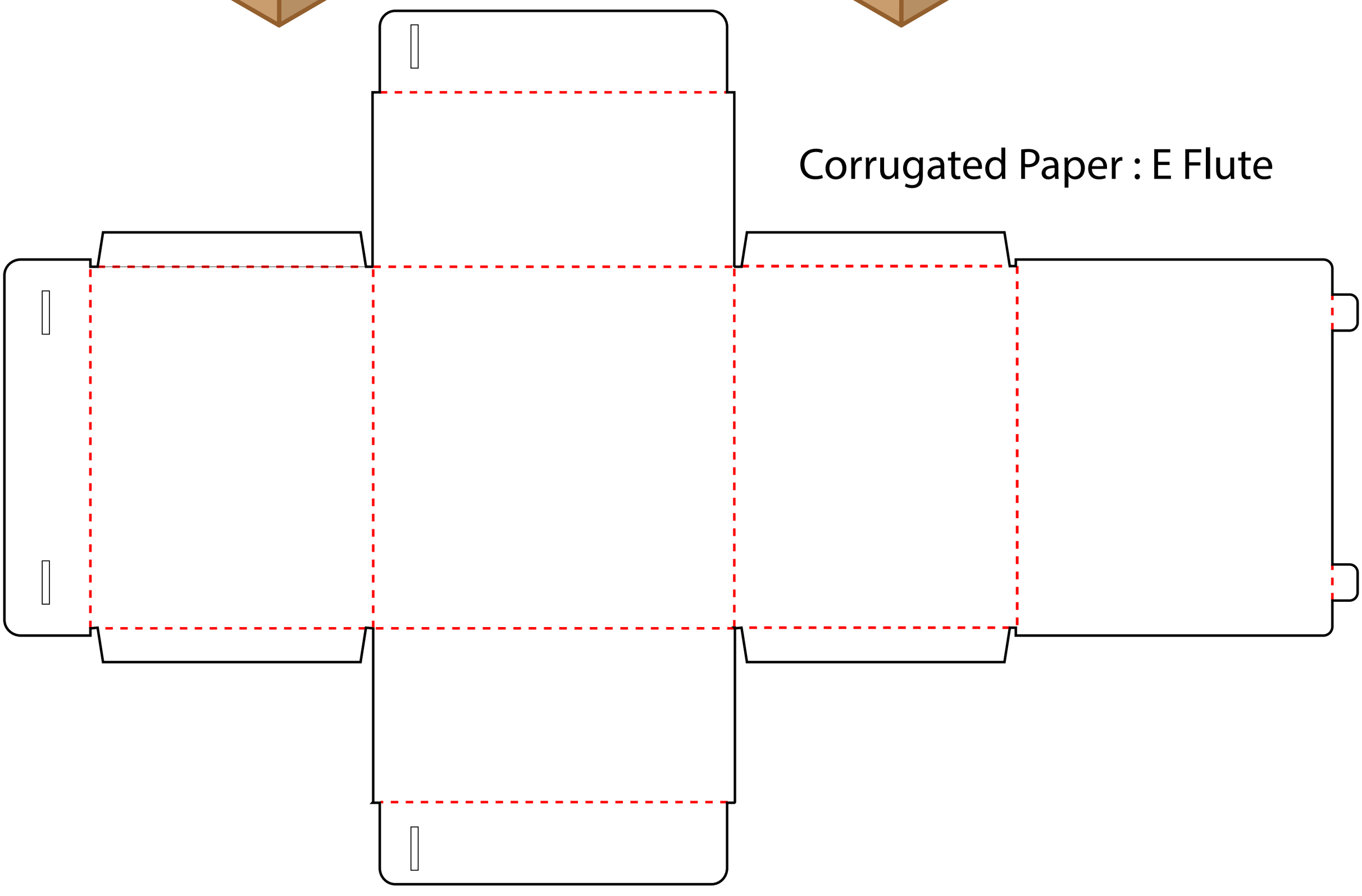

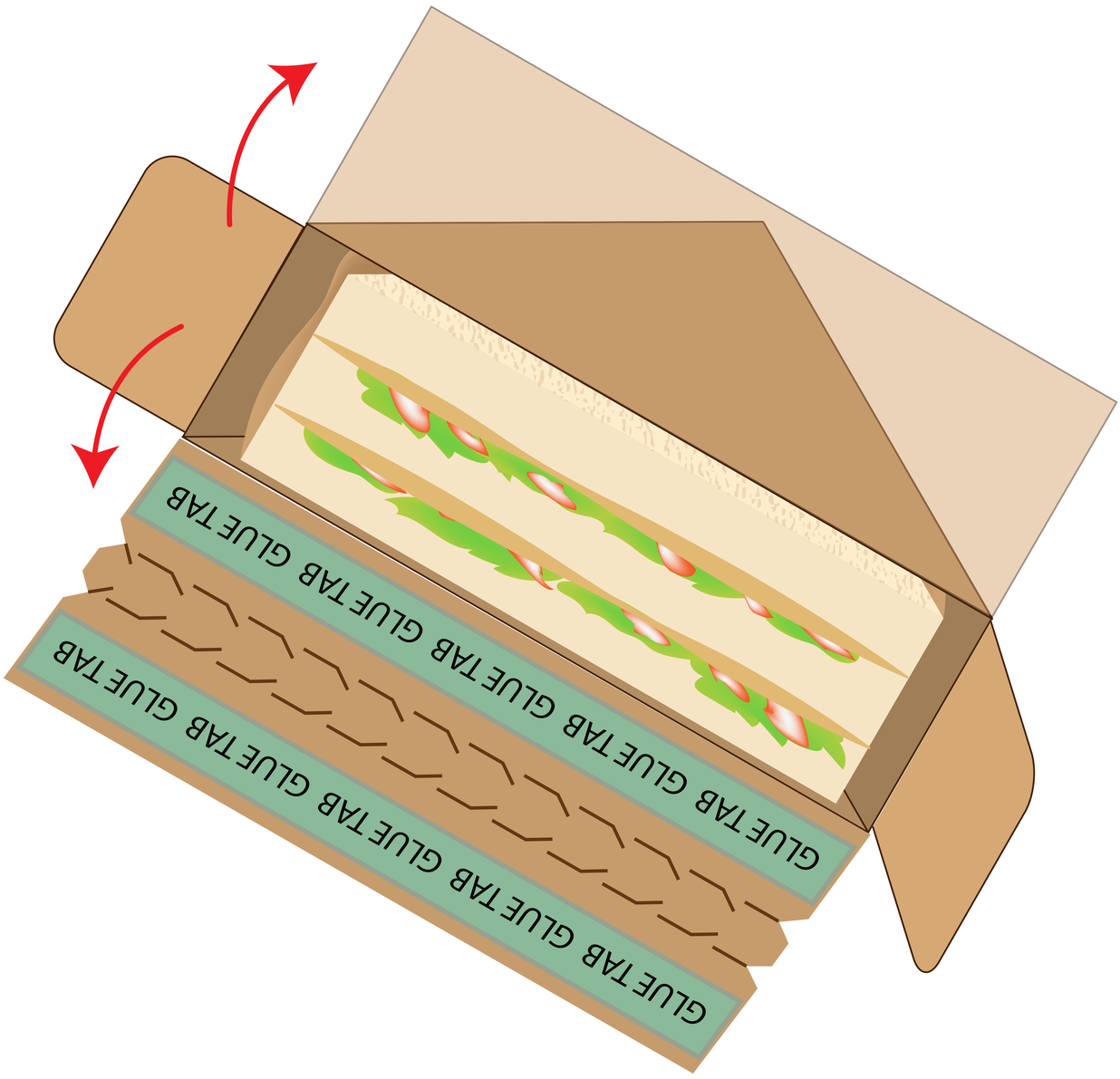
GLUE TAB GLUE TAB GLUE TAB GLUE TAB GLUE TAB
GLUE TAB GLUE TAB GLUE TAB GLUE TAB GLUE TAB

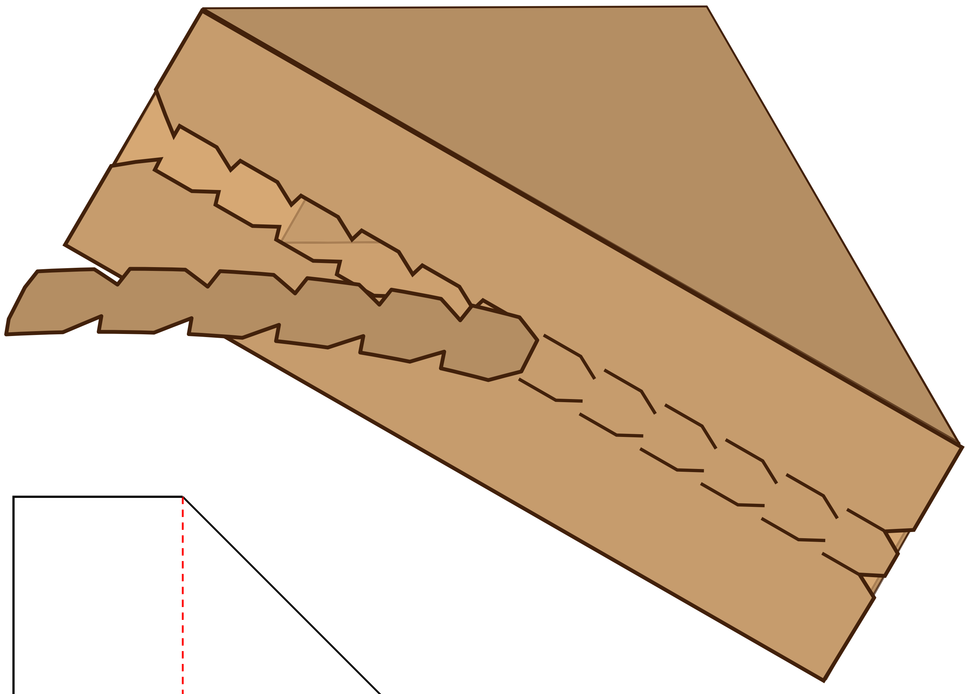

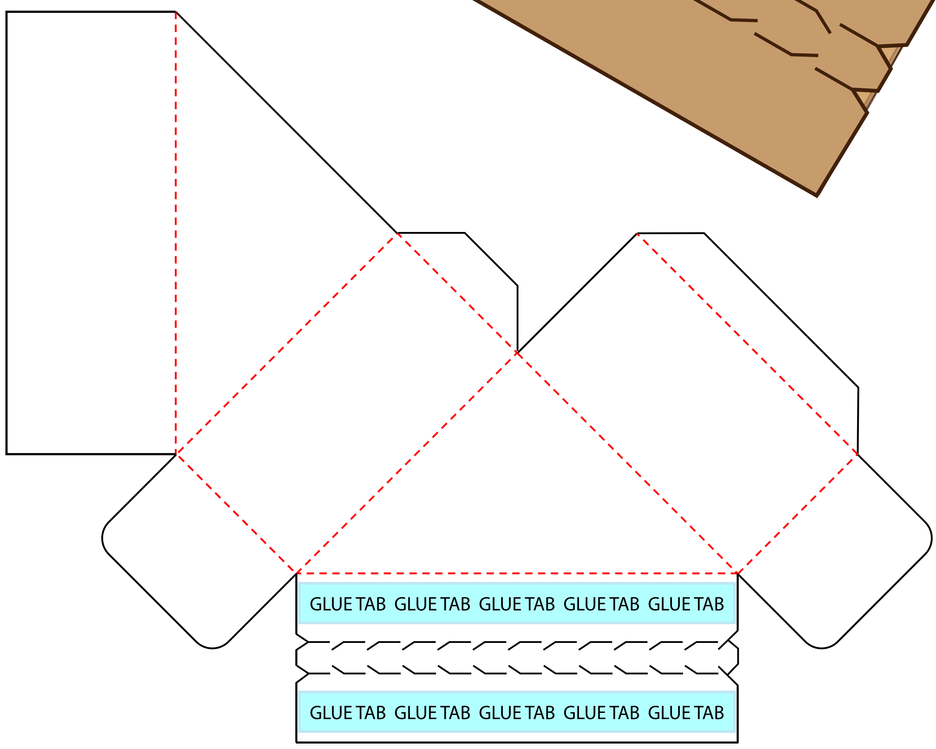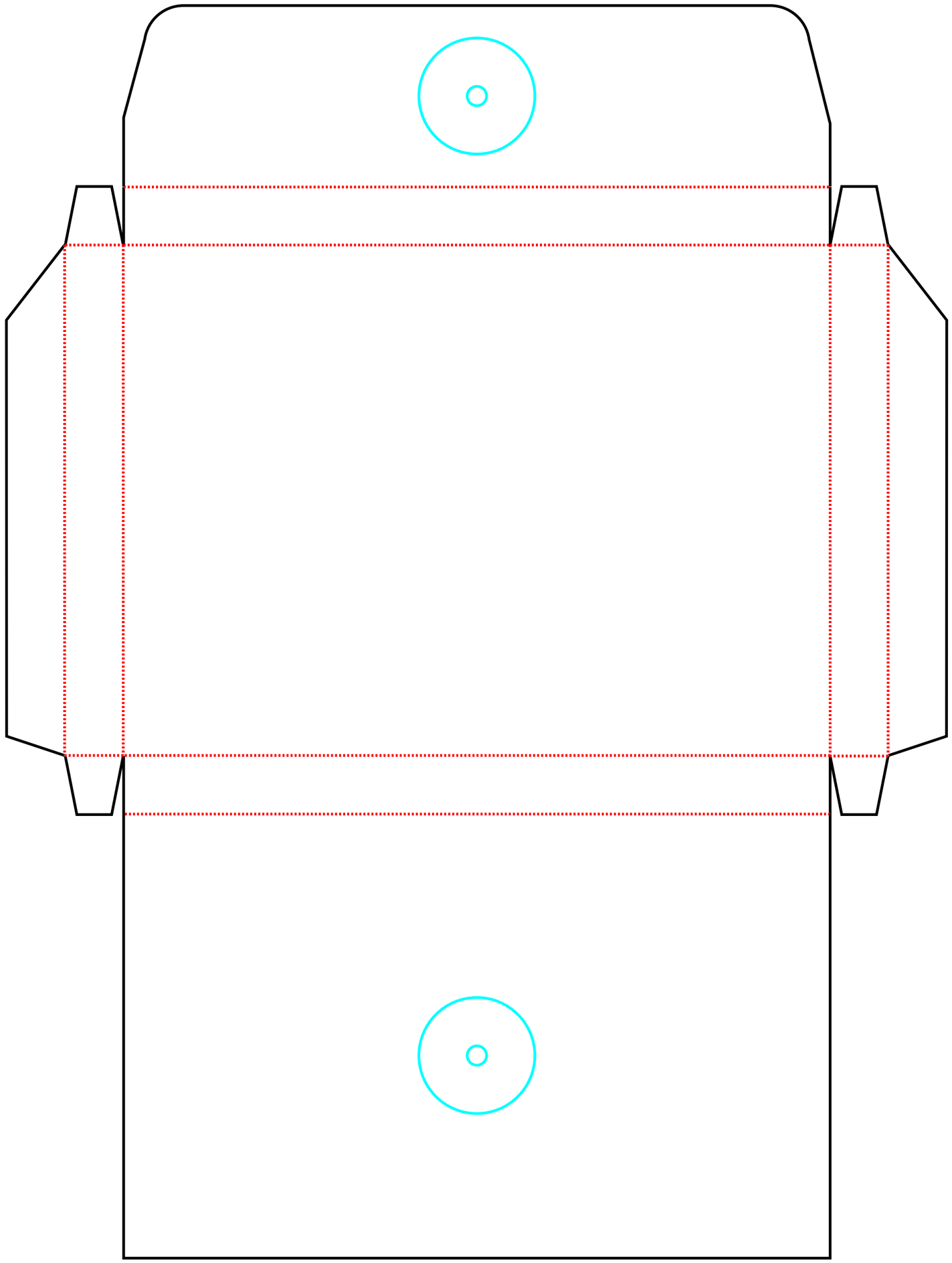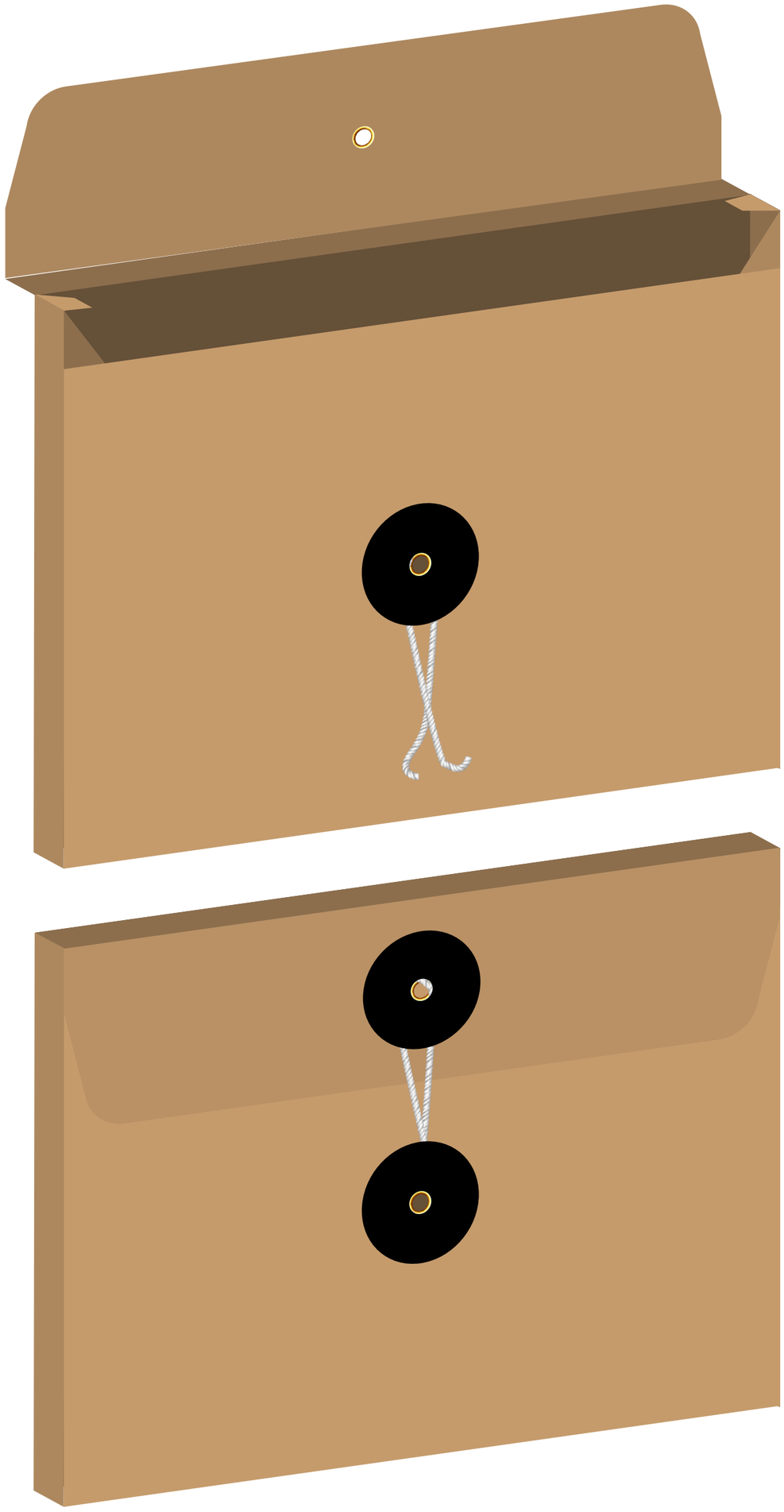
GLUE TAB GLUE TAB GLUE TAB GLUE TAB GLUE TAB
GLUE TAB GLUE TAB GLUE TAB GLUE TAB GLUE TAB