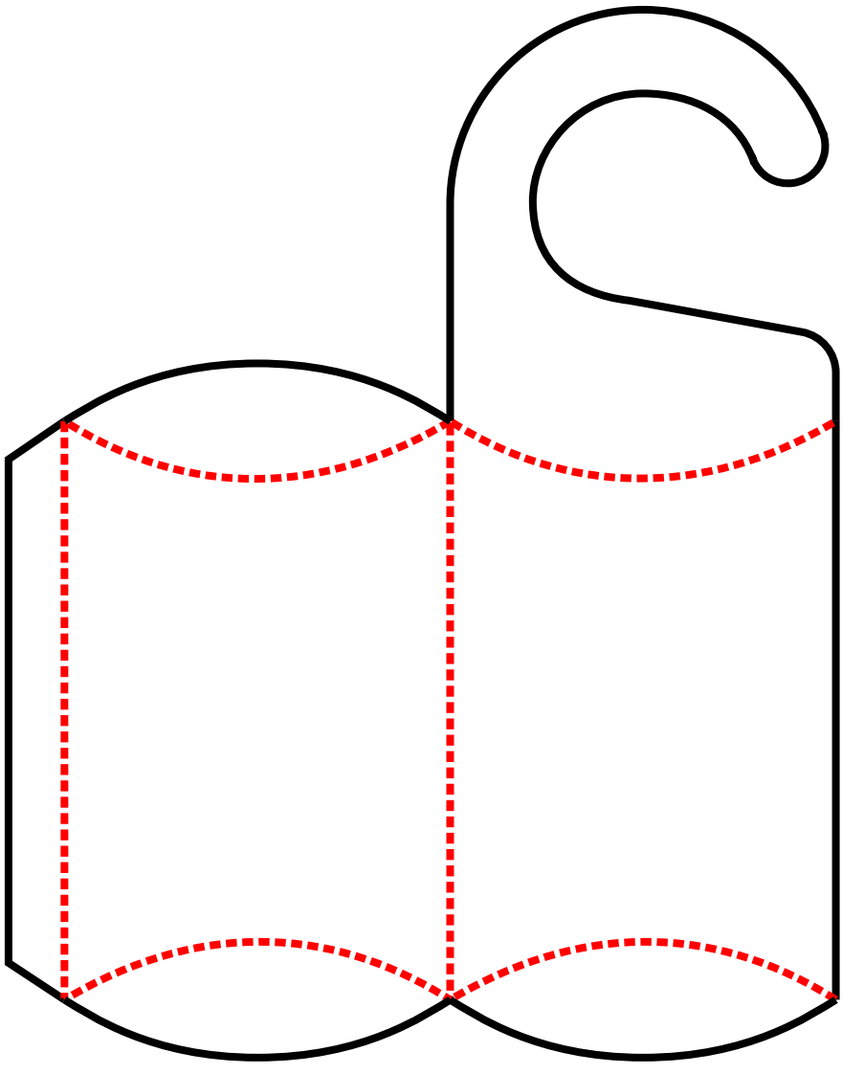

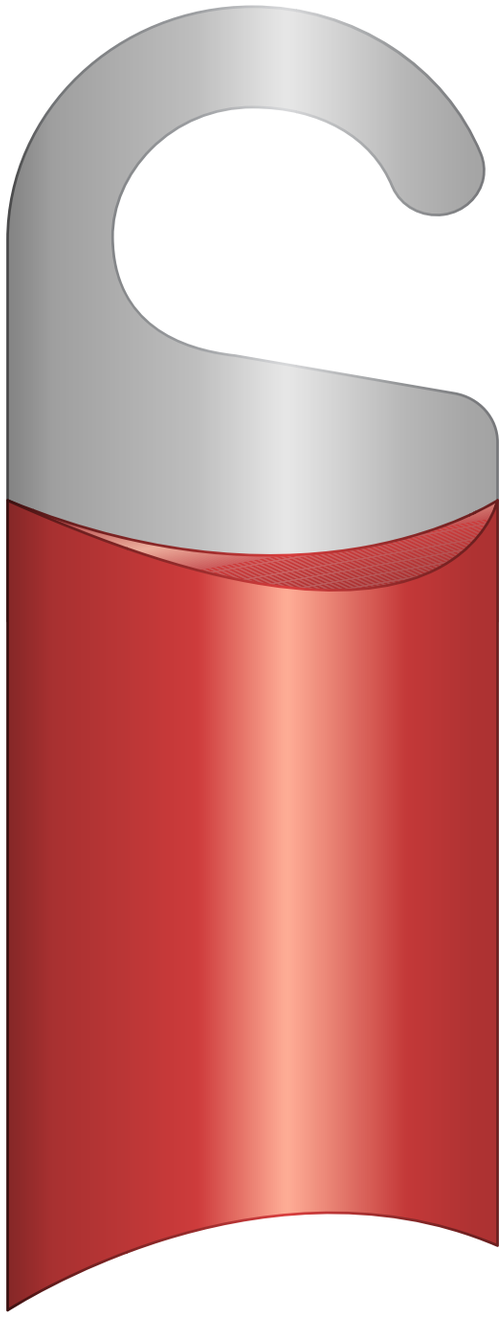

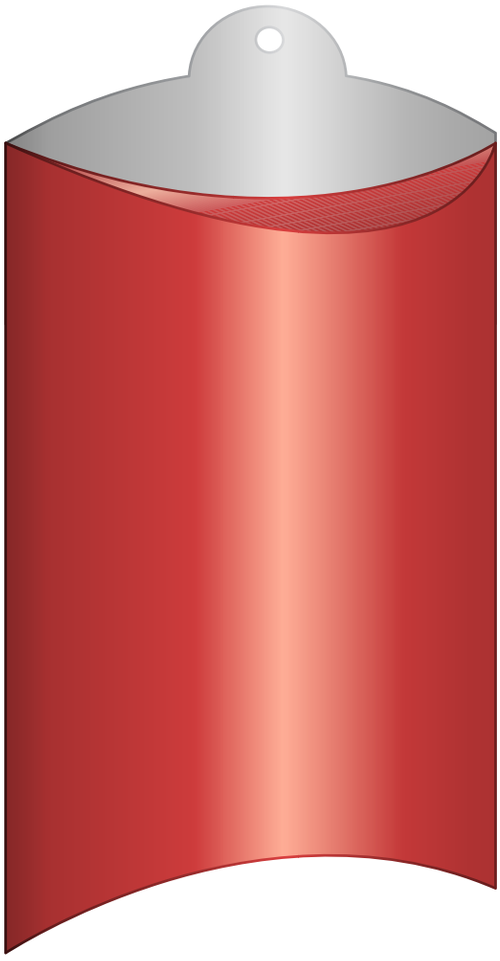

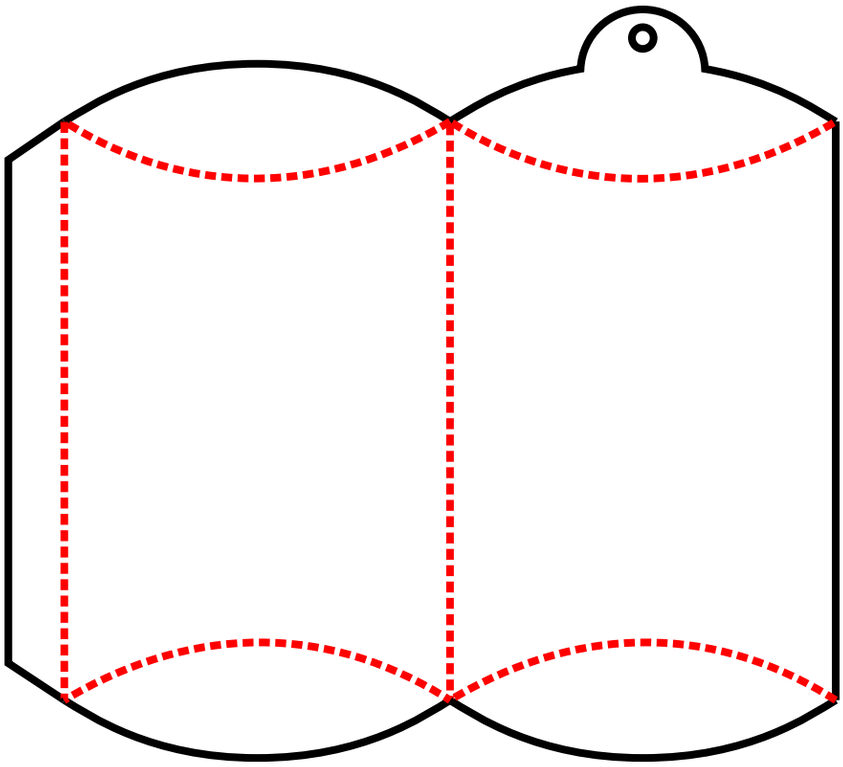

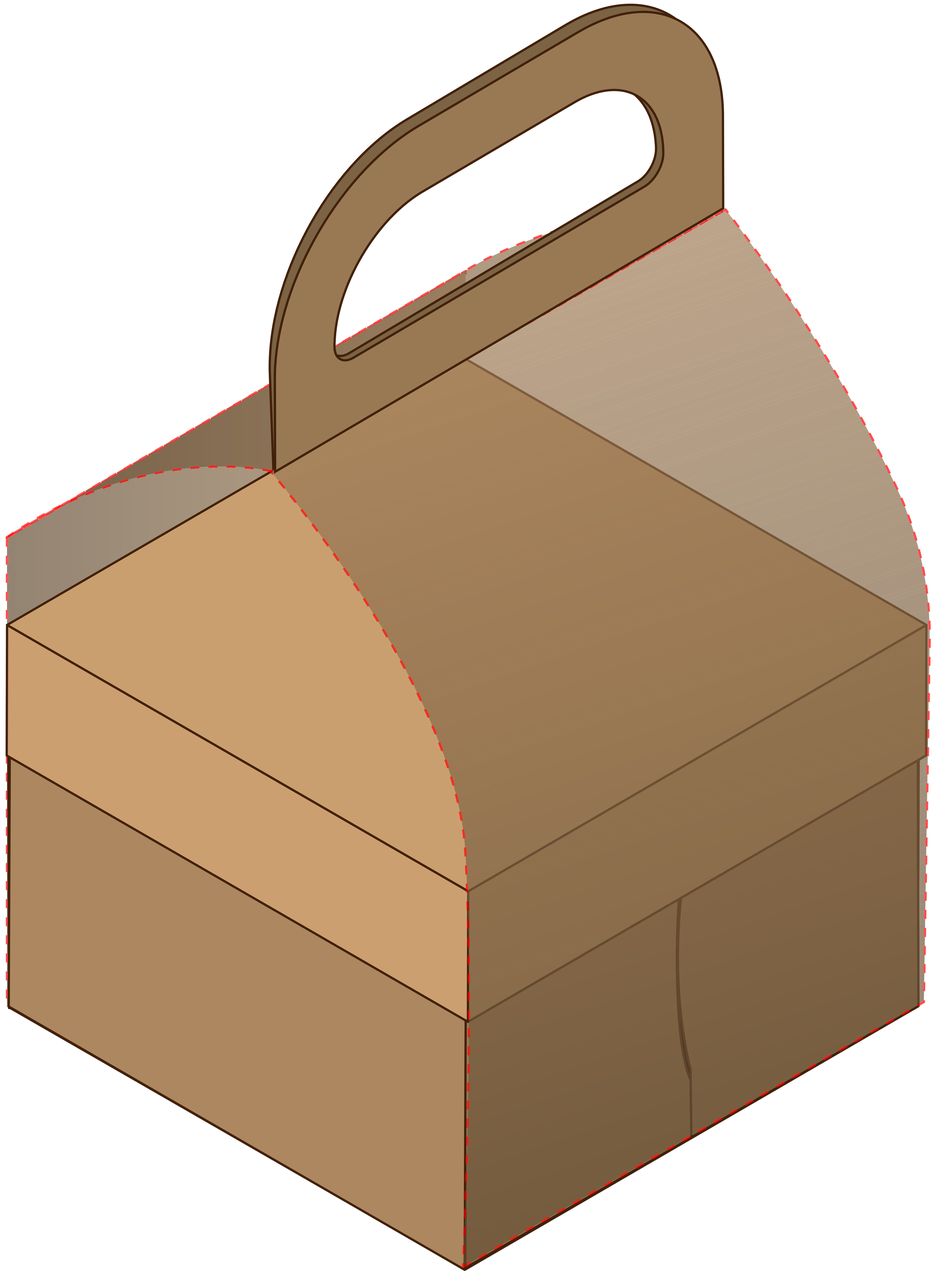

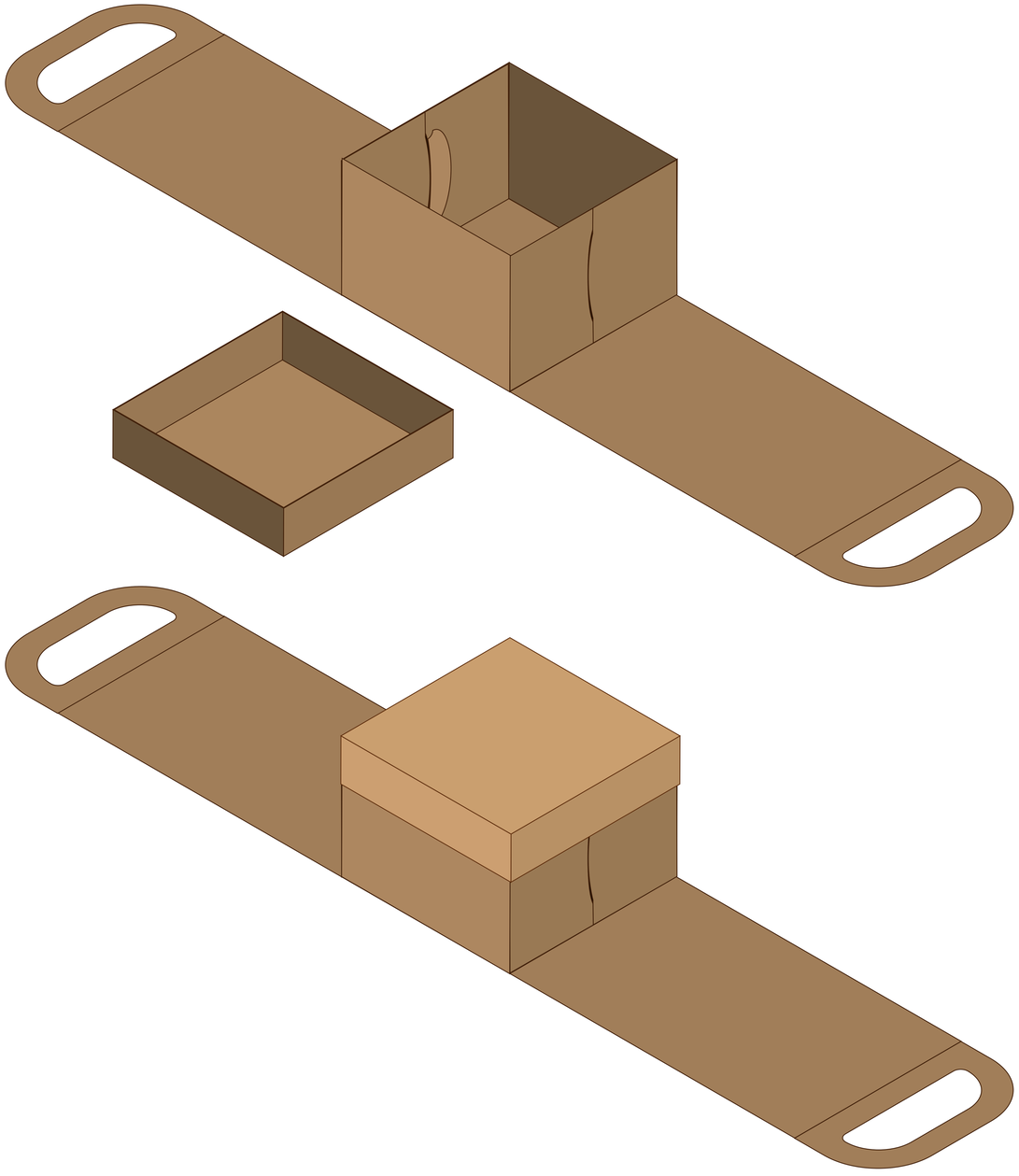

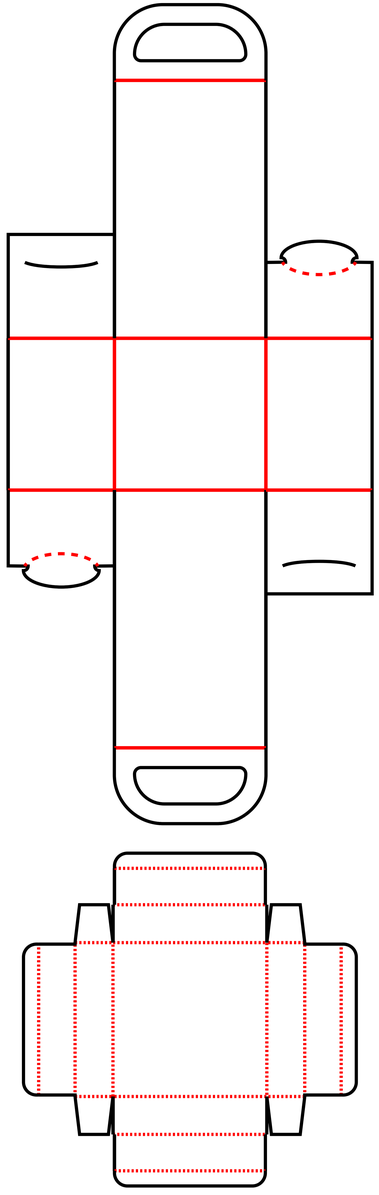

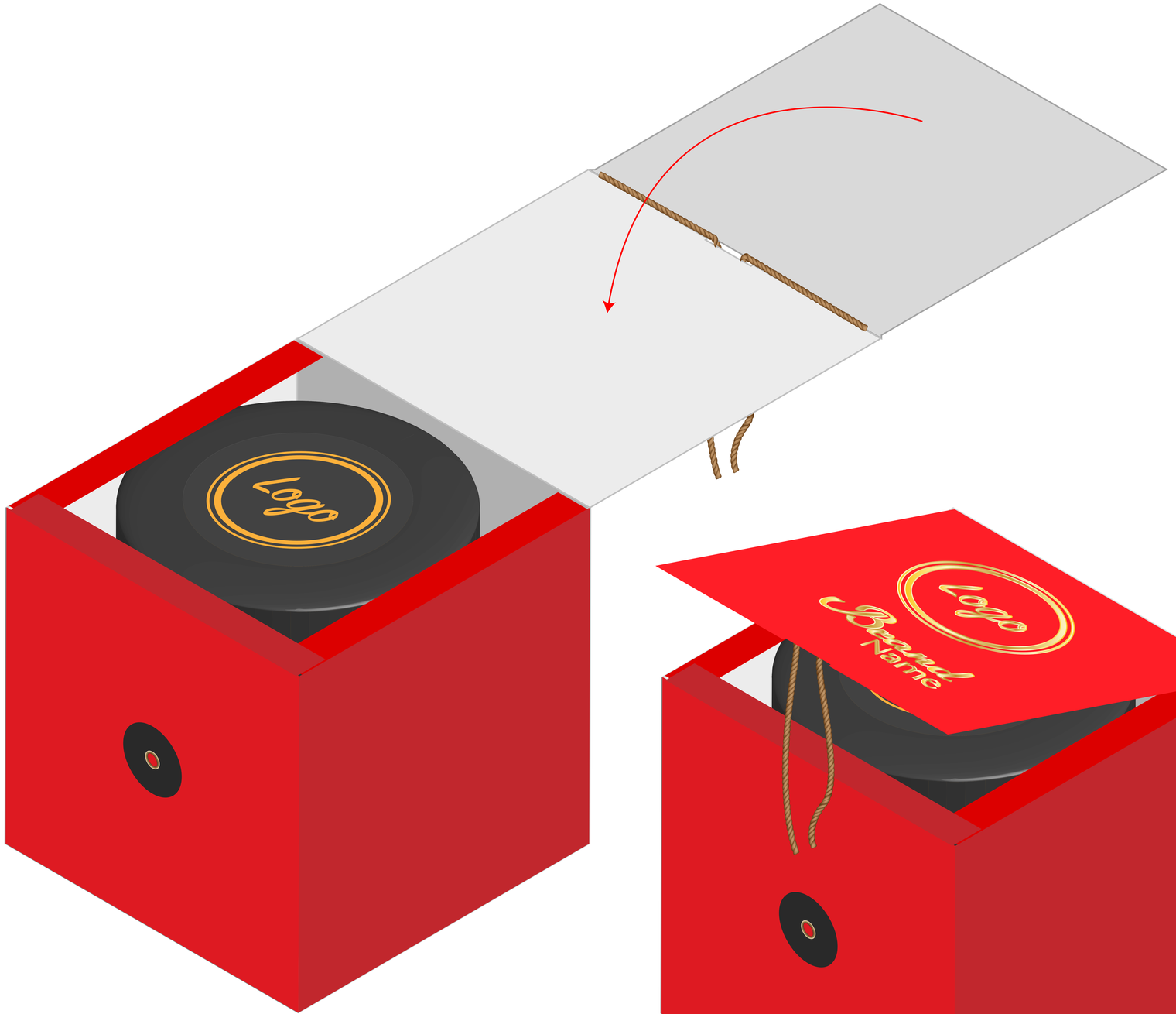
Logo

Logo
Brand
Name

Logo
Brand
Name

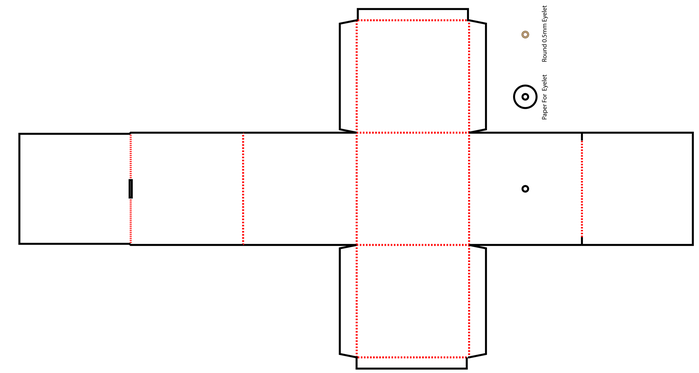
Paper For Eyelet
Round 6.5mm Eyelet

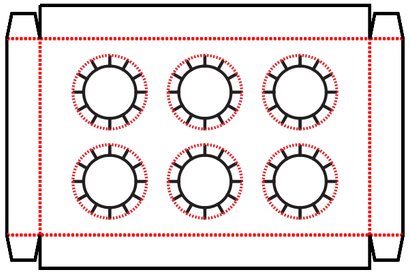

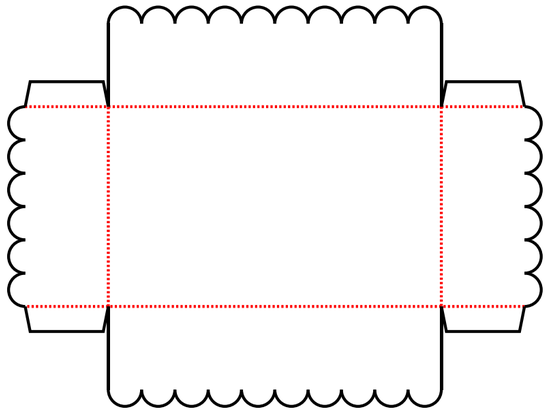

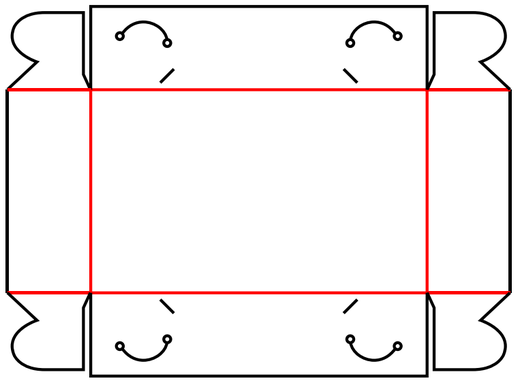

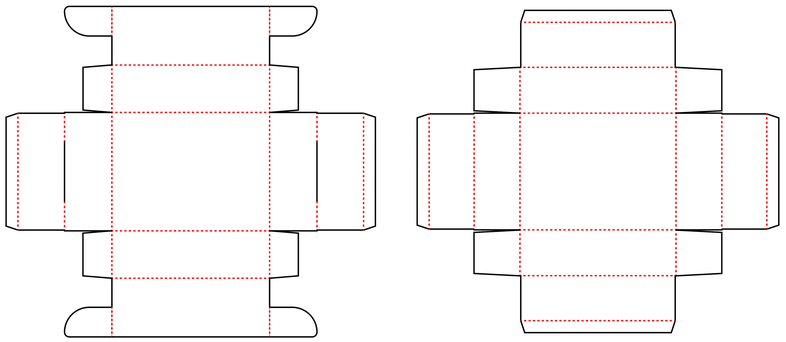

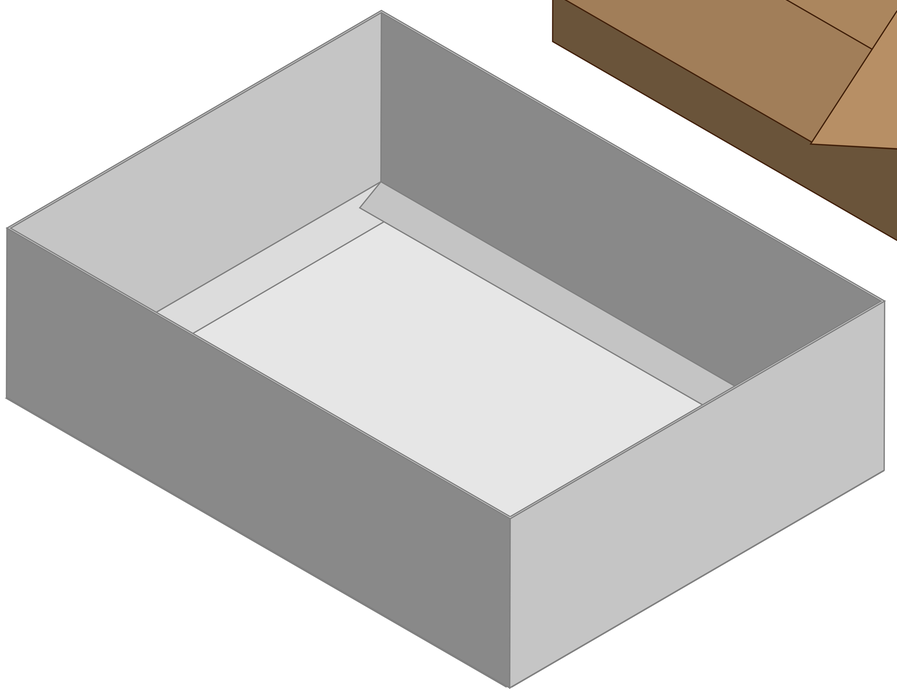

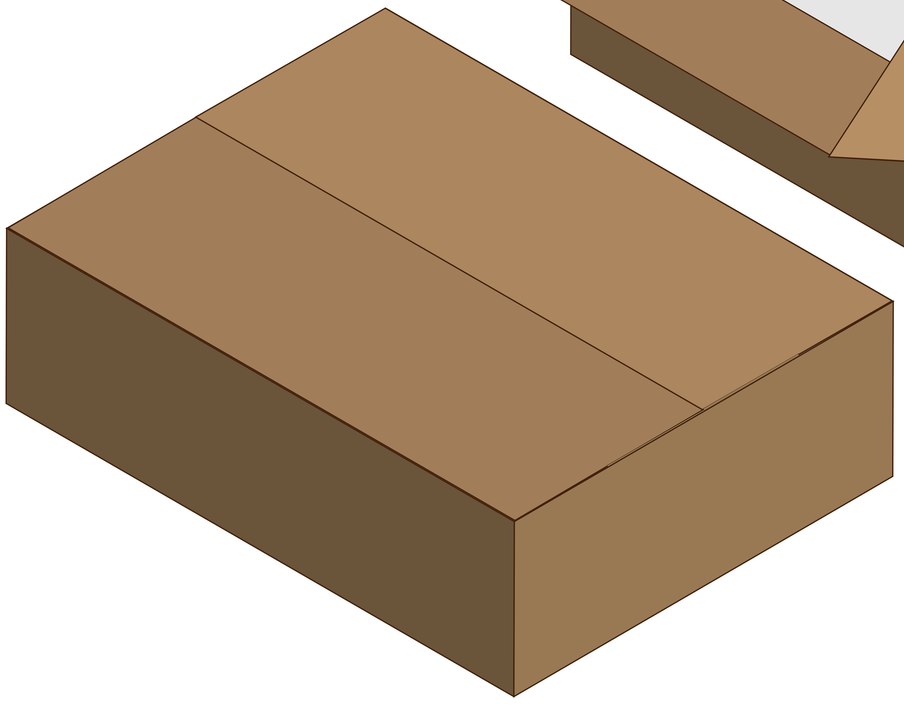

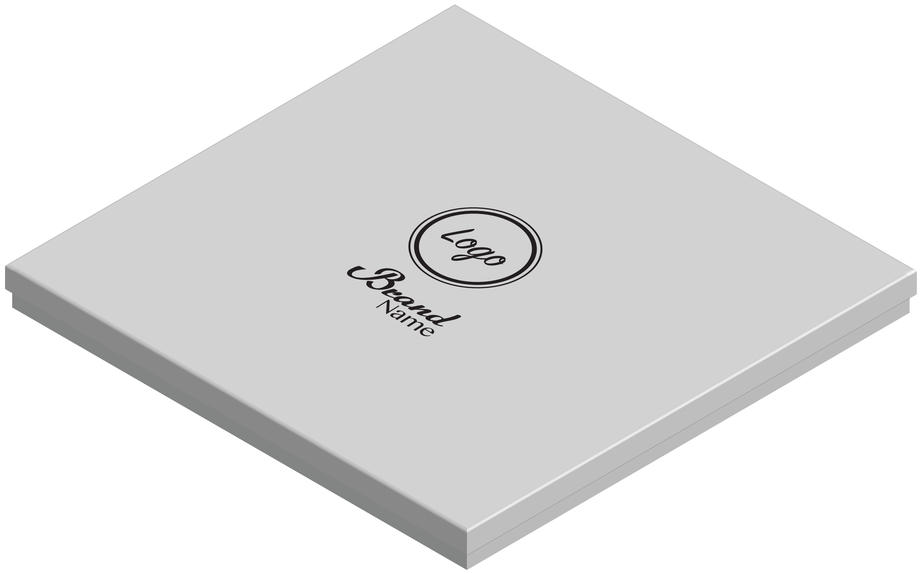

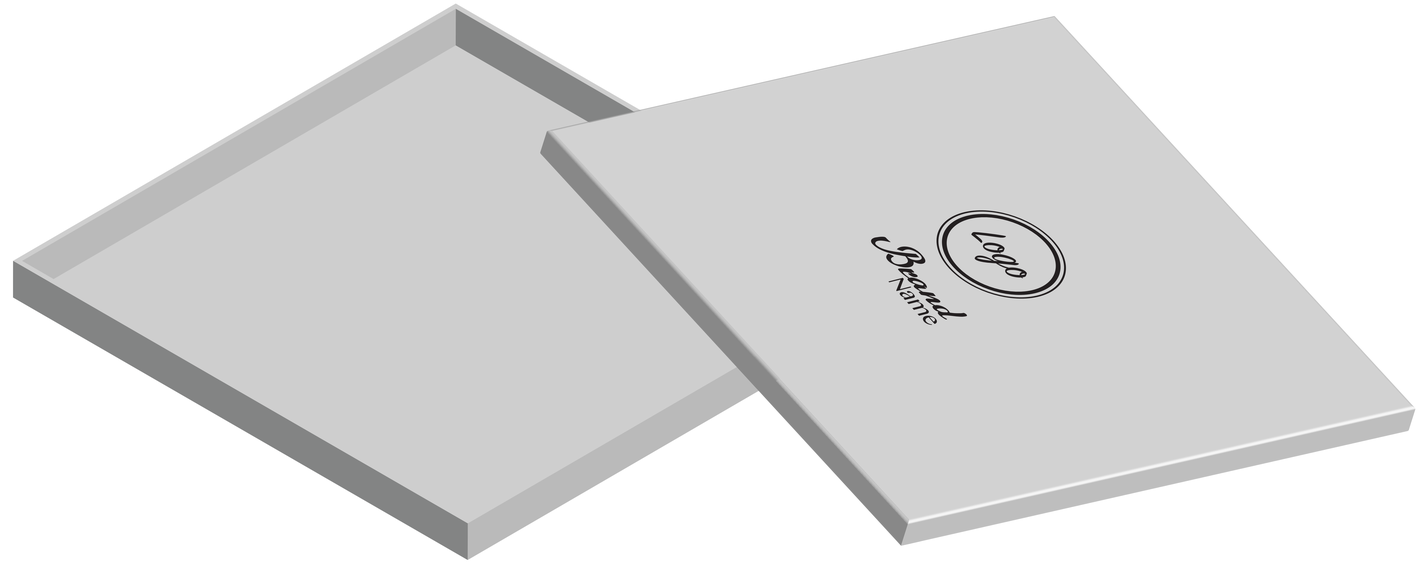

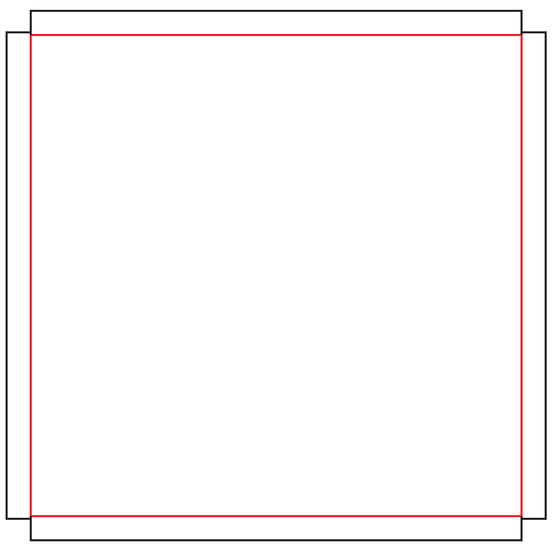

Hard Board Paper
Thick 0.138 cm
Top Box

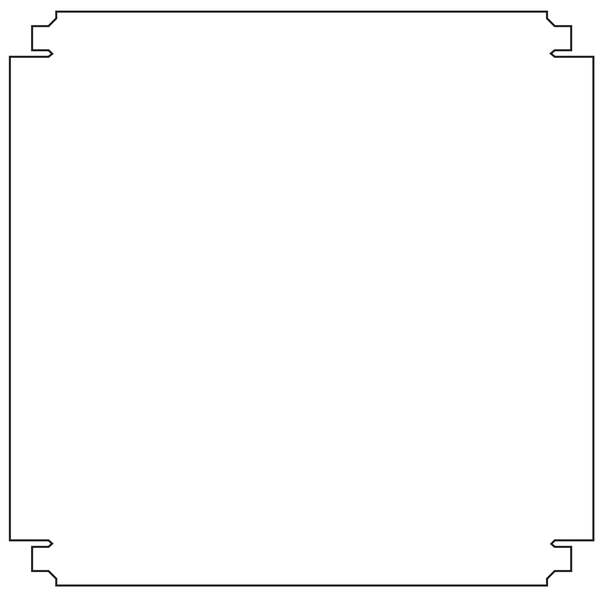

Wrapping Paper
Top Box

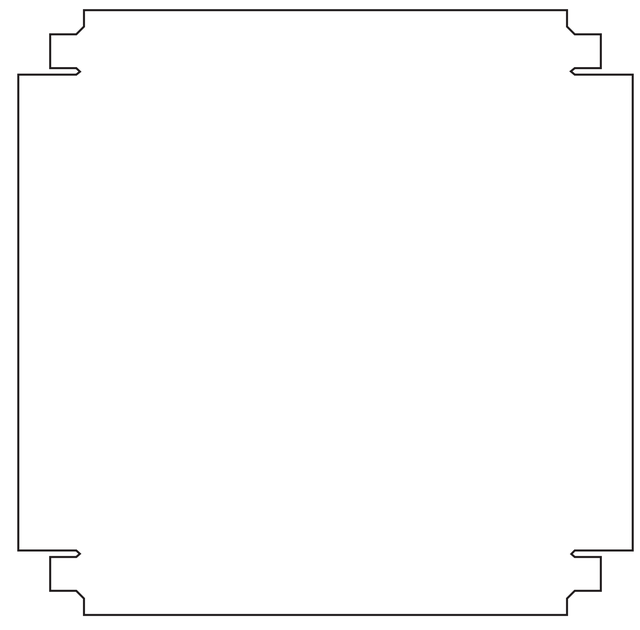

Hard Board Paper
Thick 0.138 cm
Top Box

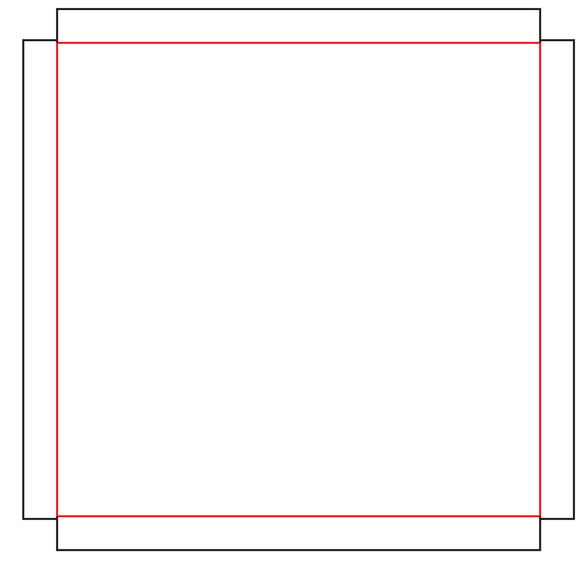

Wrapping Paper
Top Box

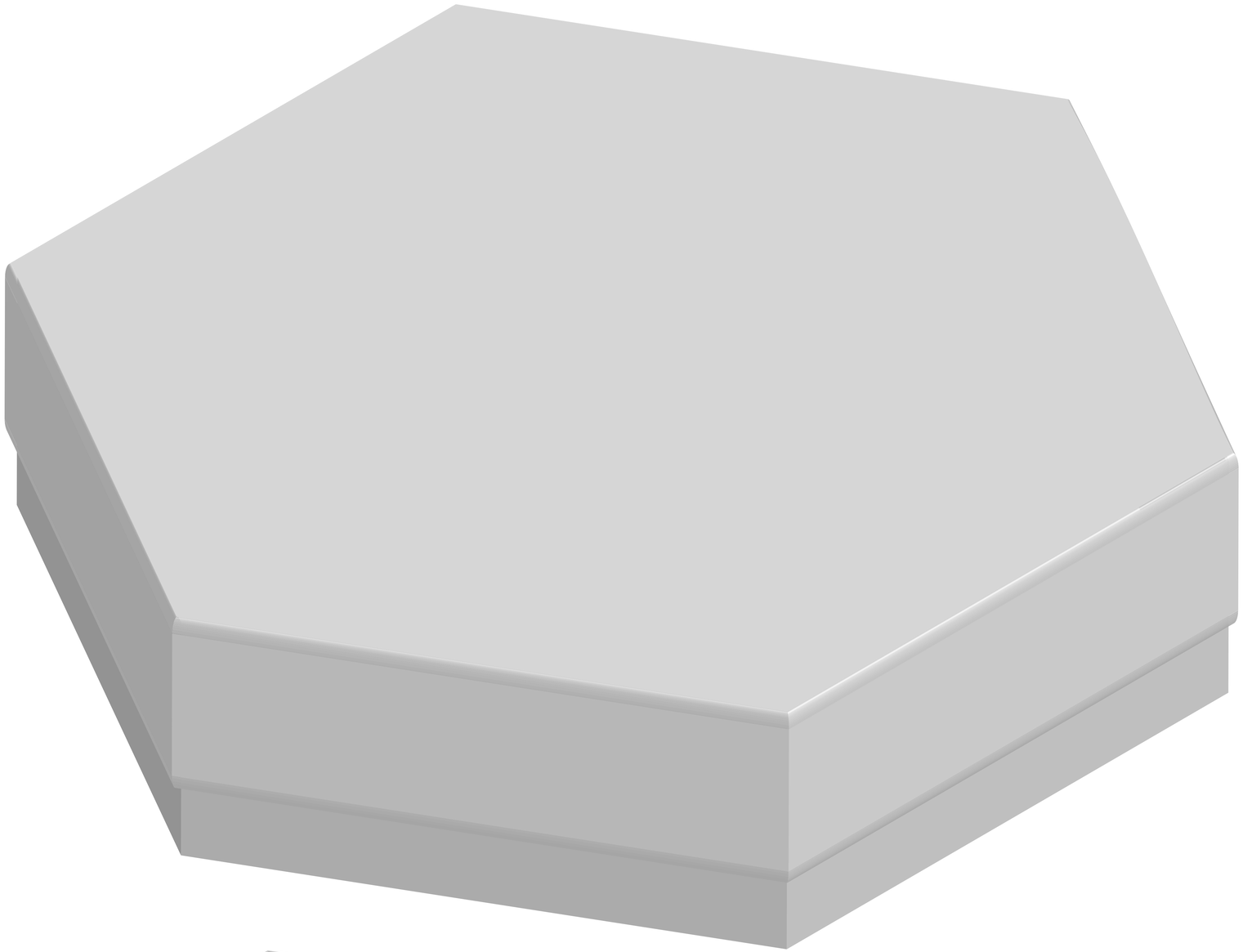

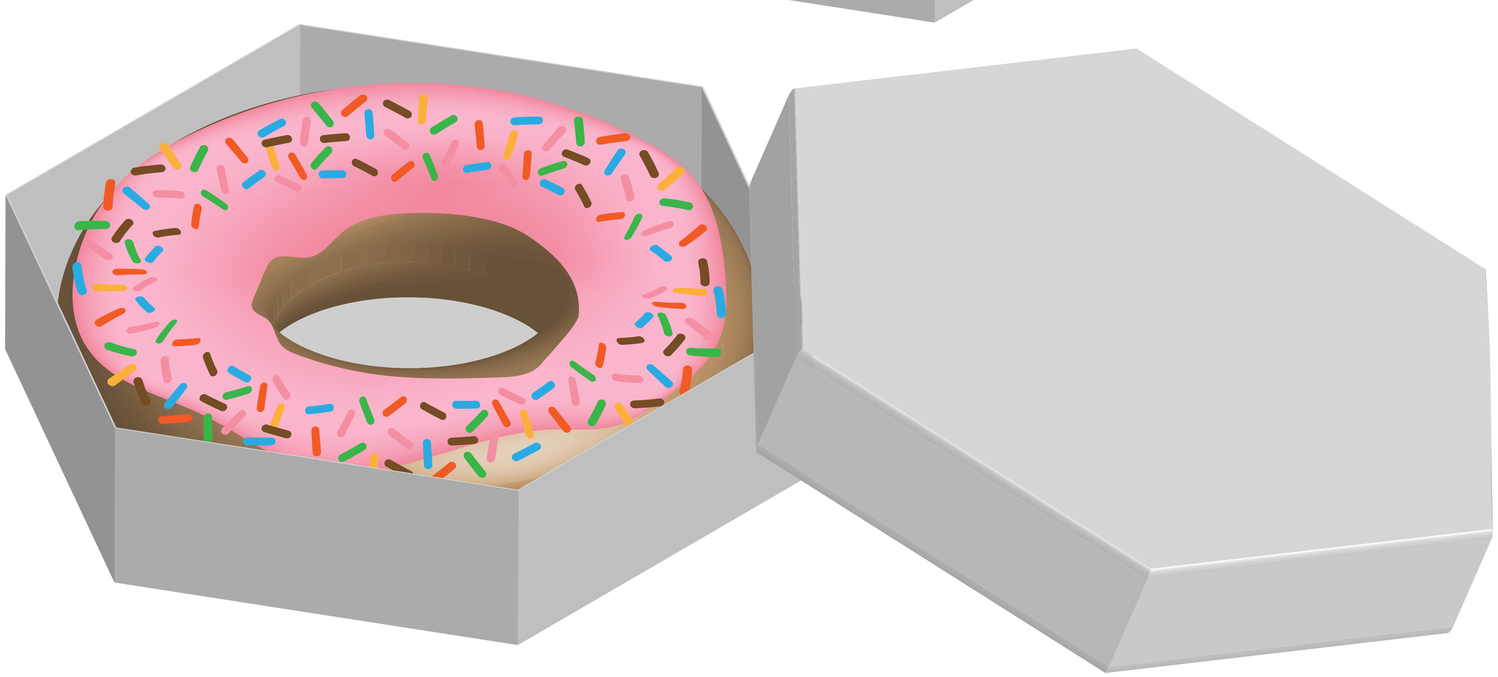

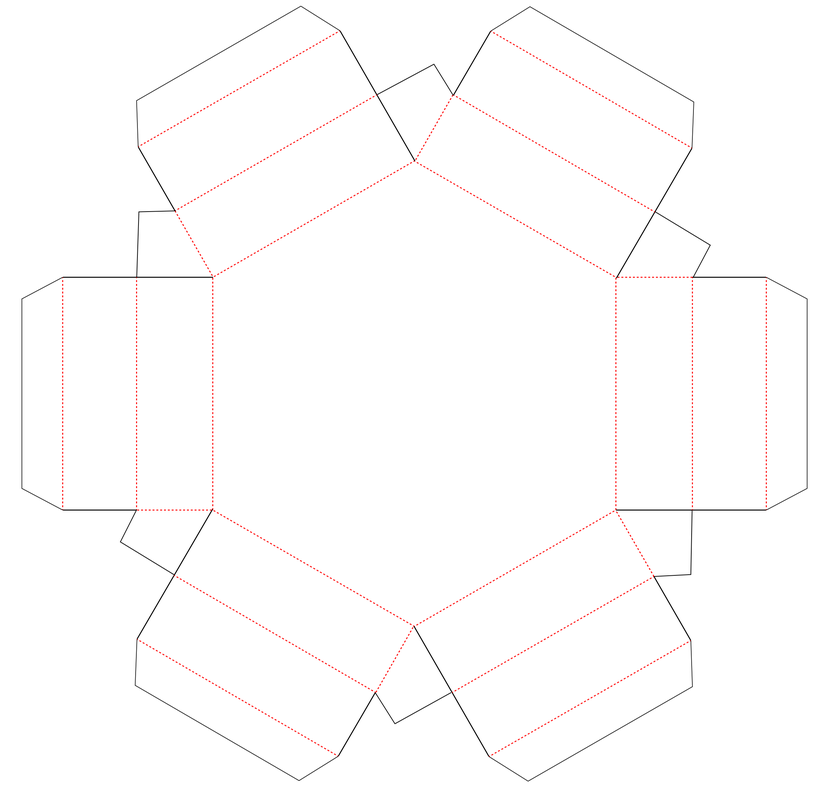

Hard Paper 210-300 gsm
Top Box

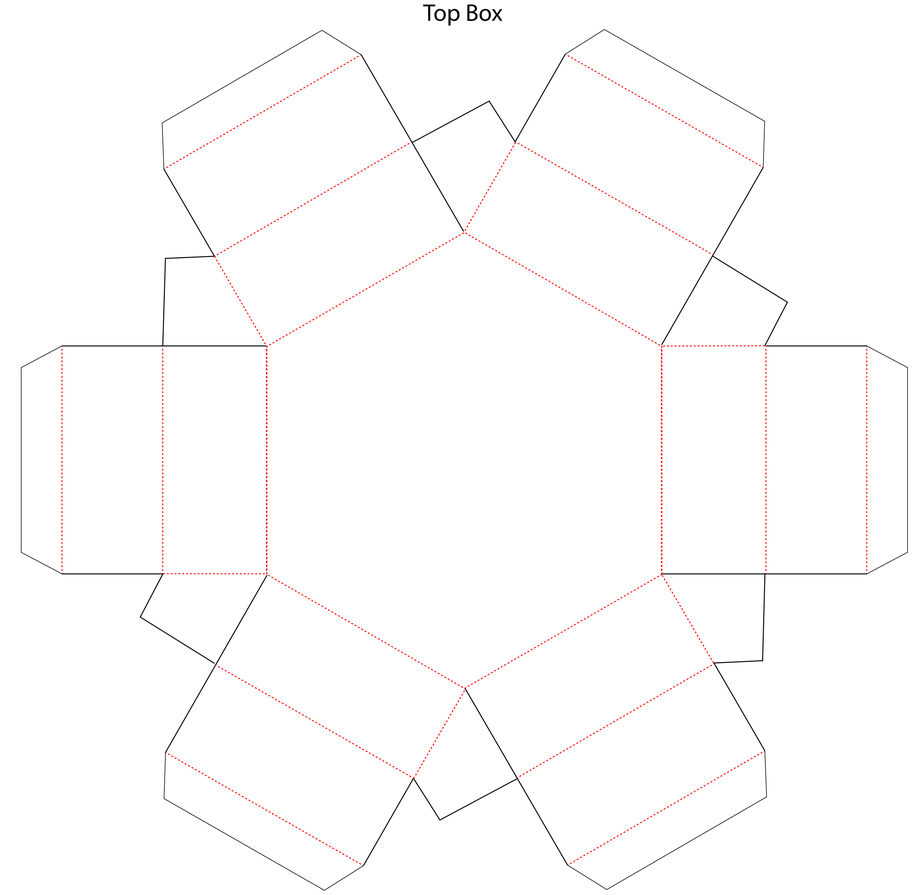

Hard Paper 210-300 gsm
Bottom Box

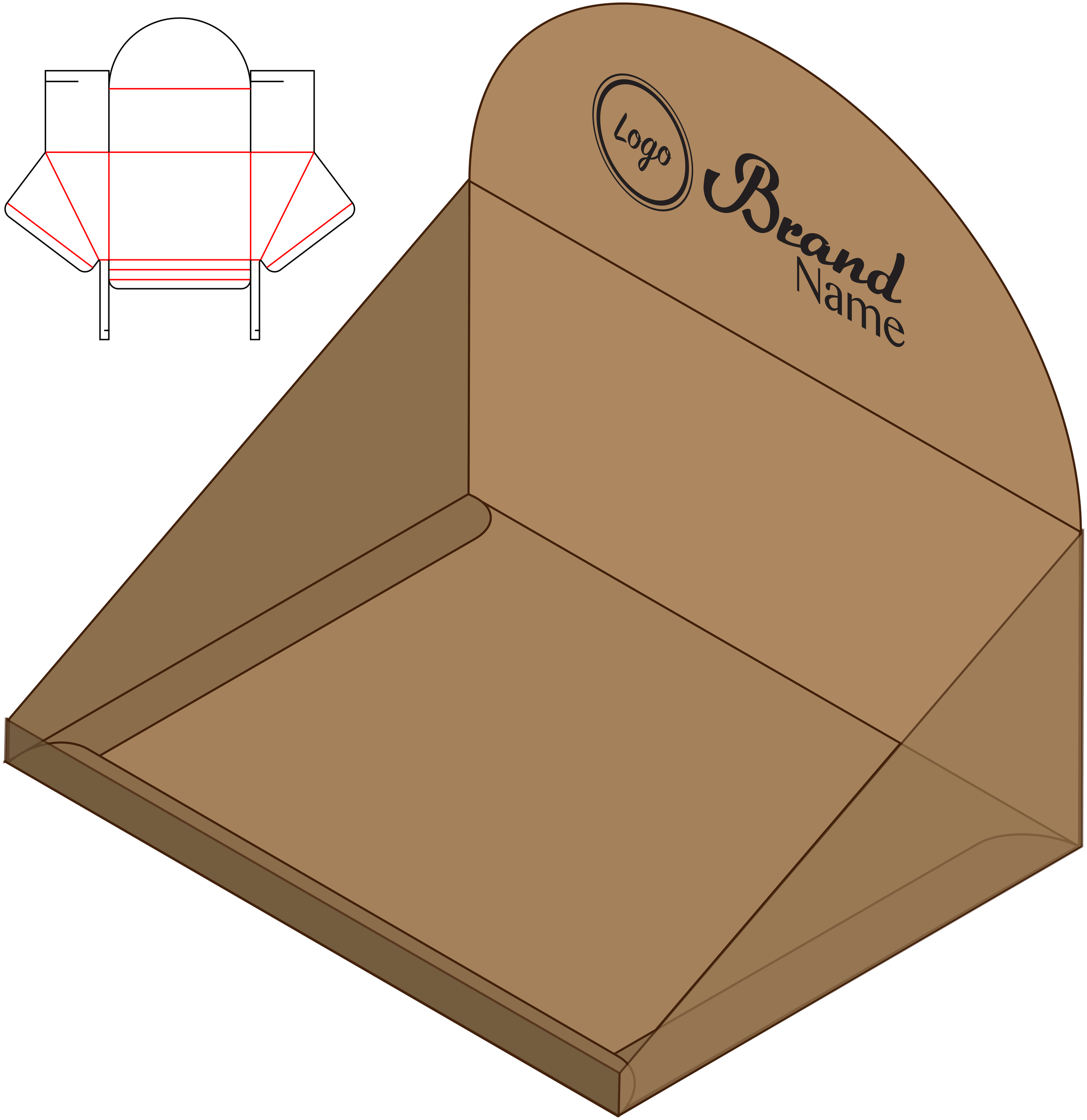
Logo
Brand
Name

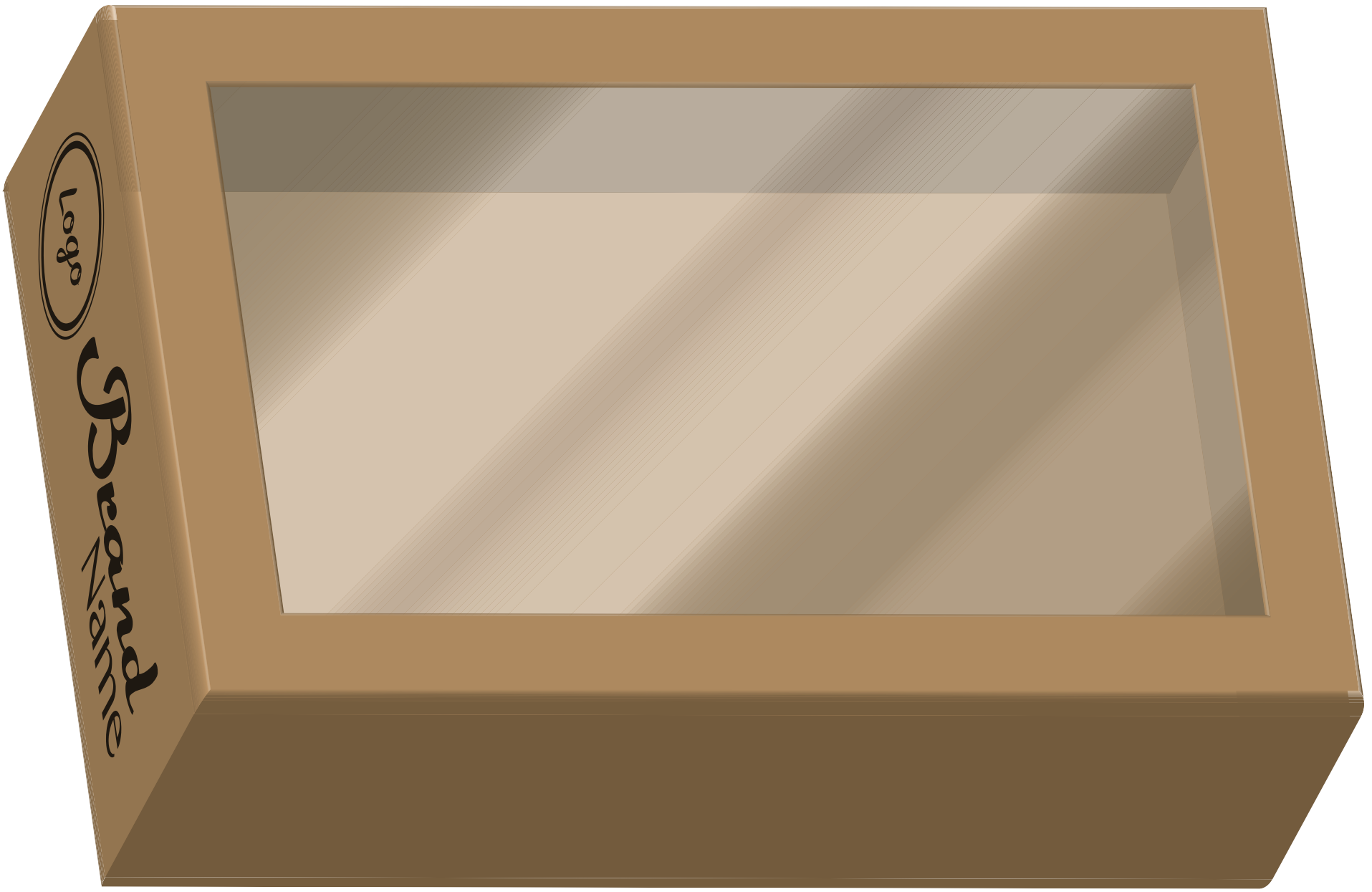

Plastic Sheet 150 micron

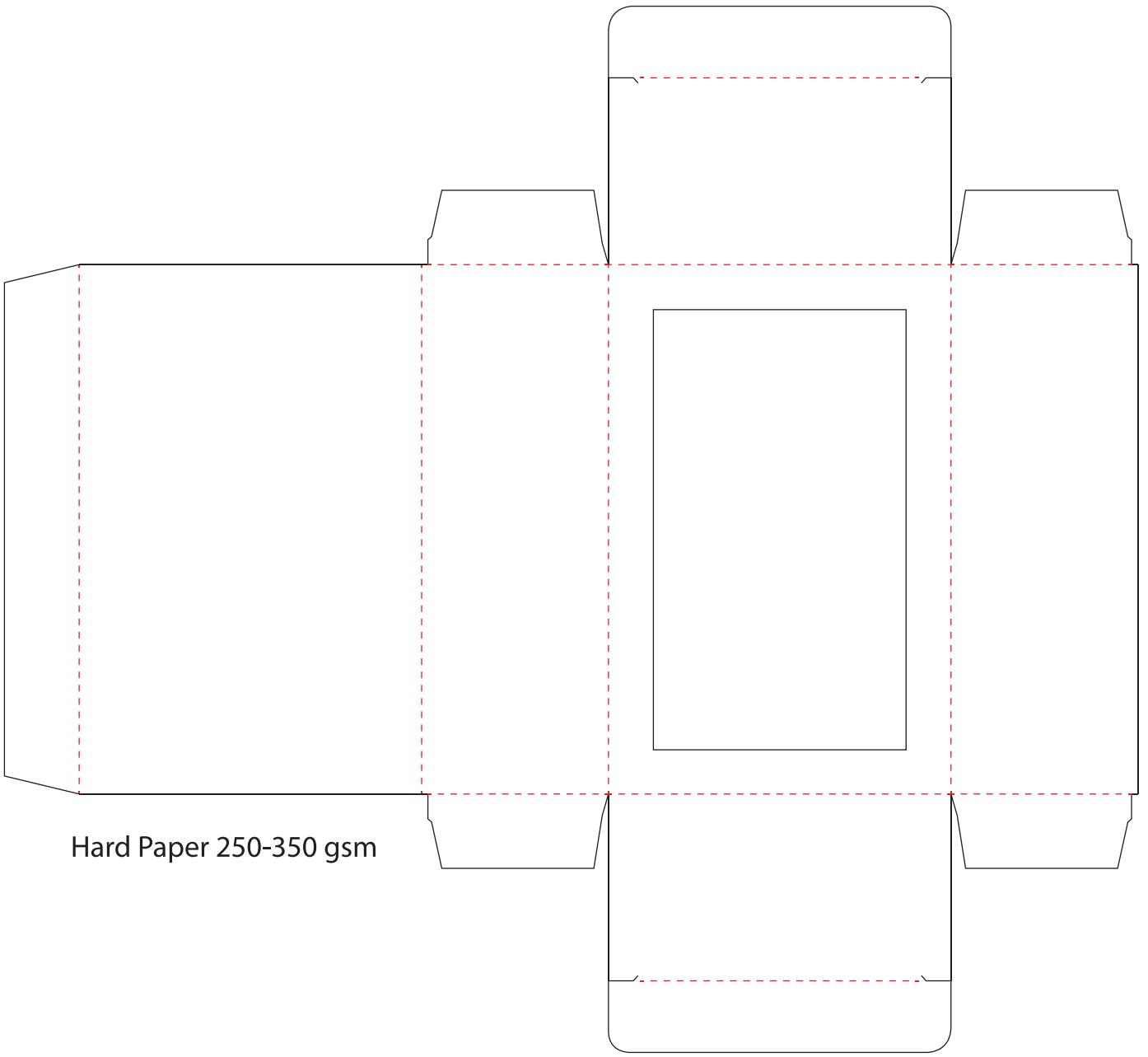

Hard Paper 250-350 gsm

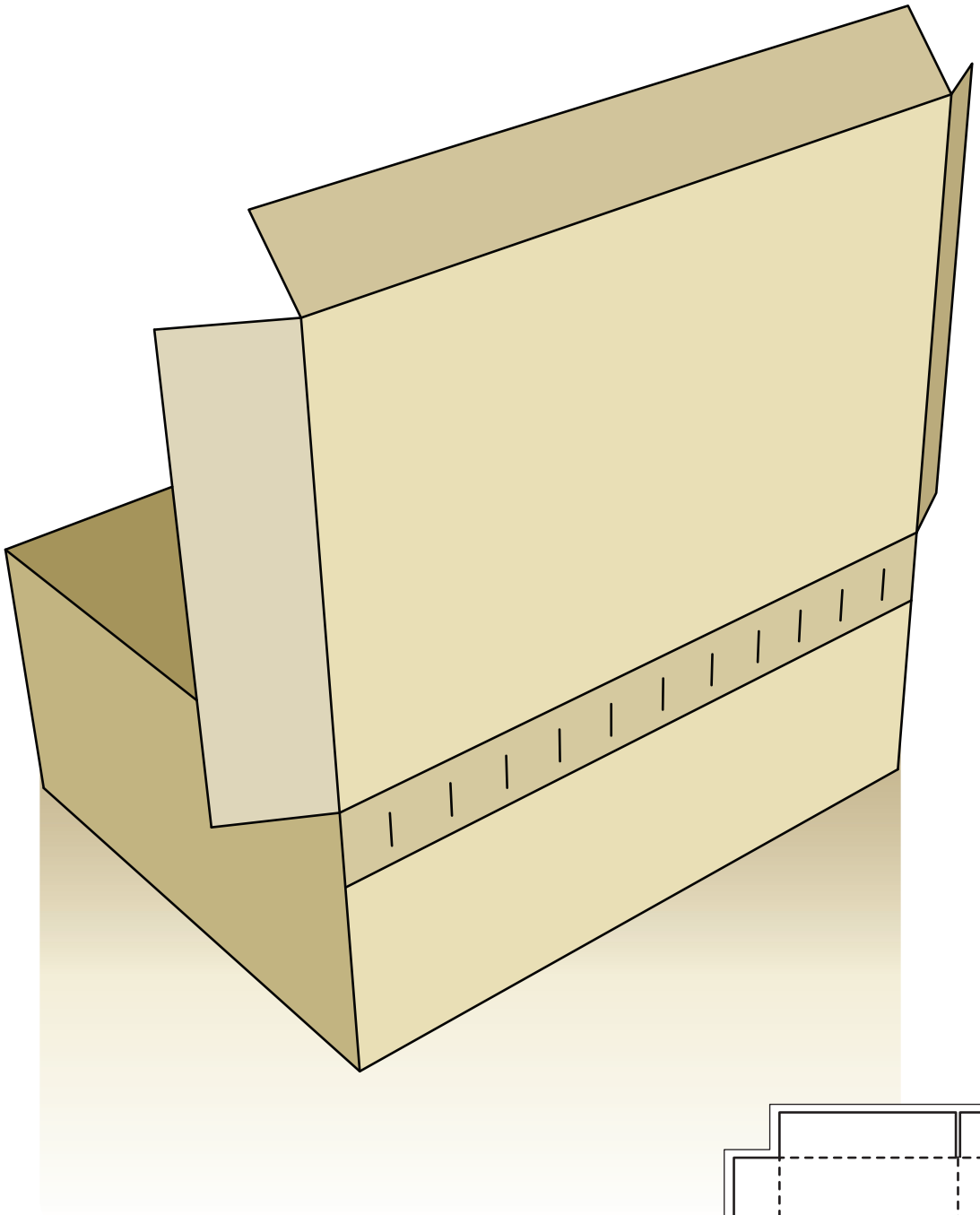

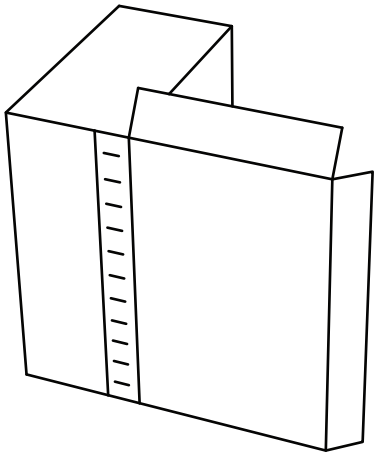

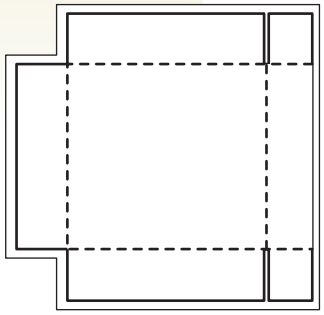

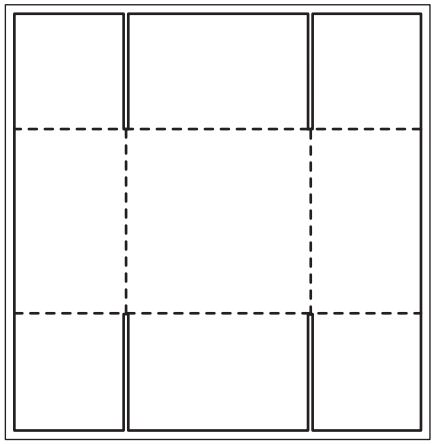

printing bleed

die-cuting line

folding line

perforaion line

zipper line

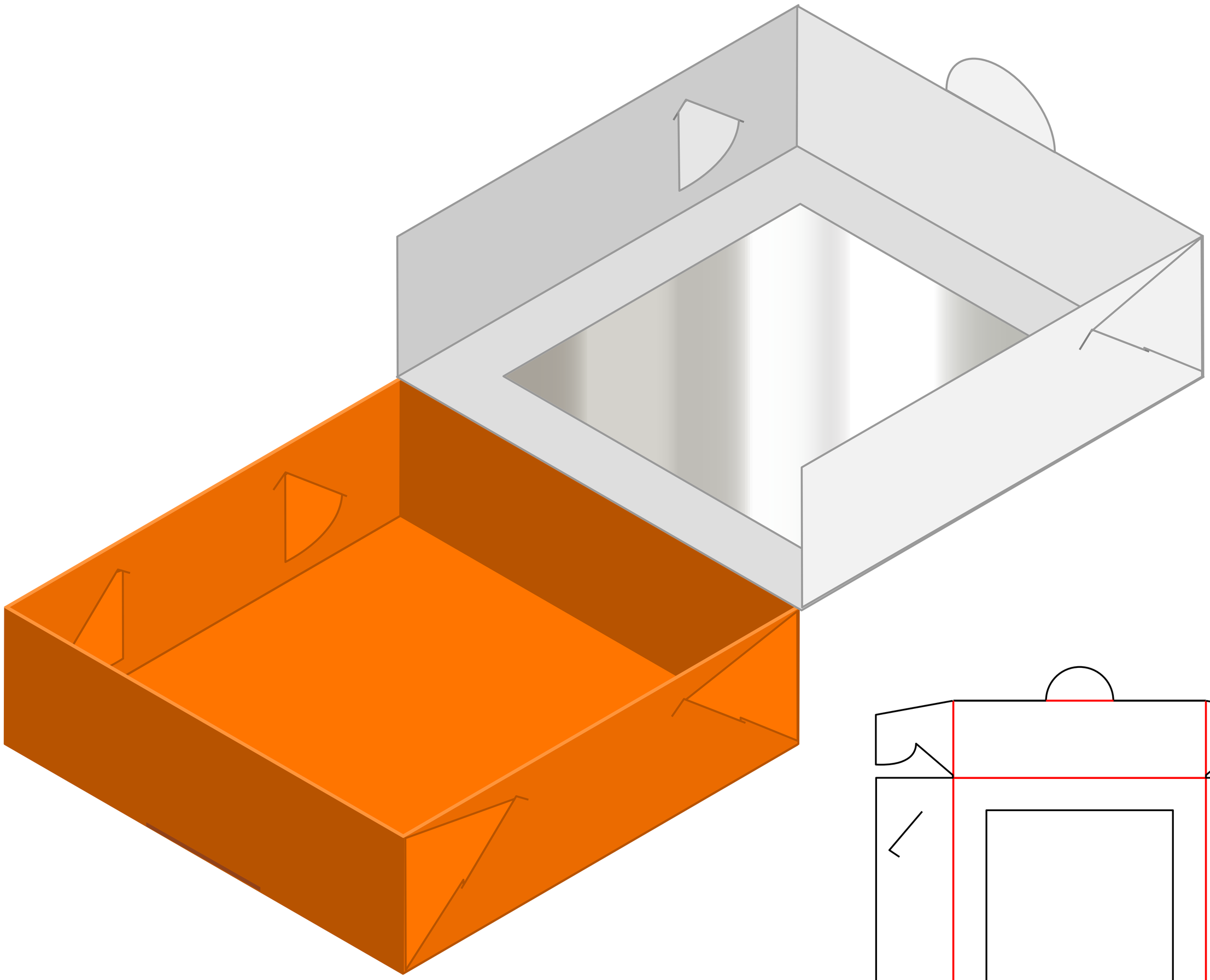

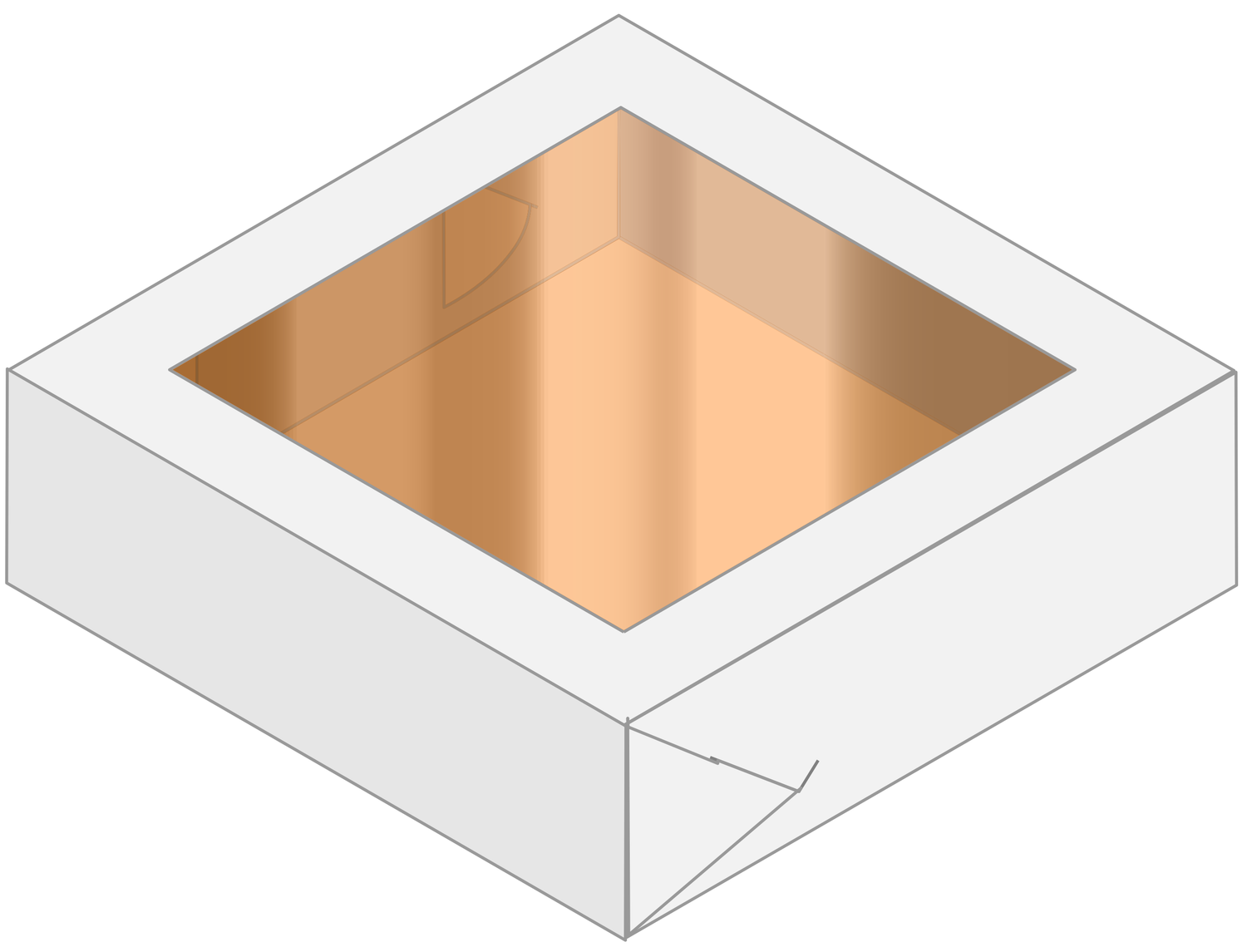

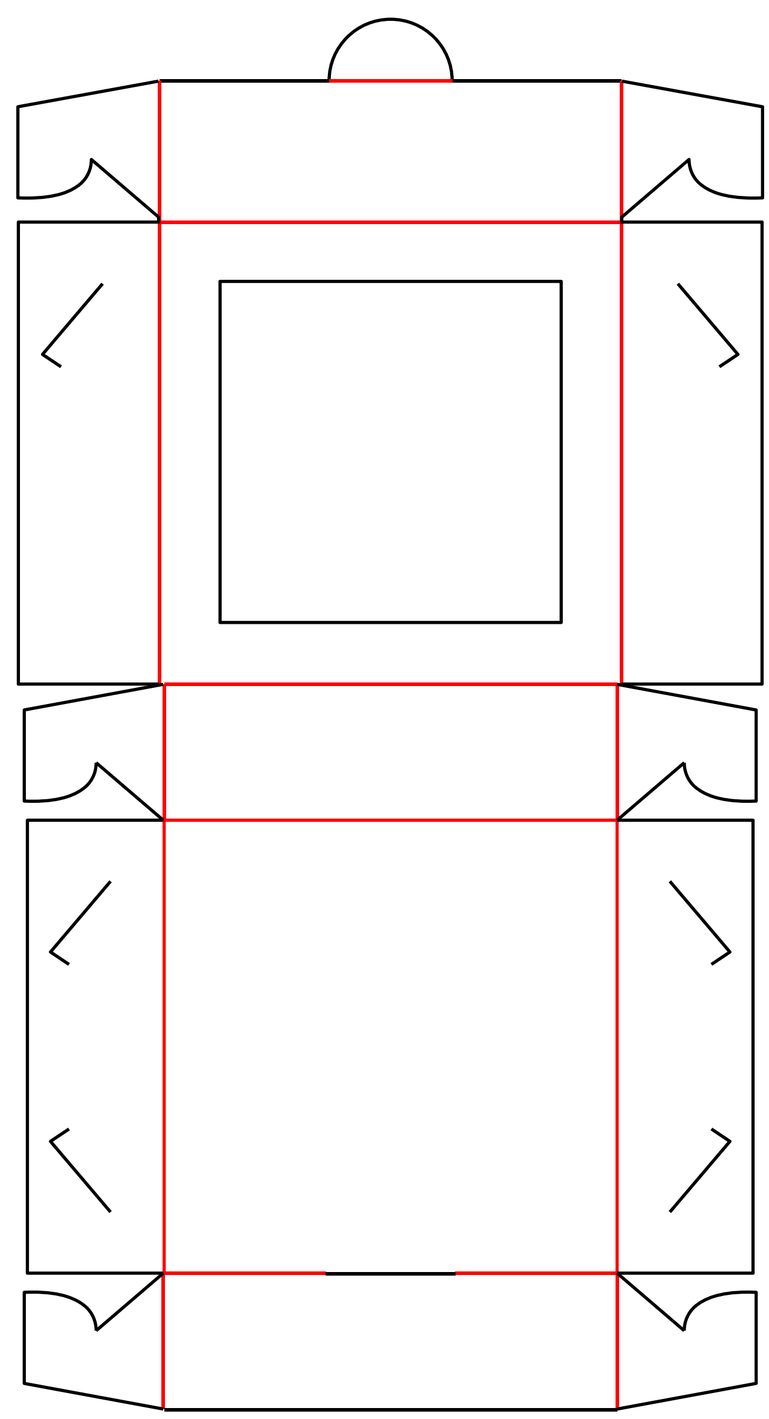

Transparent Plastic Sheet 150 micron

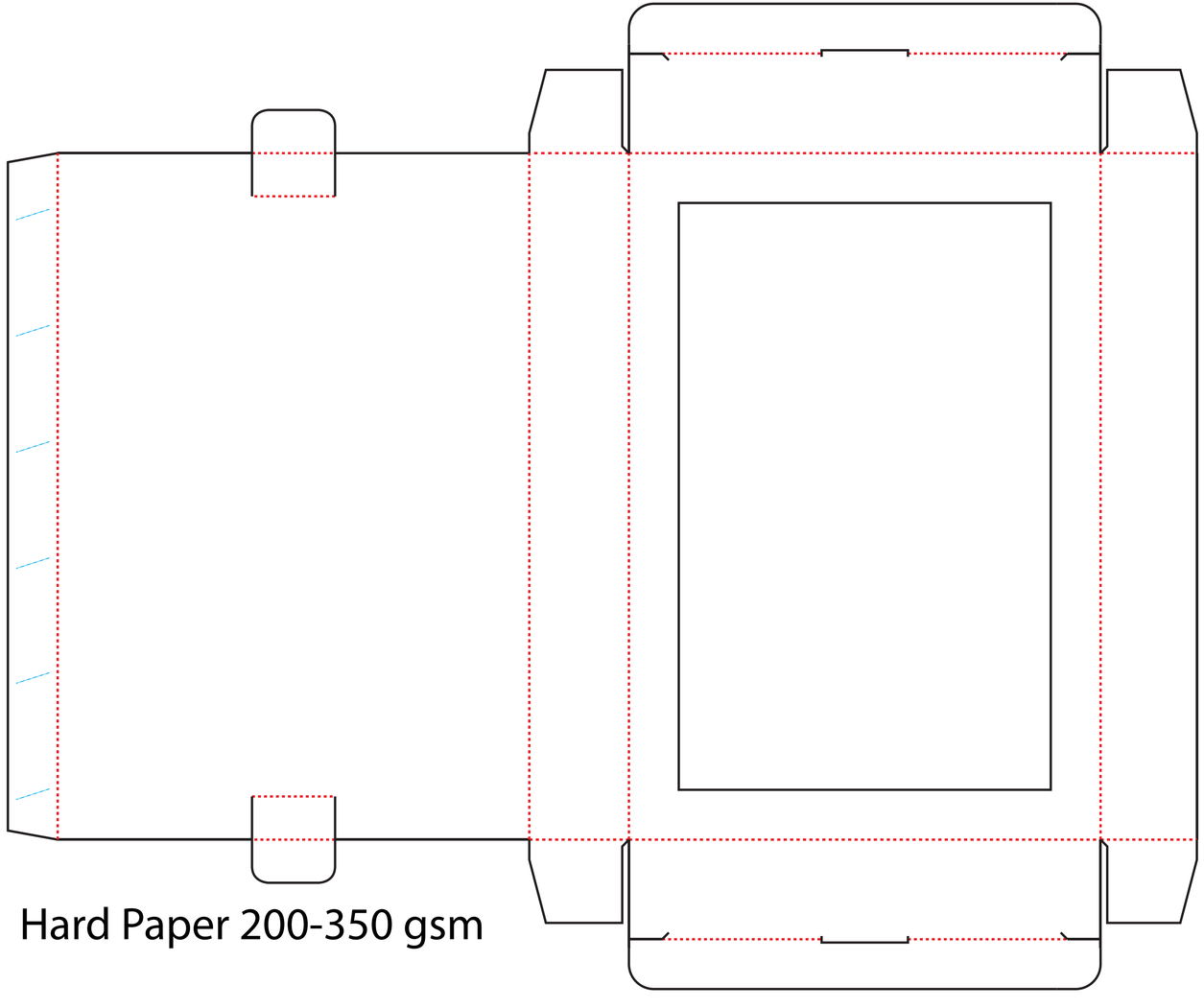

Hard Paper 200-350 gsm

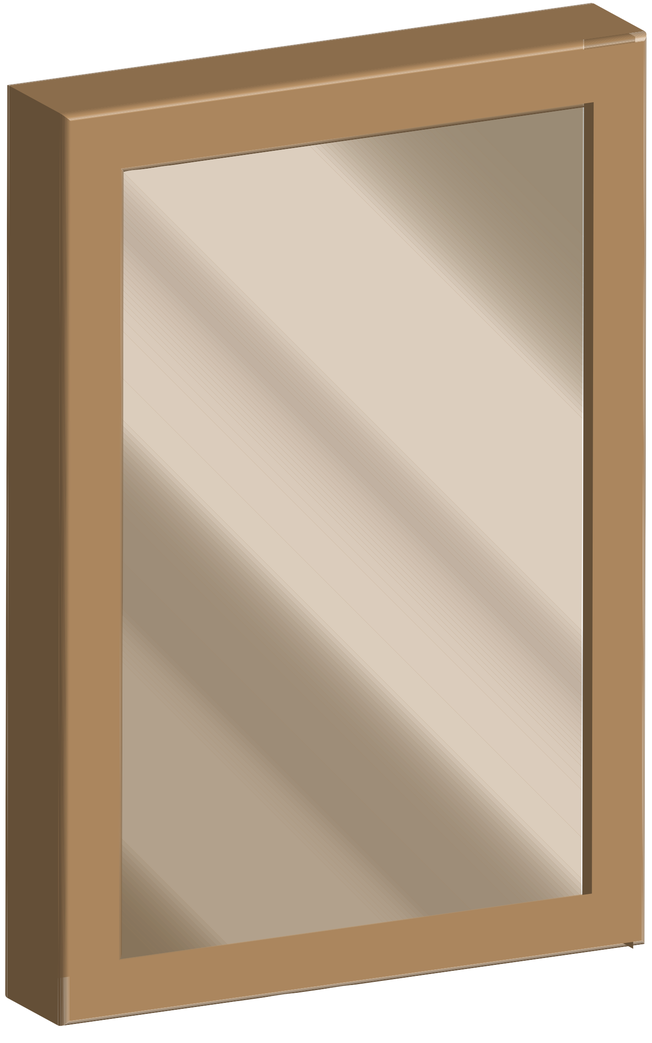

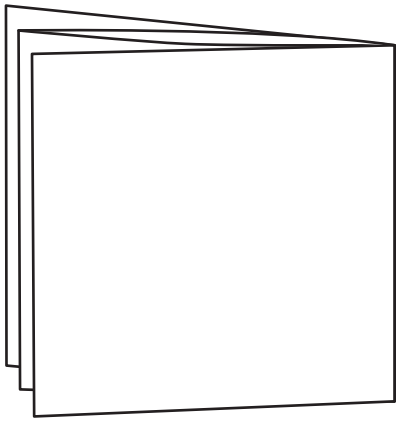

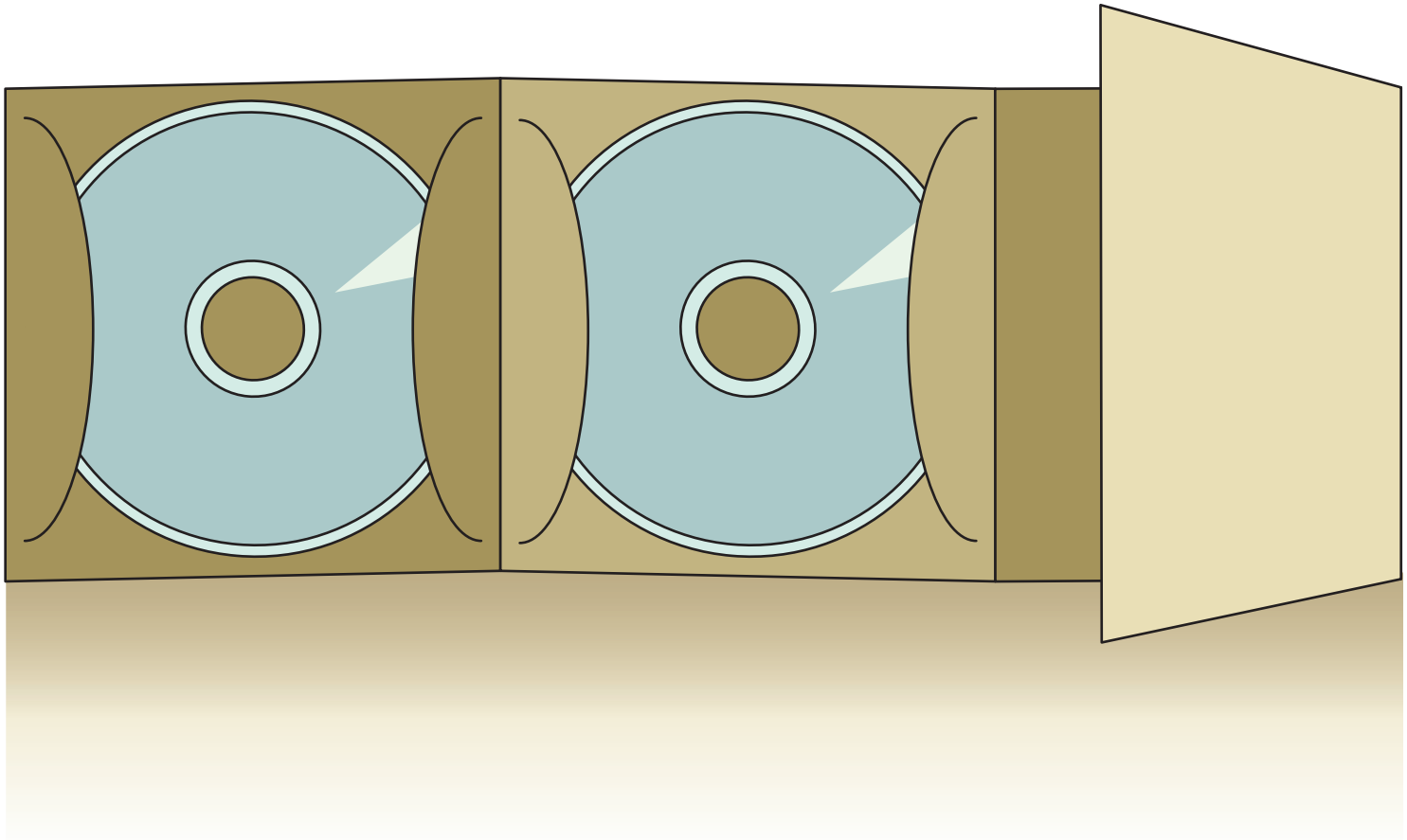

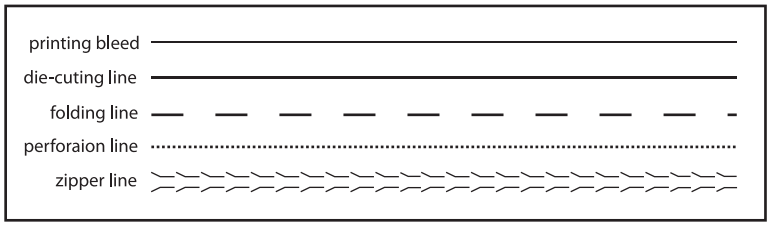
printing bleed
die-cuting line
folding line
perforaion line
zipper line

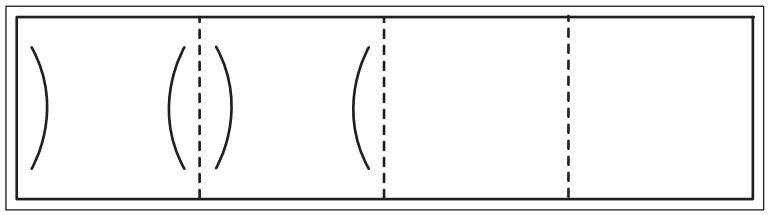

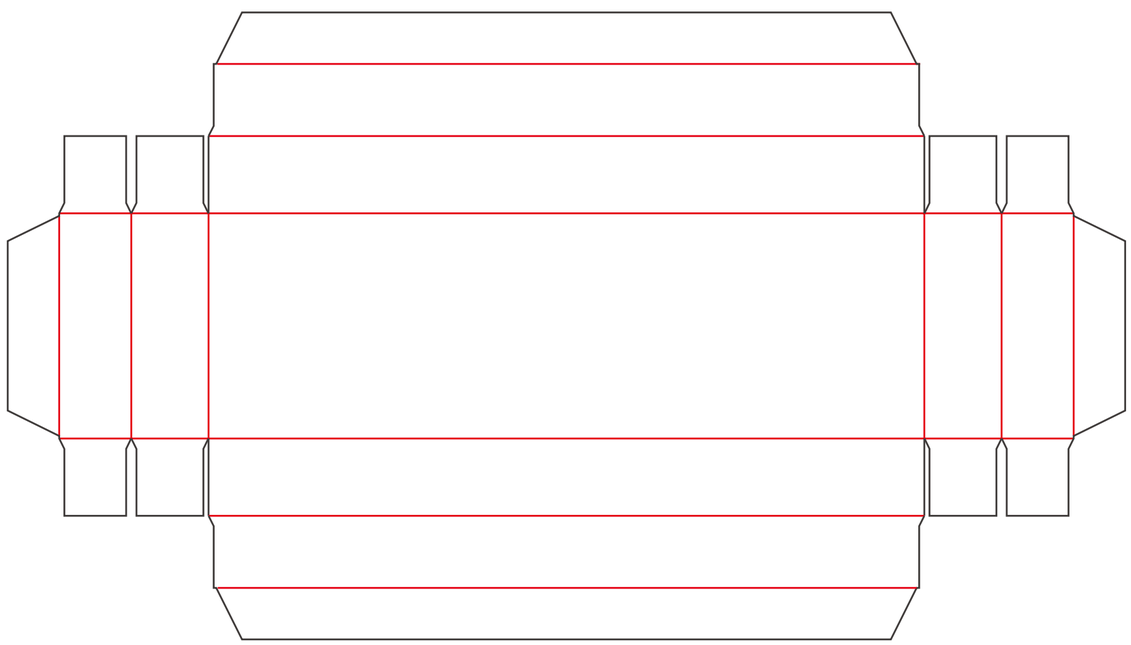

Hard Paper 200-250 gsm
Top Box

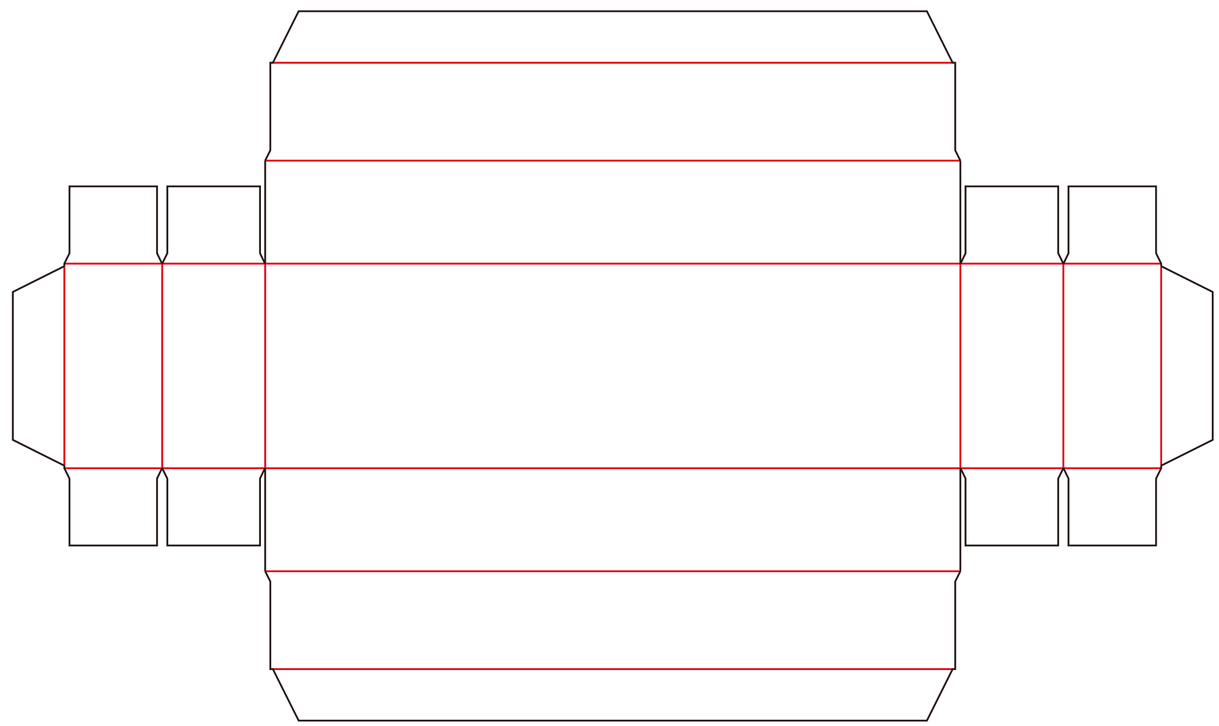

Hard Paper 200-250 gsm
Bottom Box

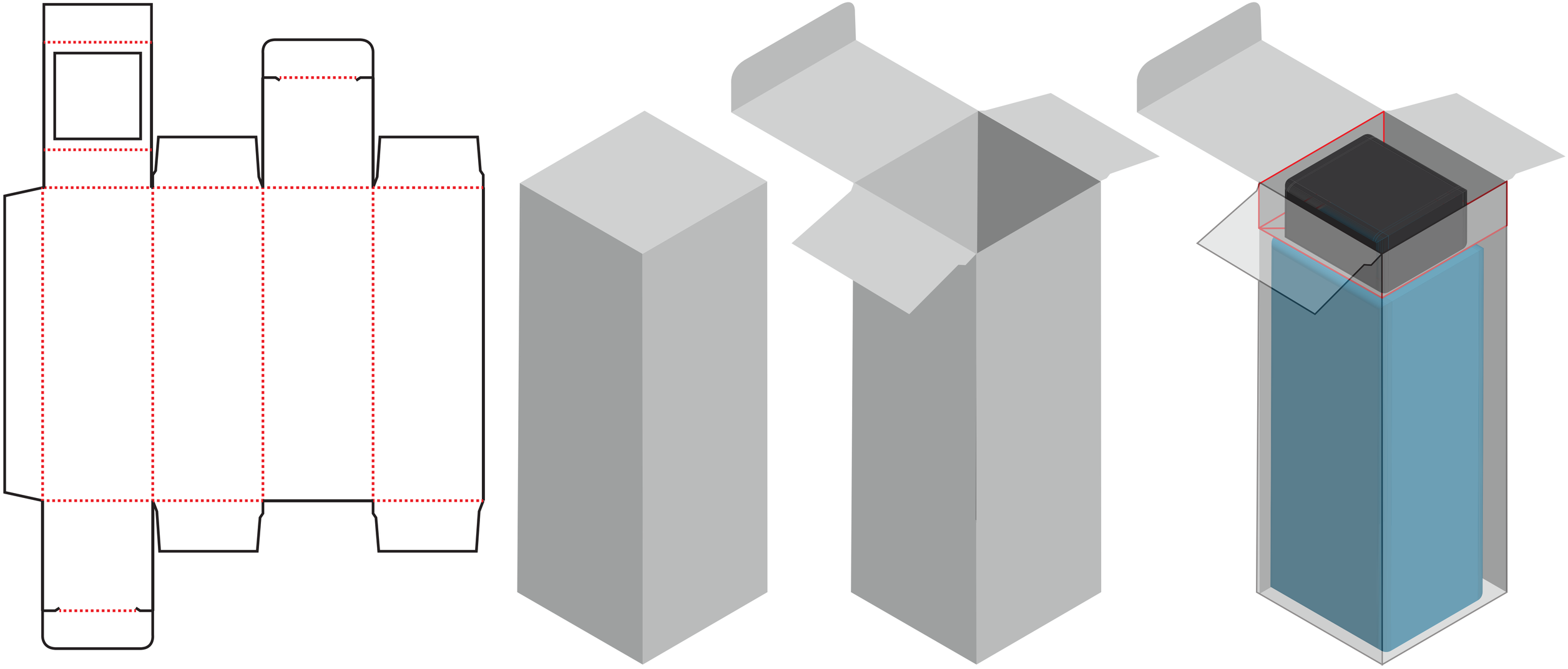

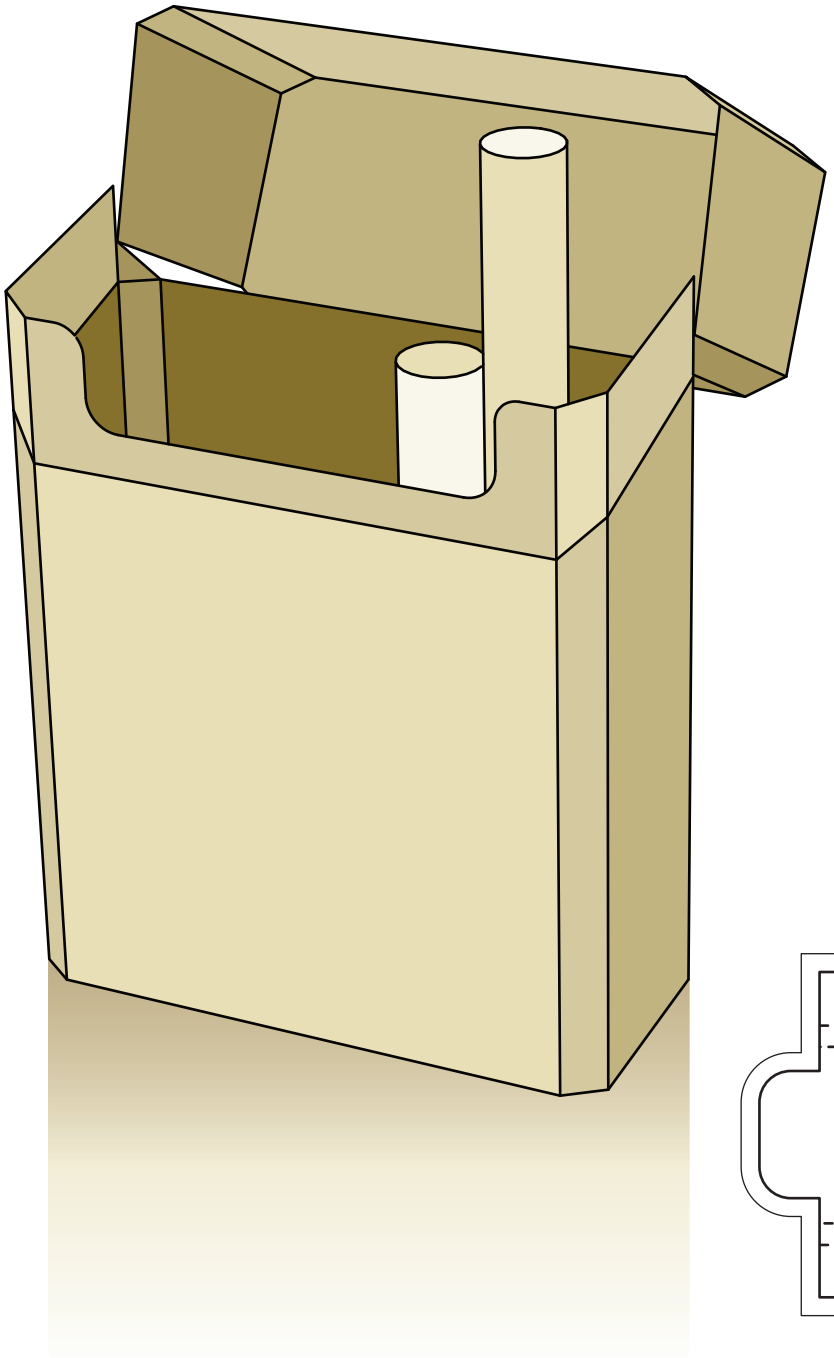

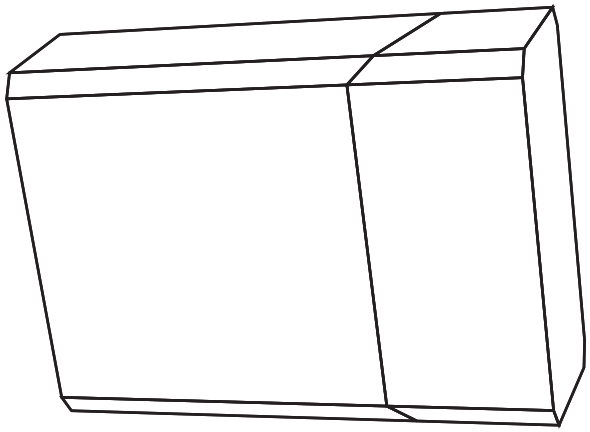

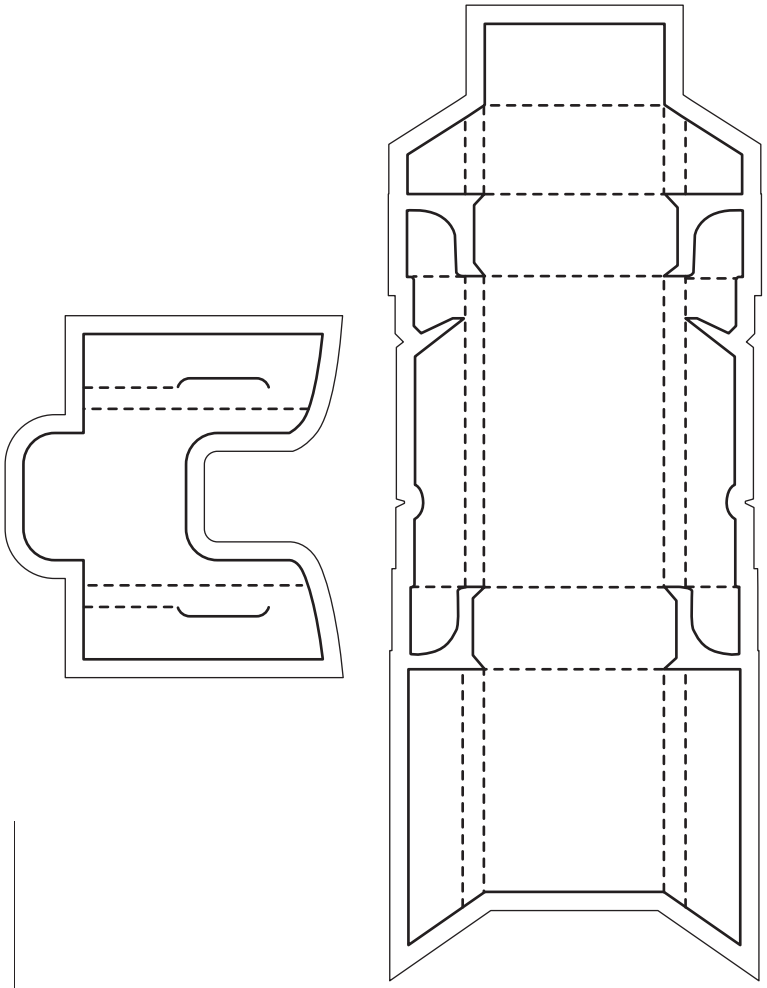

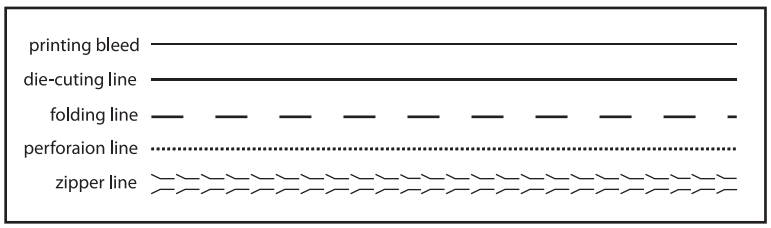
printing bleed
die-cuting line
folding line
perforaion line
zipper line

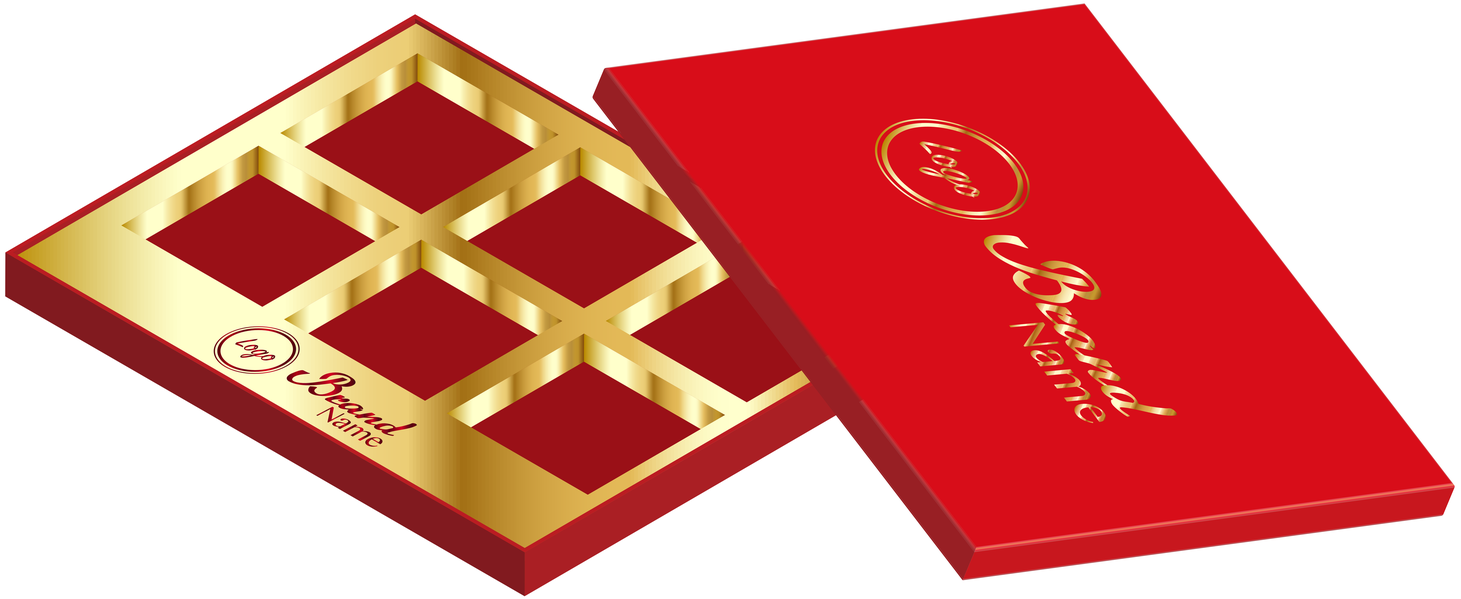

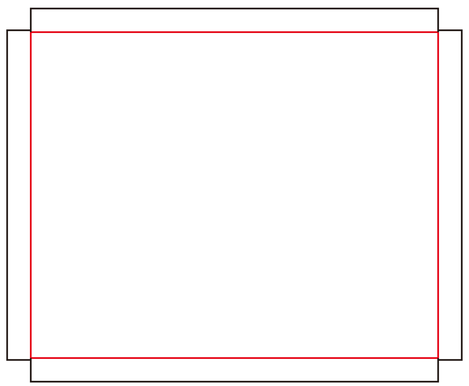

Hard Board Paper
Thick 0.16 cm
Top Box

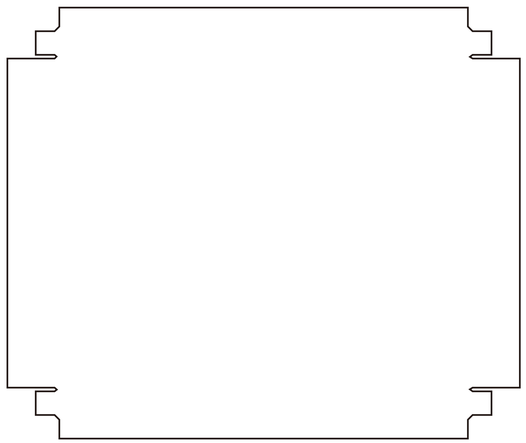

Wrapping Paper
Top Box

Hard Board Paper
Thick 0.16 cm
Bottom Box

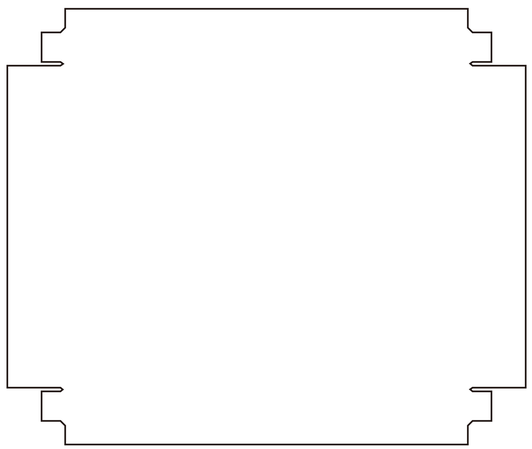

Wrapping Paper
Bottom Box

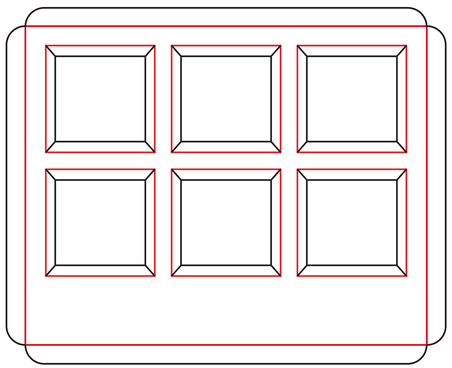

Hard Paper 300-350 gsm
Product Support

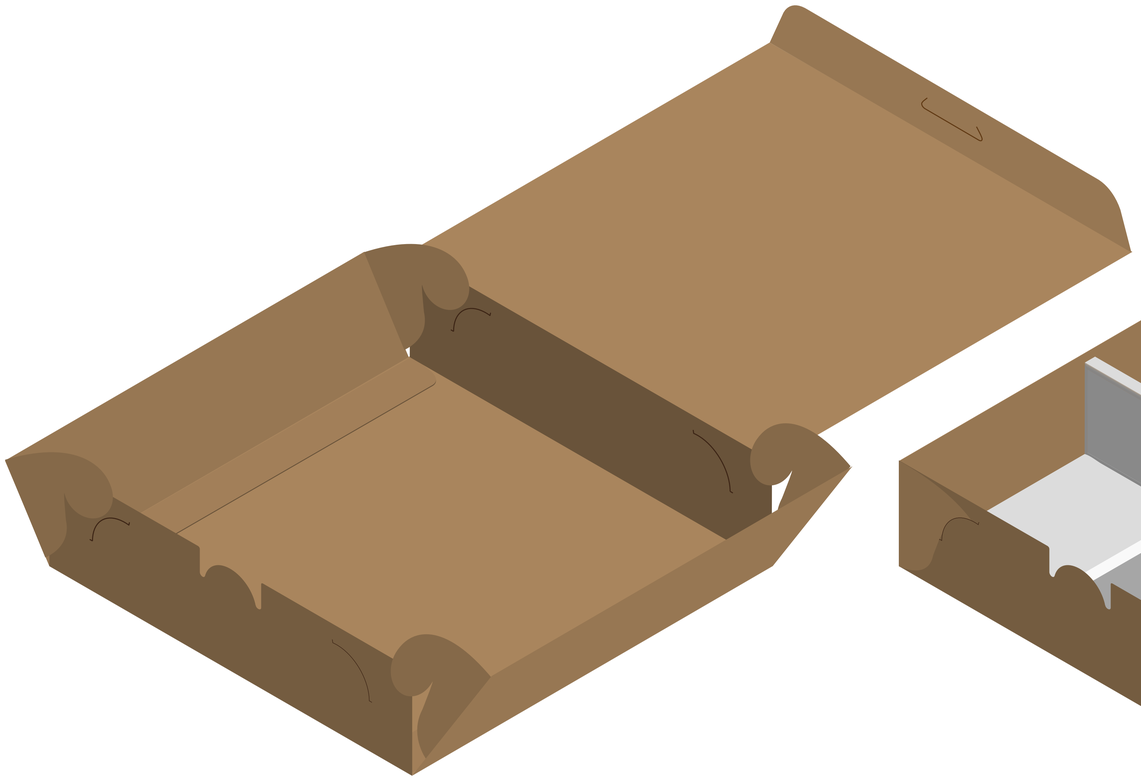

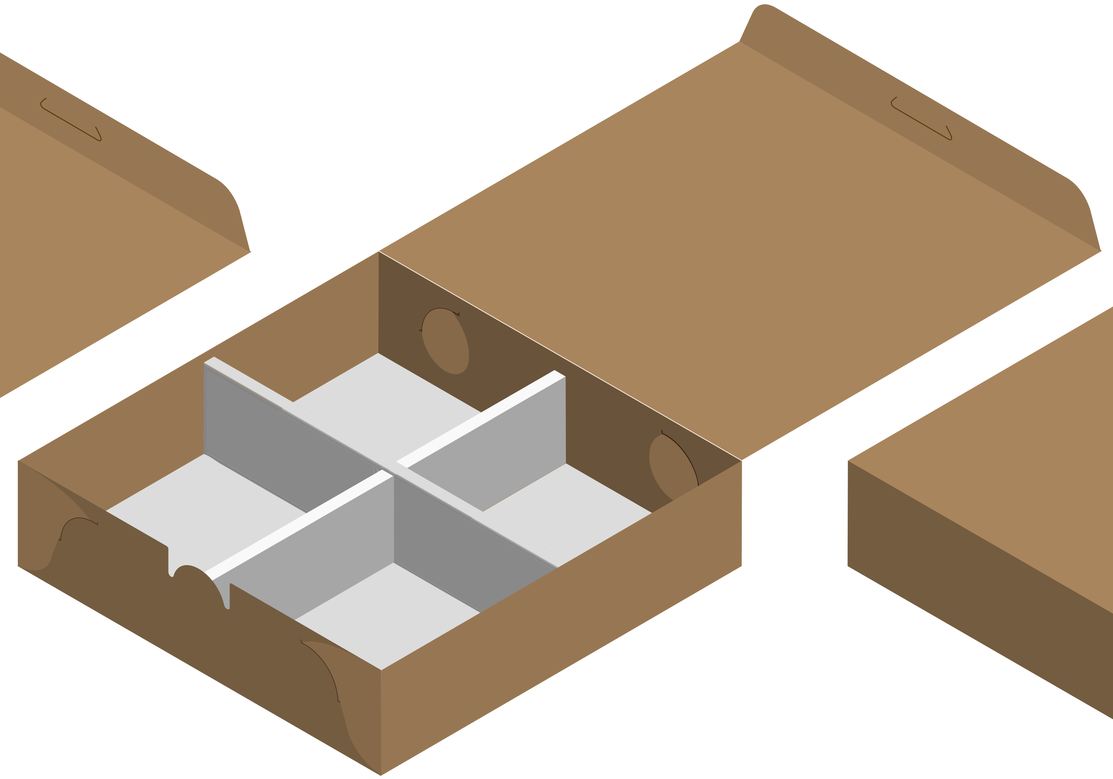

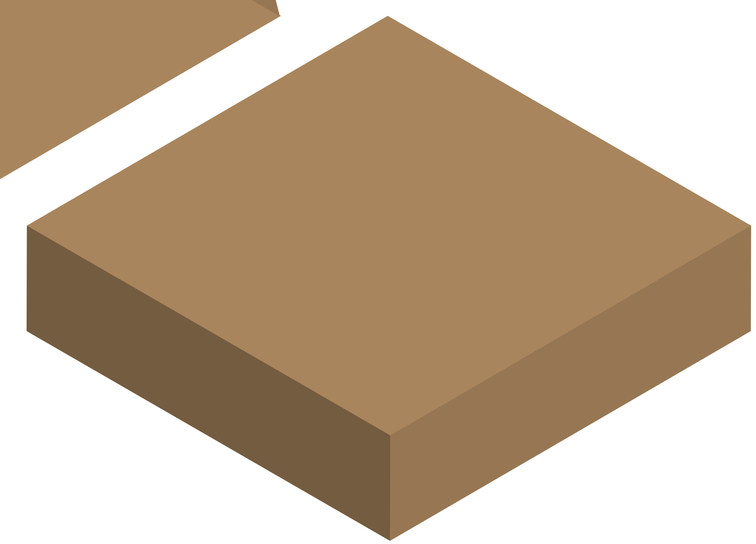

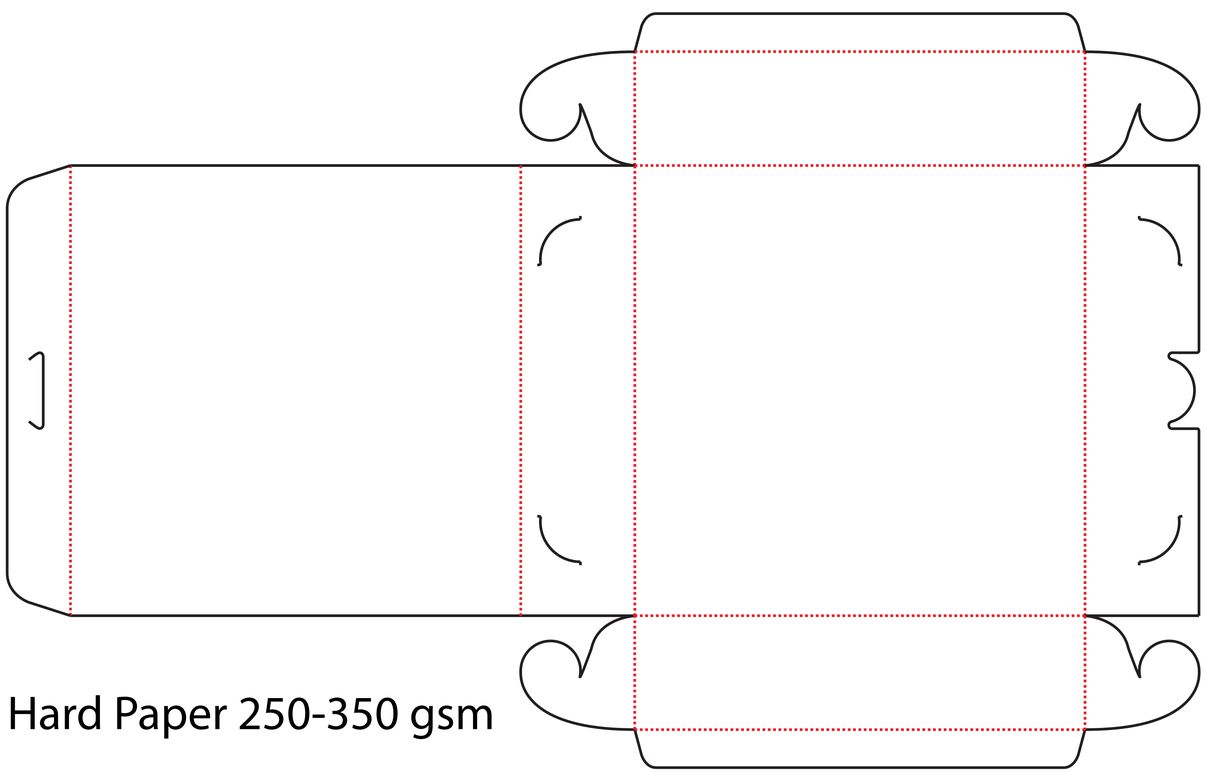

Hard Paper 250-350 gsm

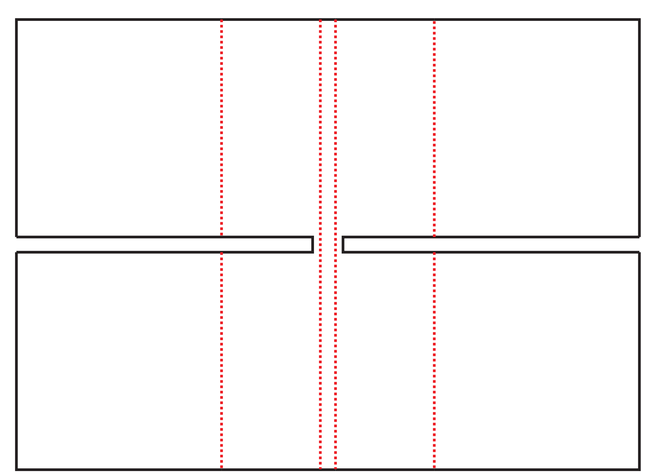

Hard Paper 200-350 gsm

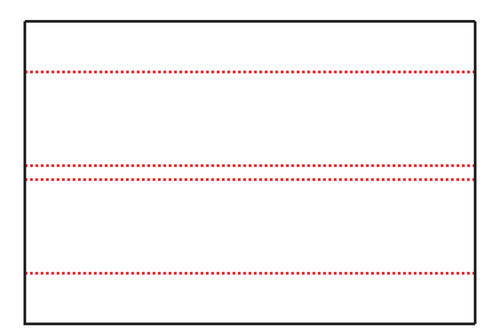

Hard Paper 200-350 gsm

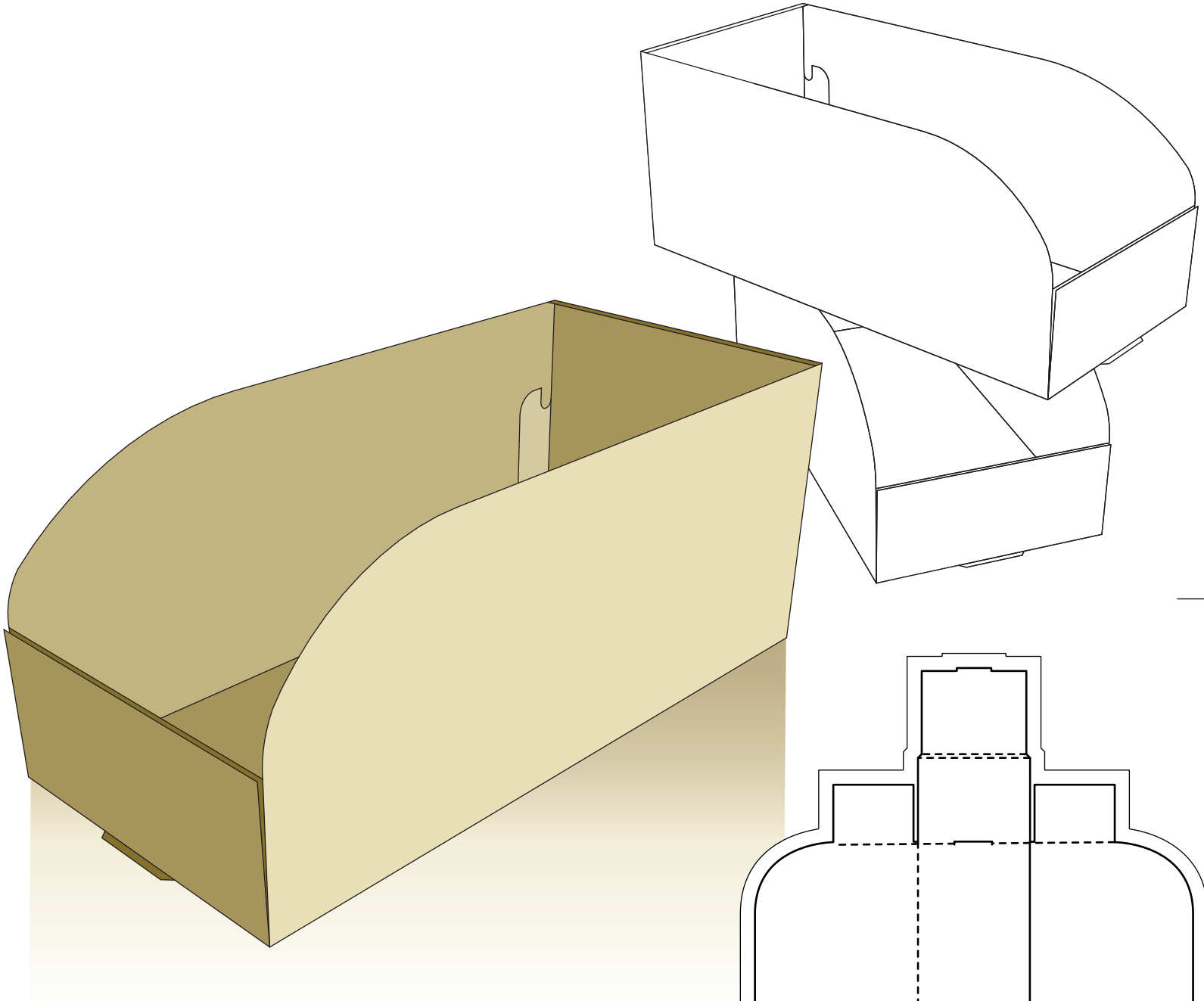

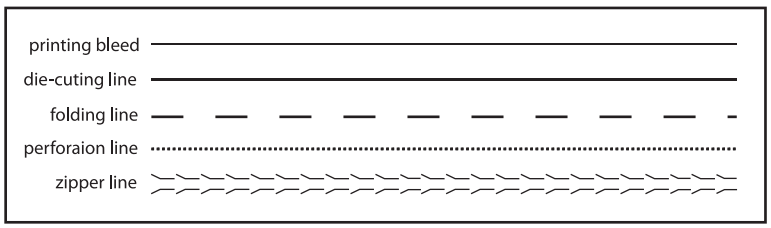
printing bleed
die-cuting line
folding line
perforaion line
zipper line

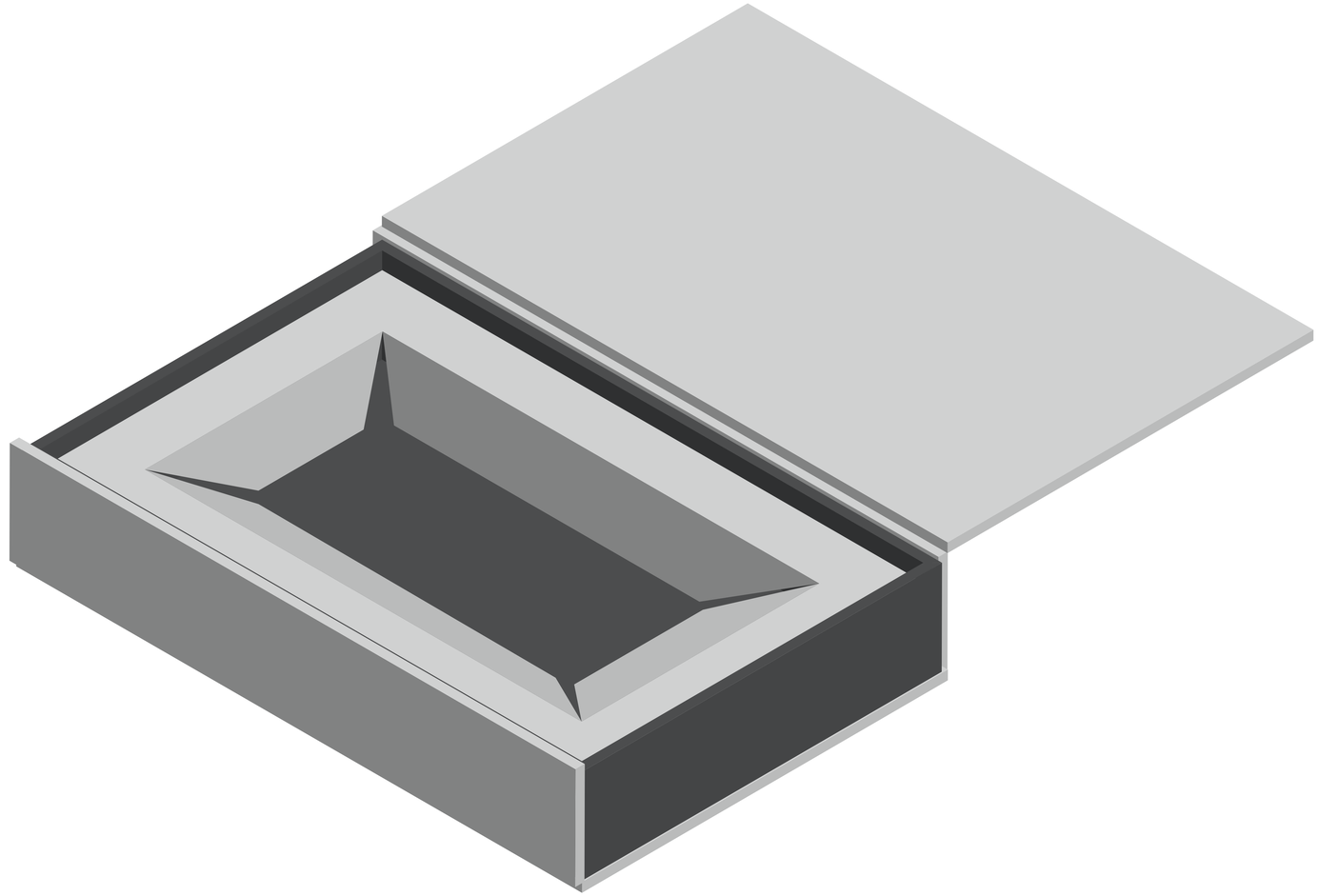

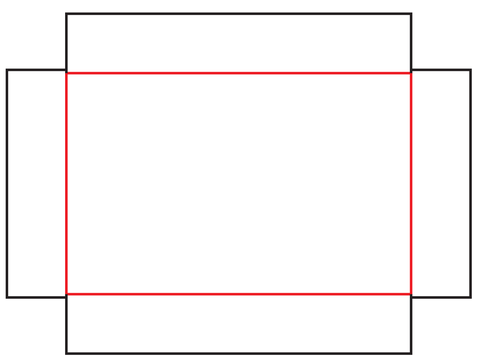

Hard Board Paper
Thick 0.14 cm
Inside Box

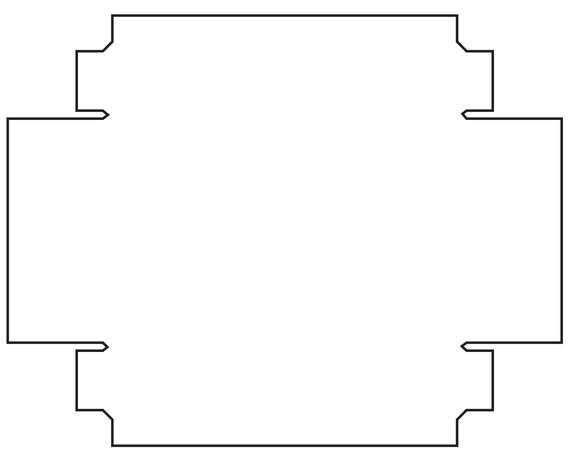

Wrapping Paper
Inside Box

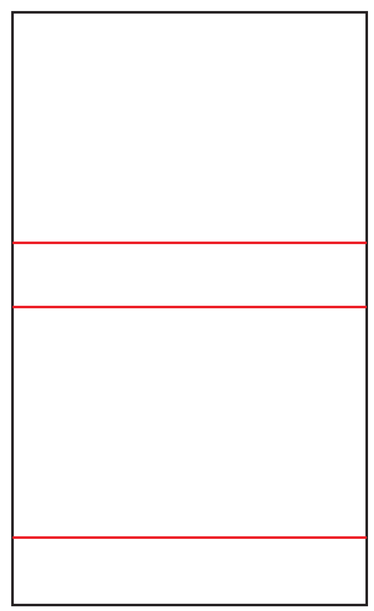

Hard Board Paper
Thick 0.14 cm
Cover Box

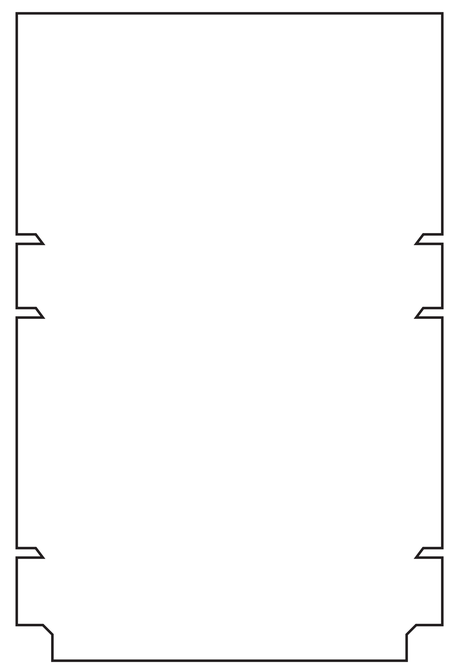

Wrapping Paper
Cover Box

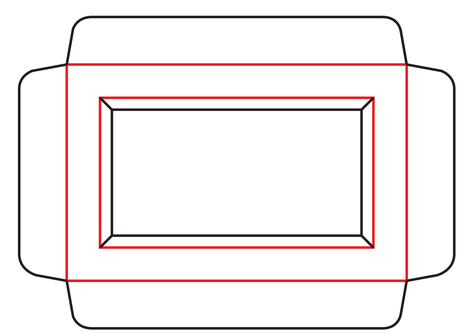

Hard Paper
300-350 gsm
Product Support

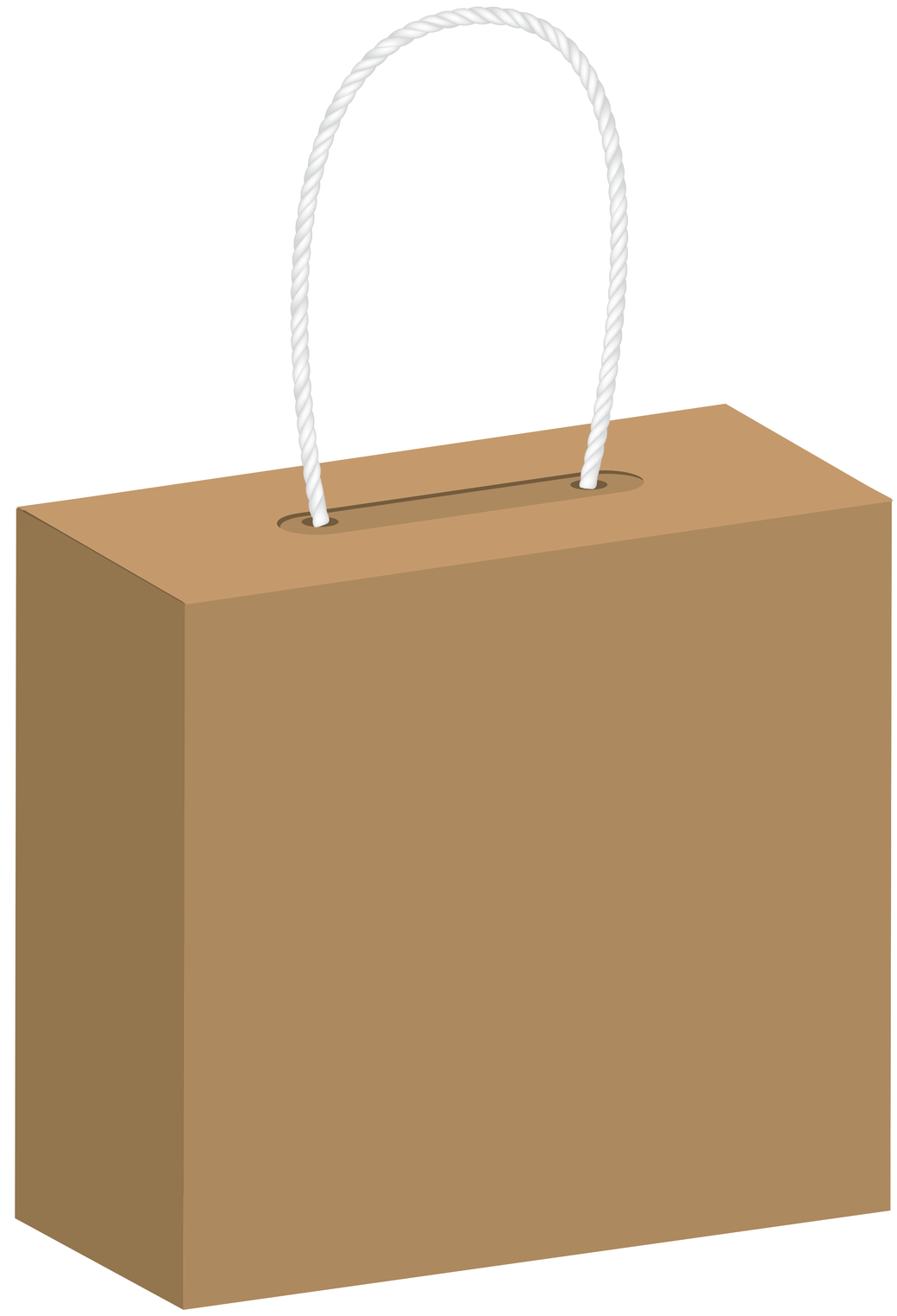

Corrugated Paper E Flute

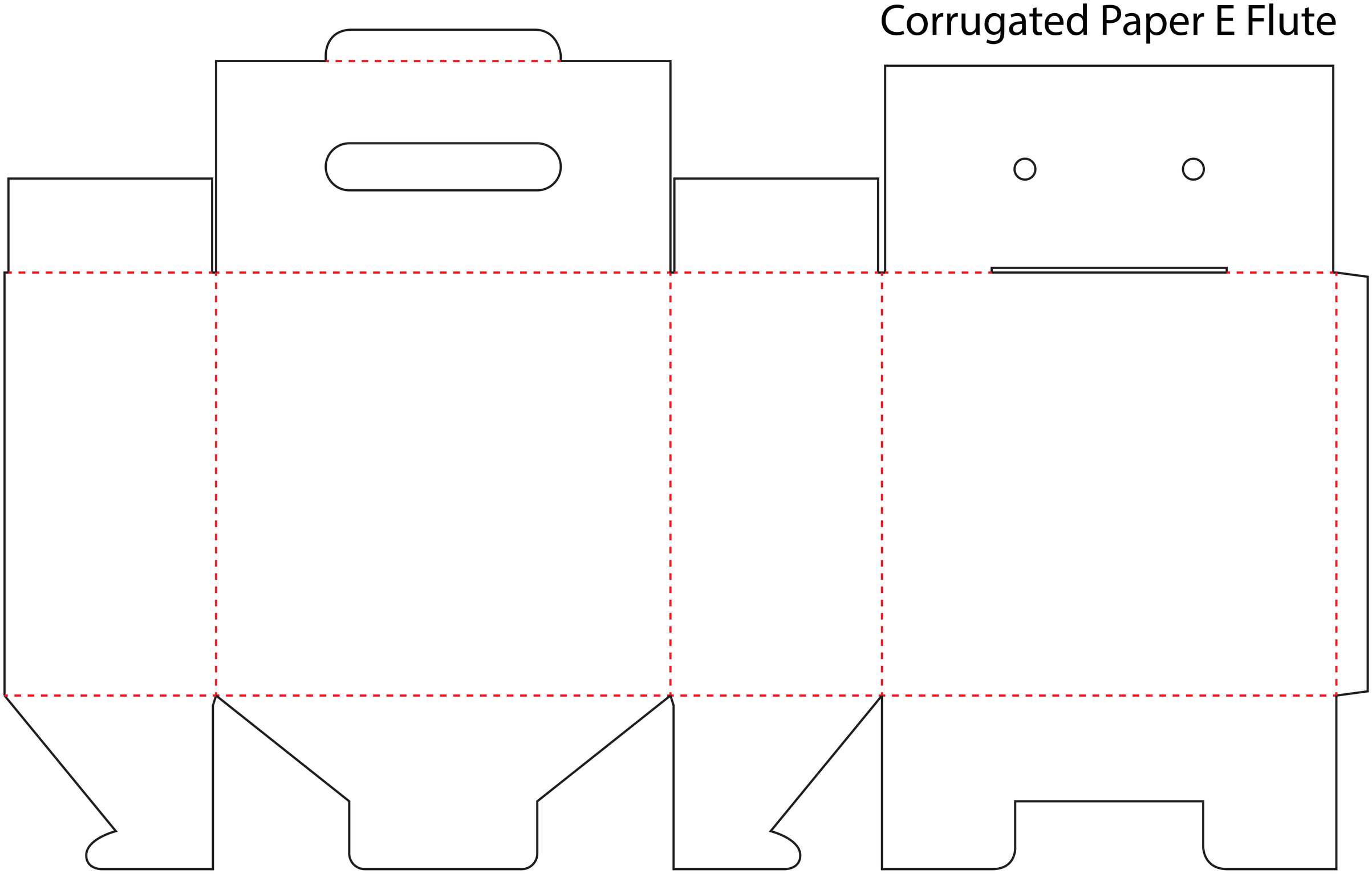

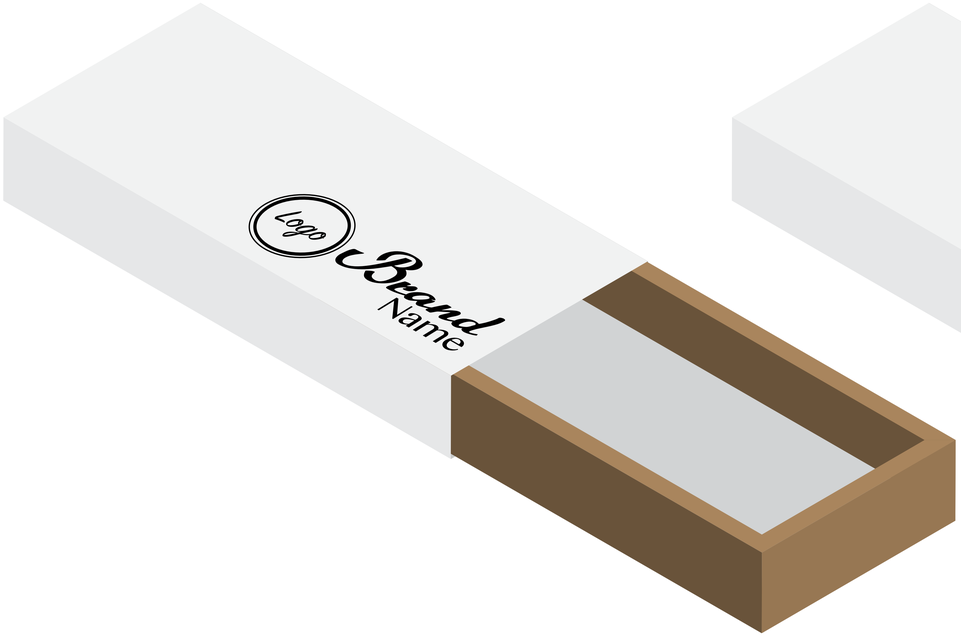

Hard paper
250-300 gsm
Sleeve Box

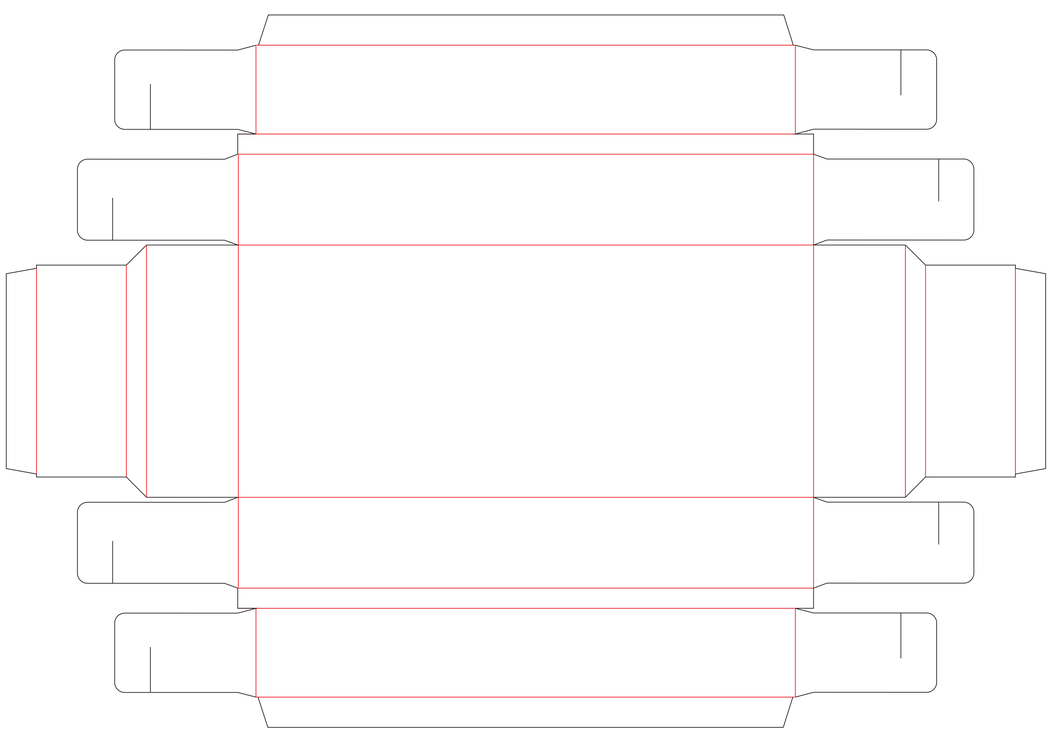

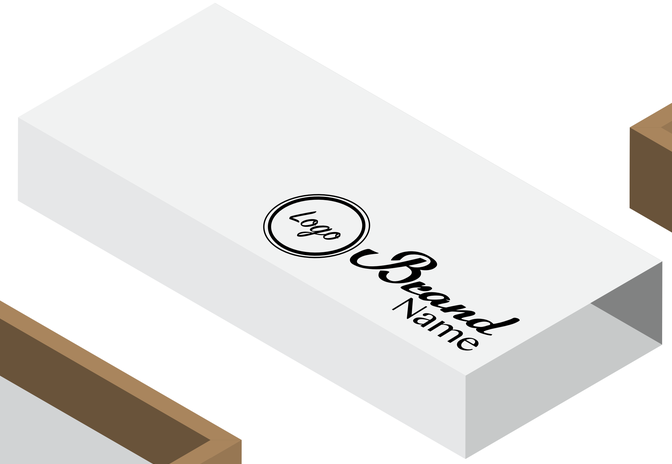

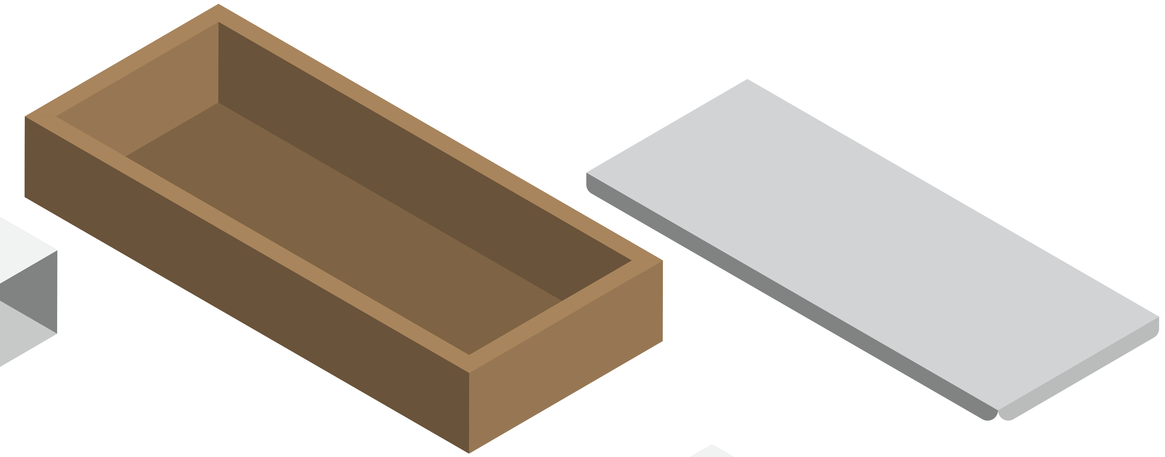

Hard paper
250-300 gsm
Box

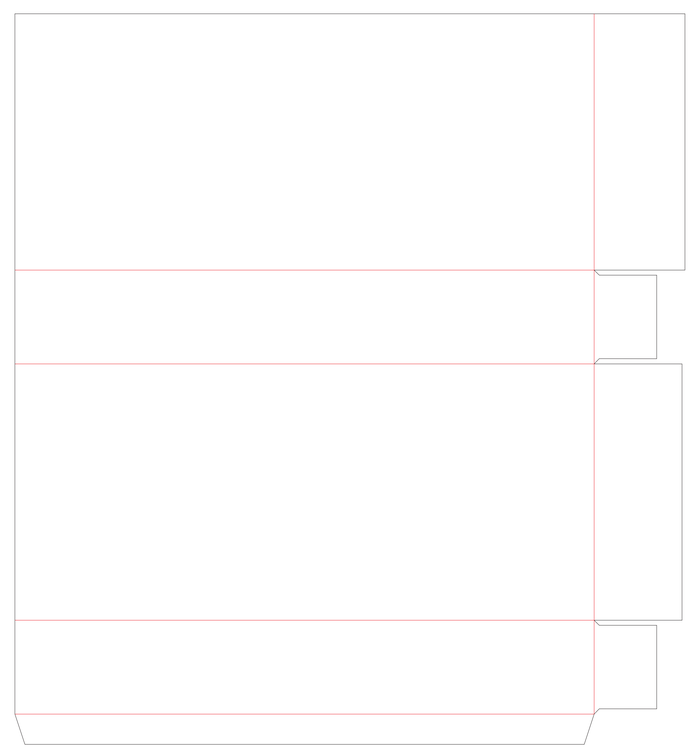

Hard paper
300-350 gsm
Support

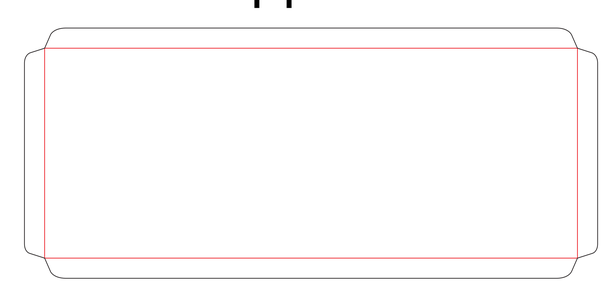

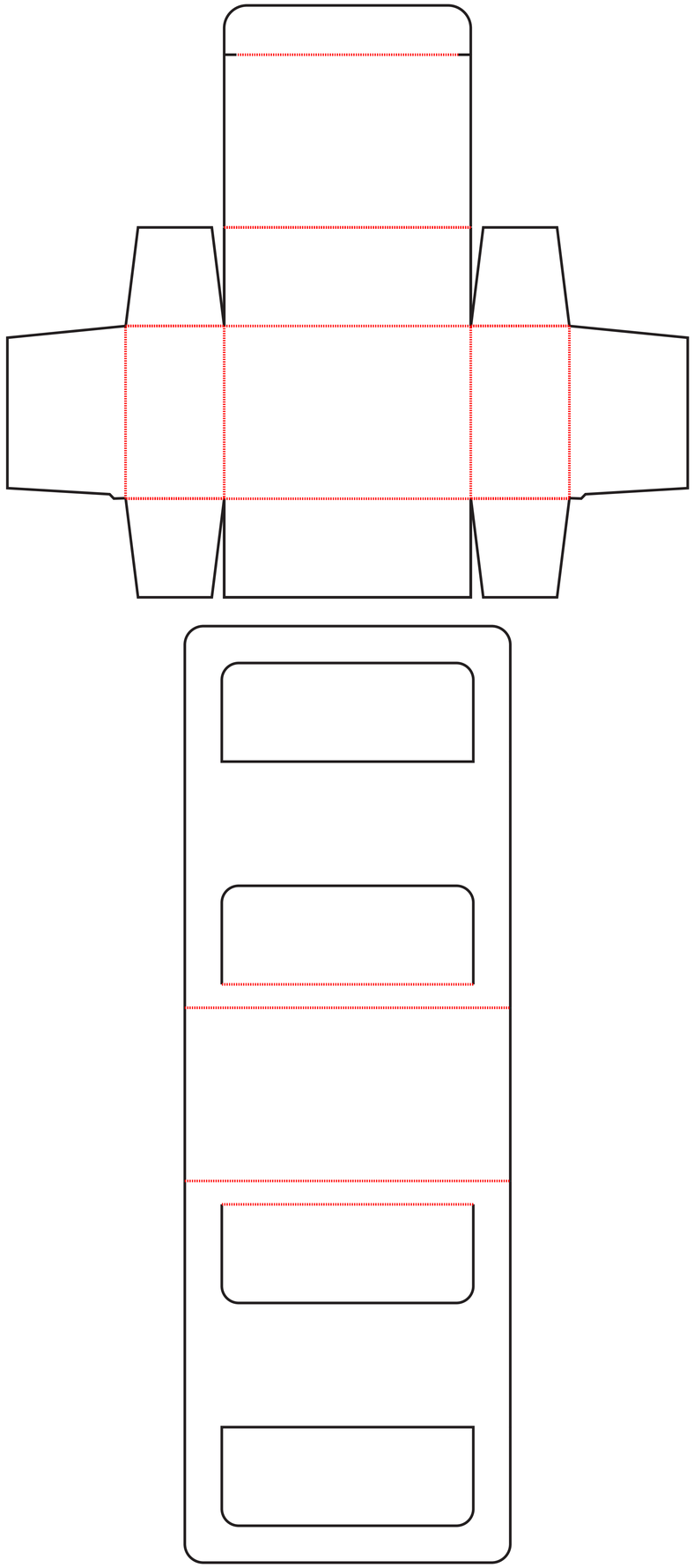

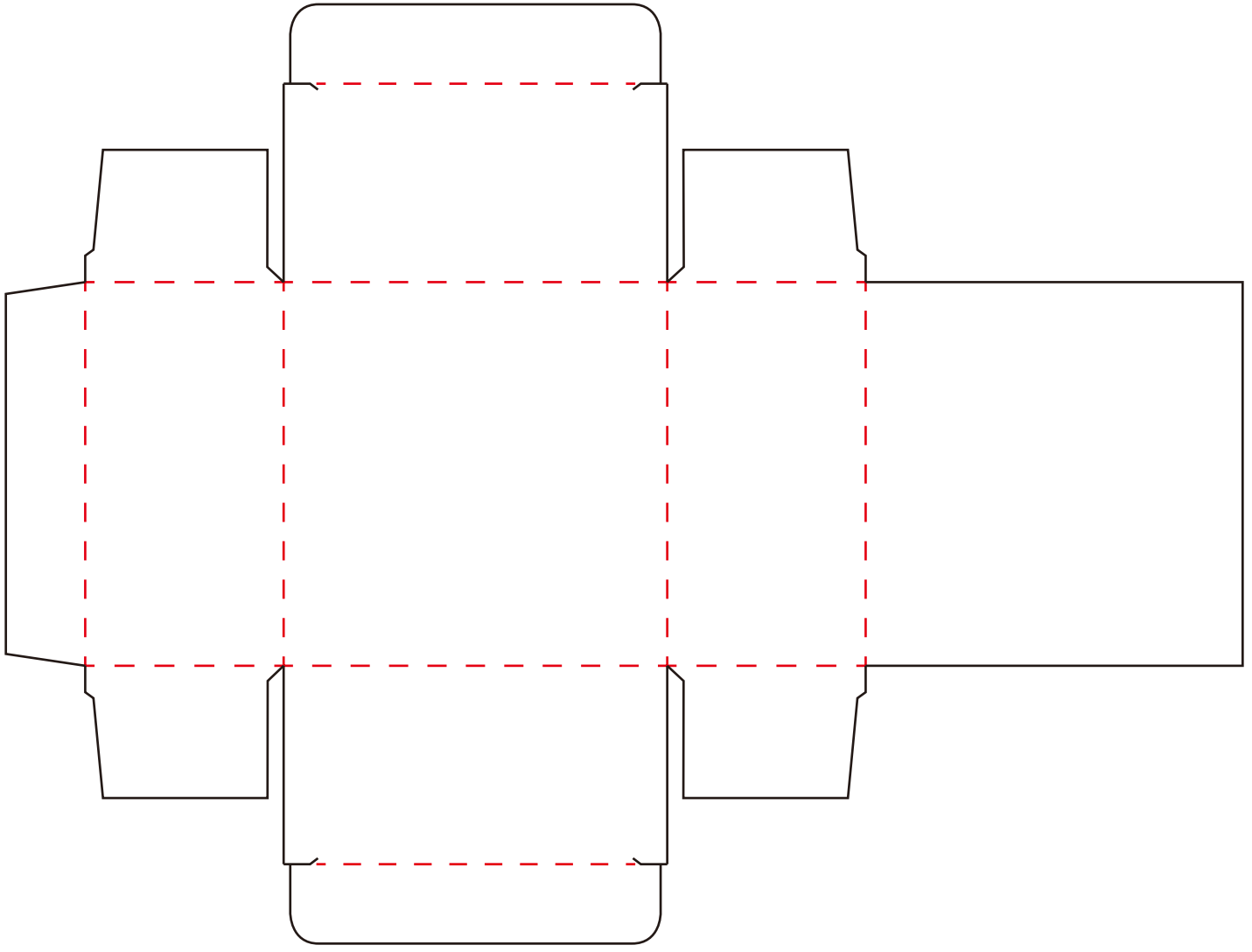

Logo
Brand
Name

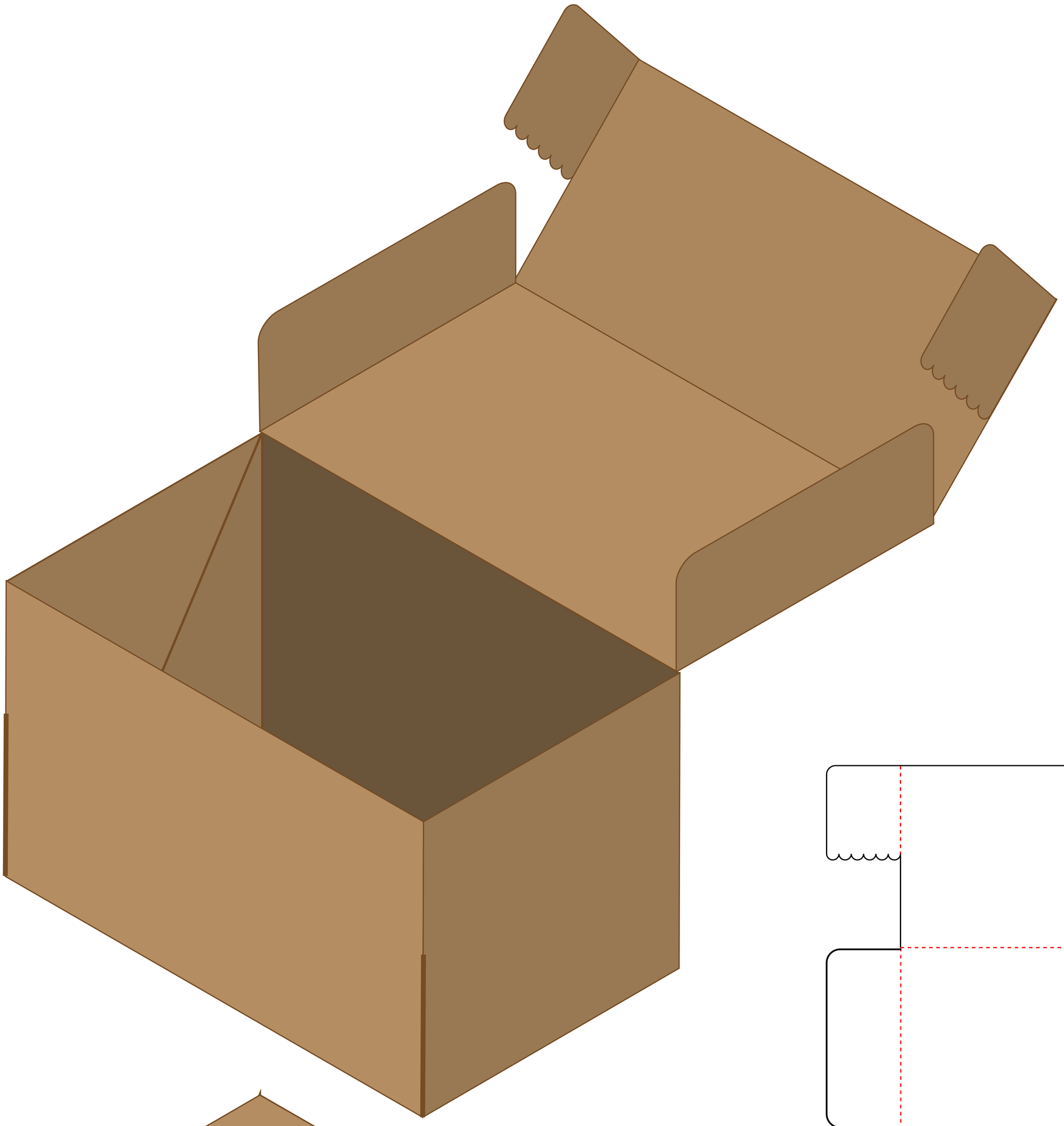

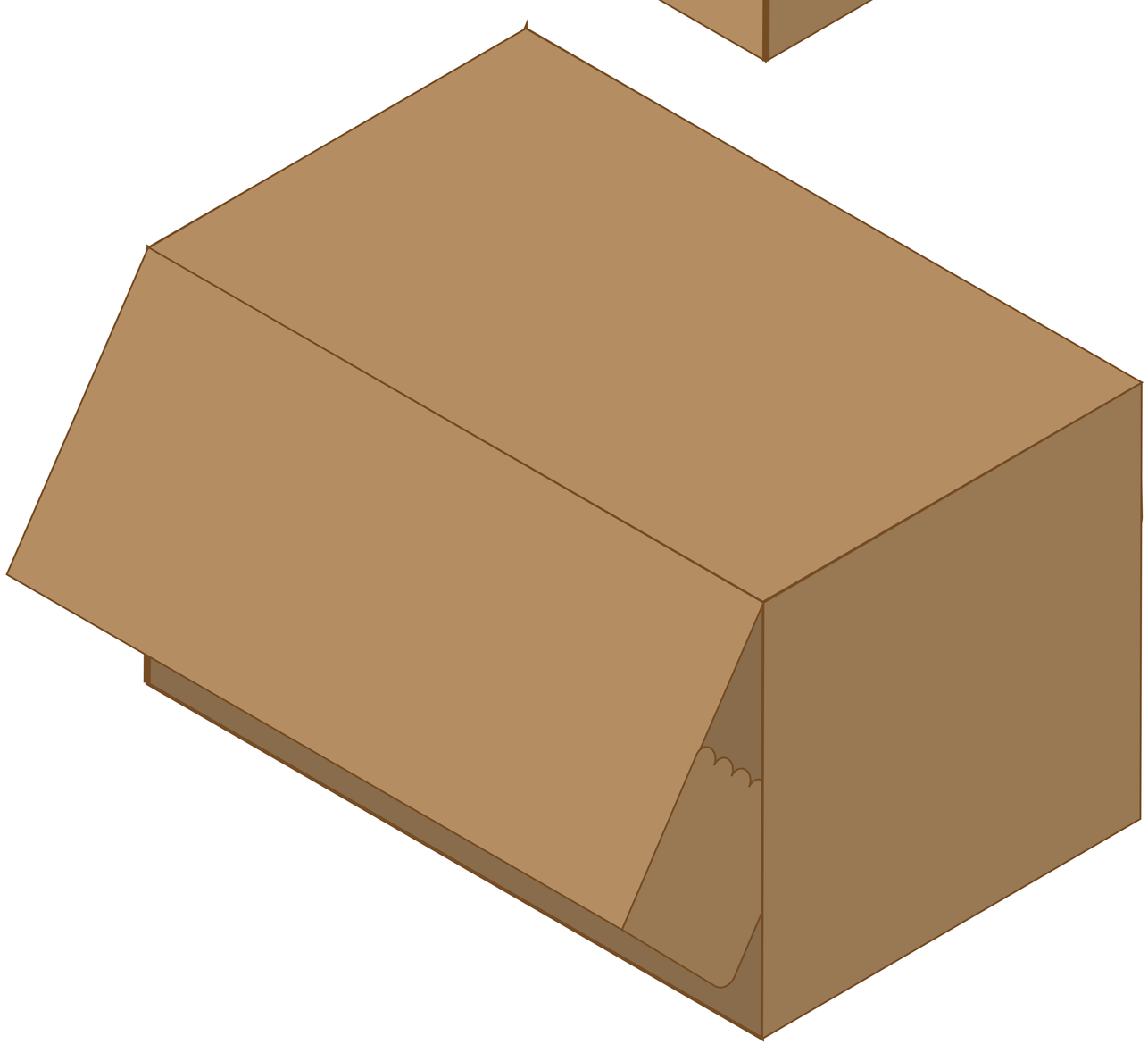

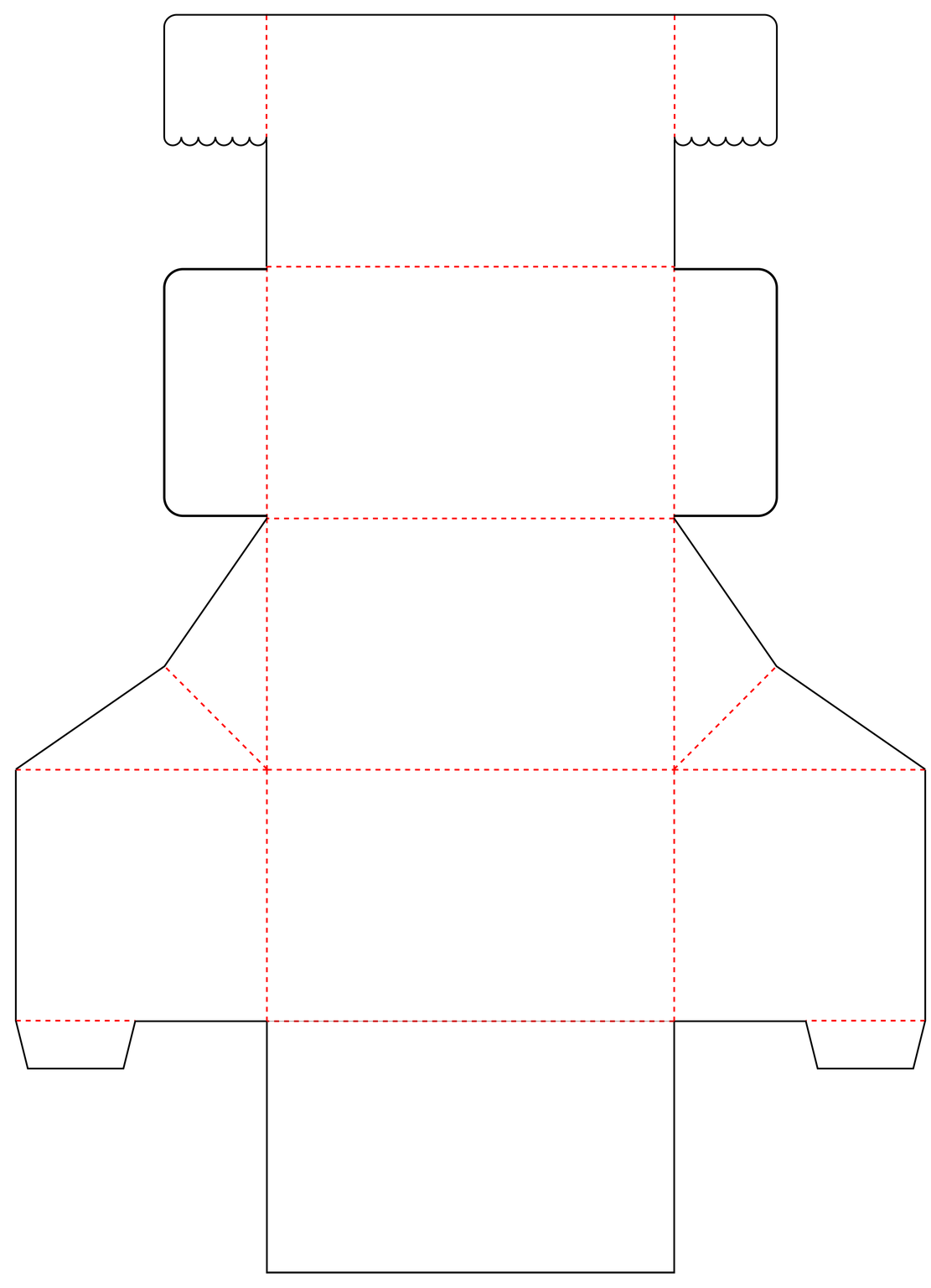

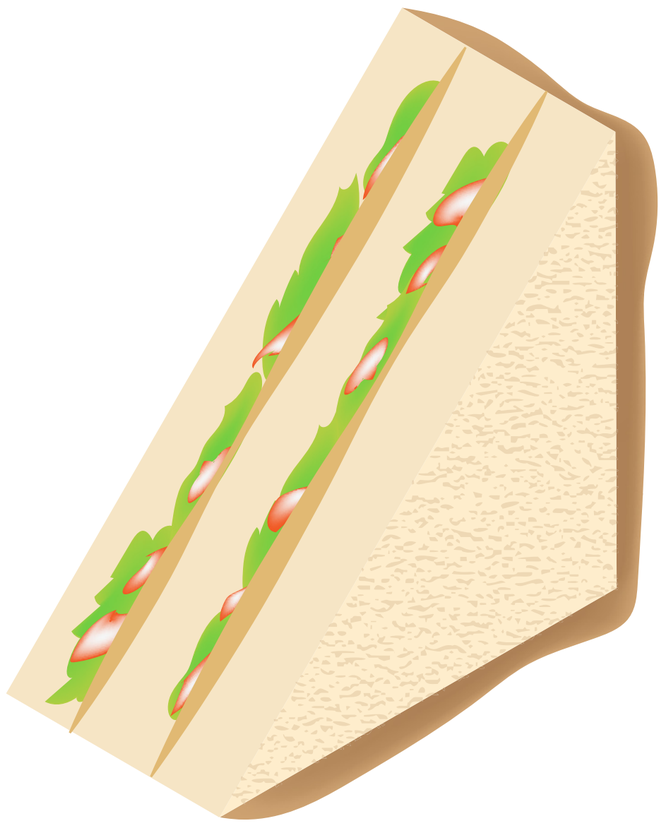

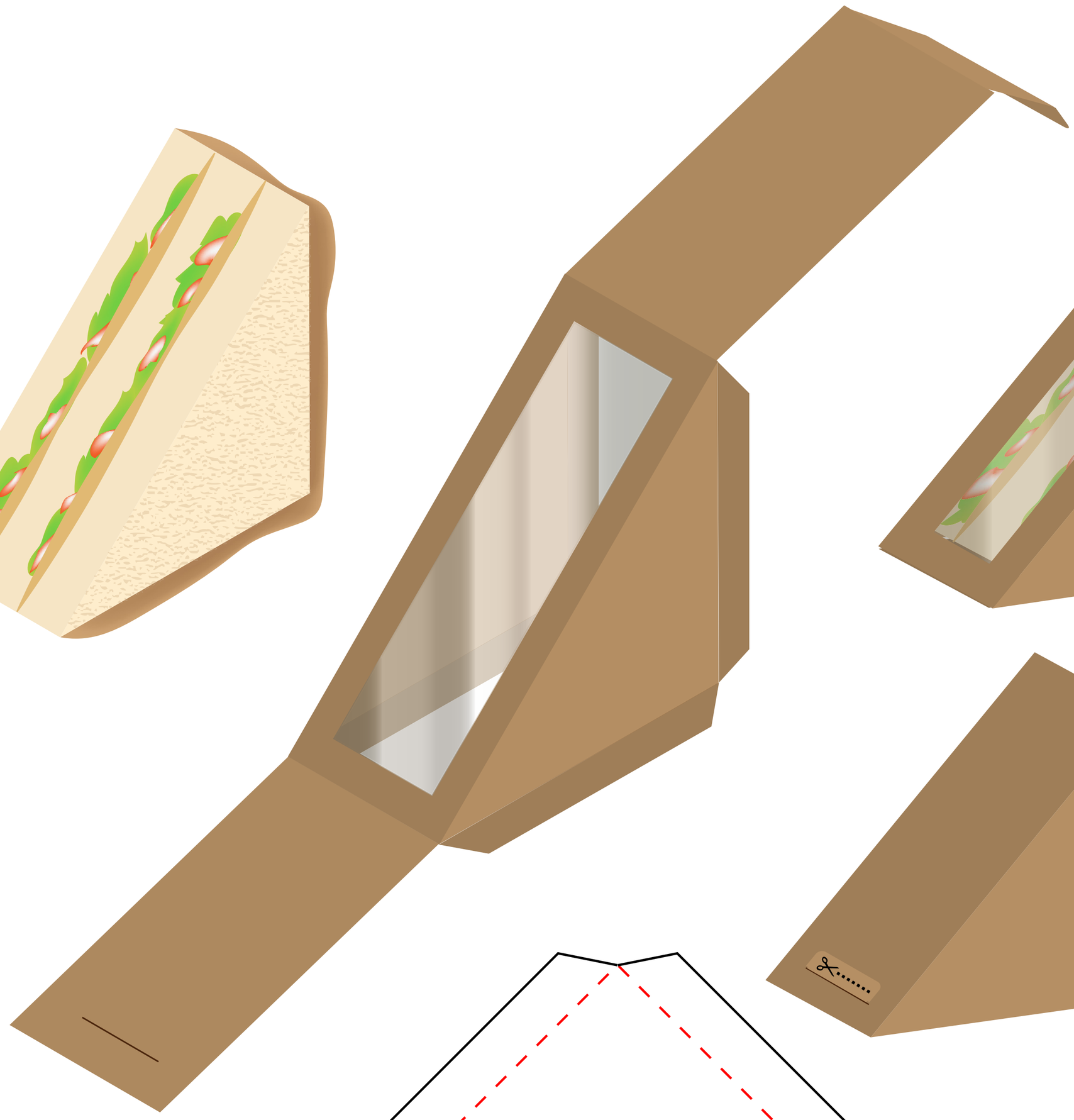

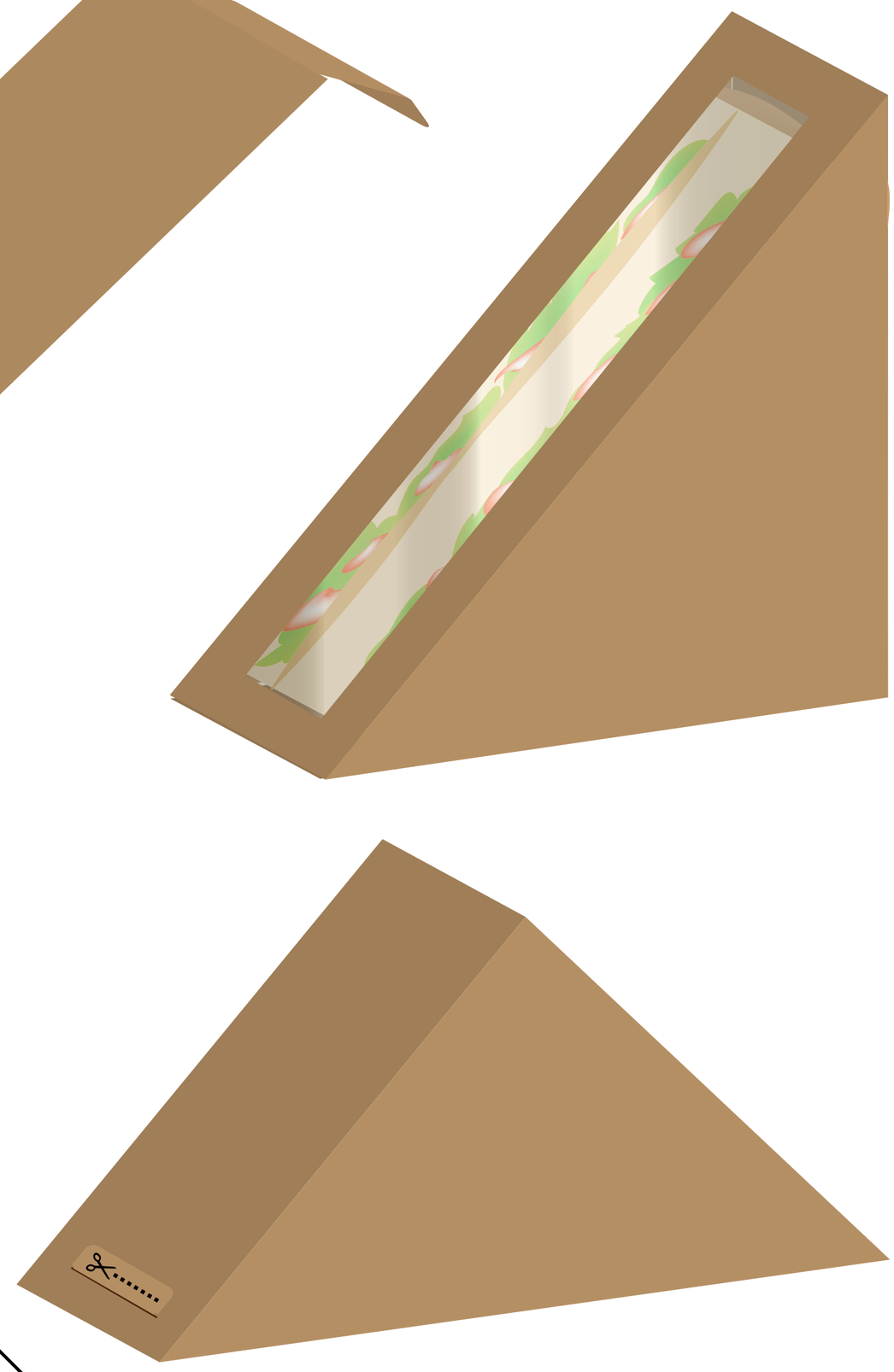

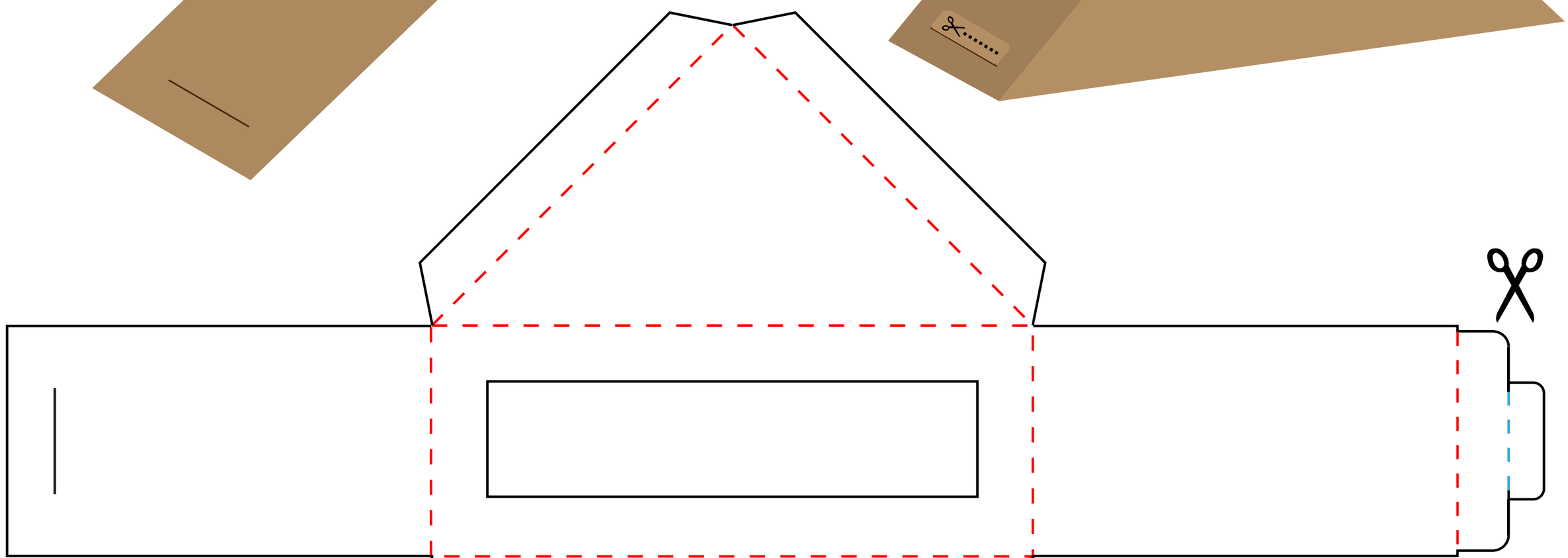

Hard Paper
200-350 gsm.
Sandwich Box

Transparent Plastic Sheet 150 Micron

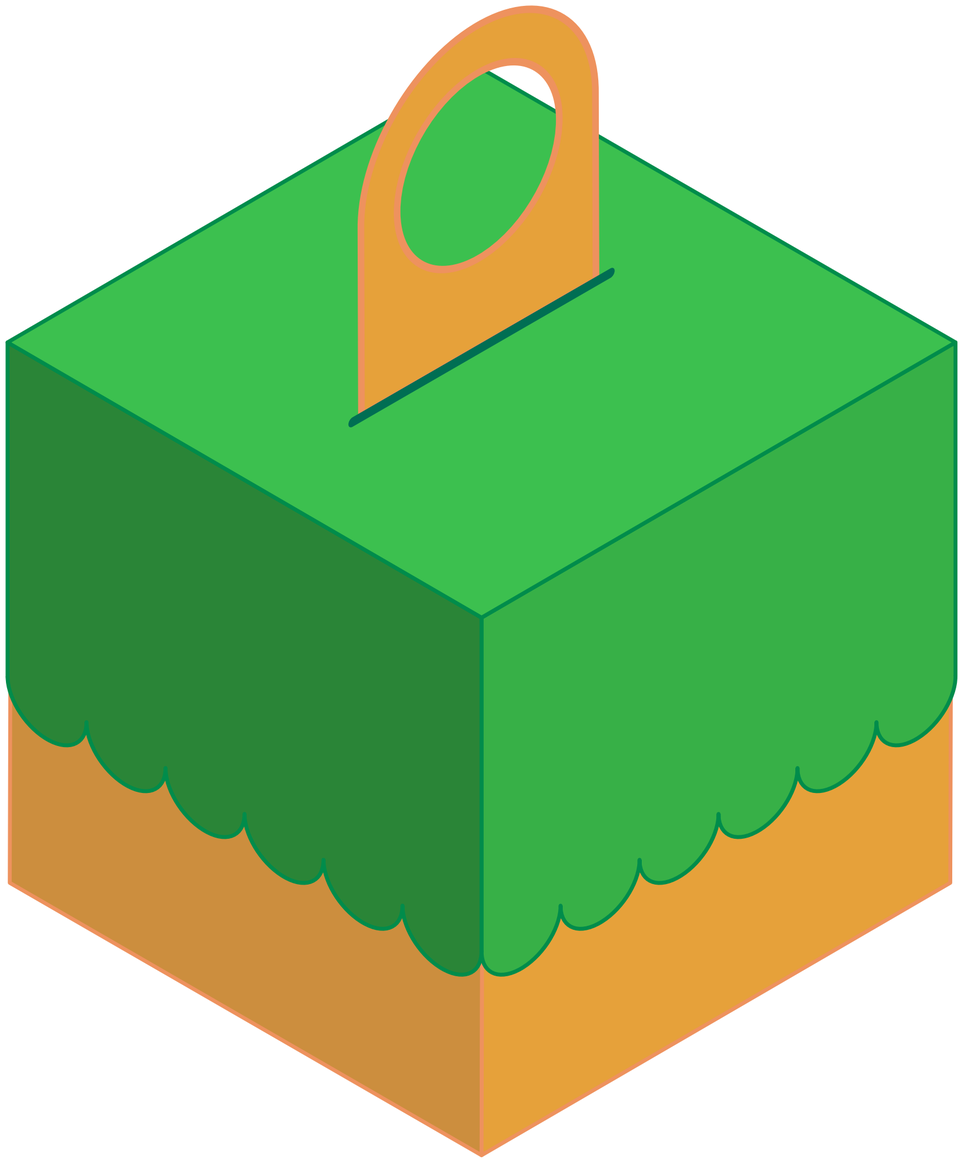

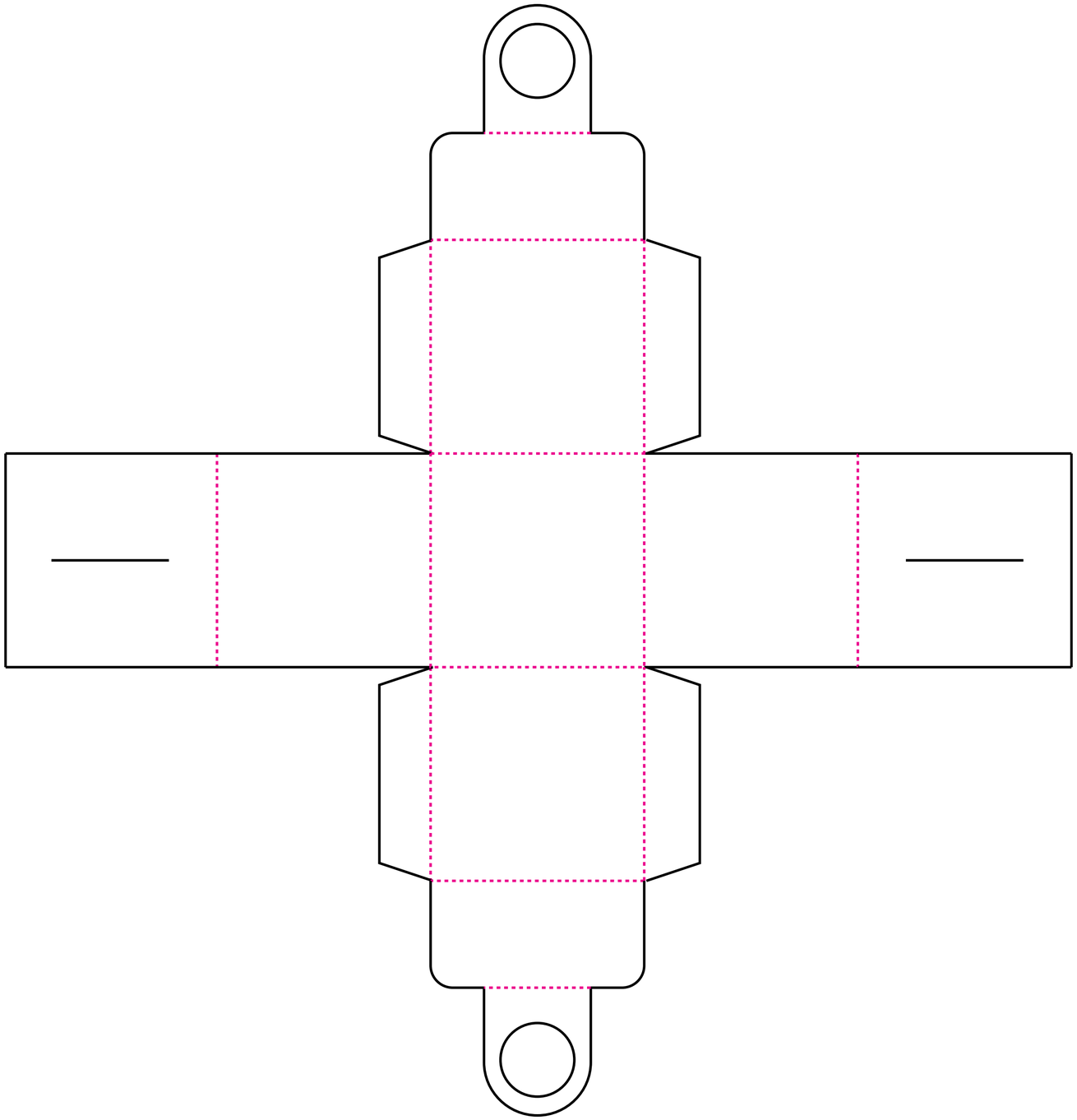

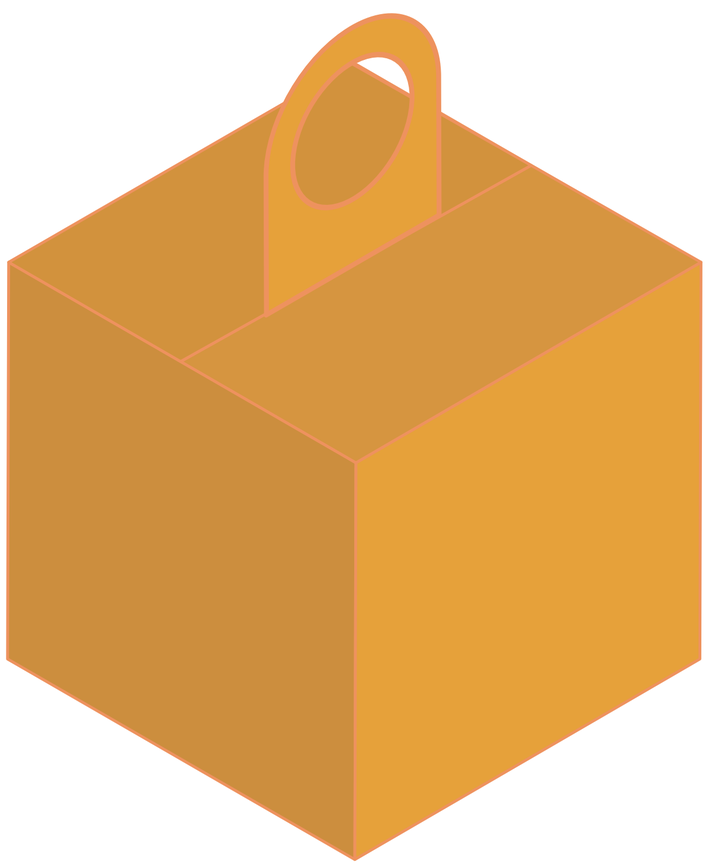

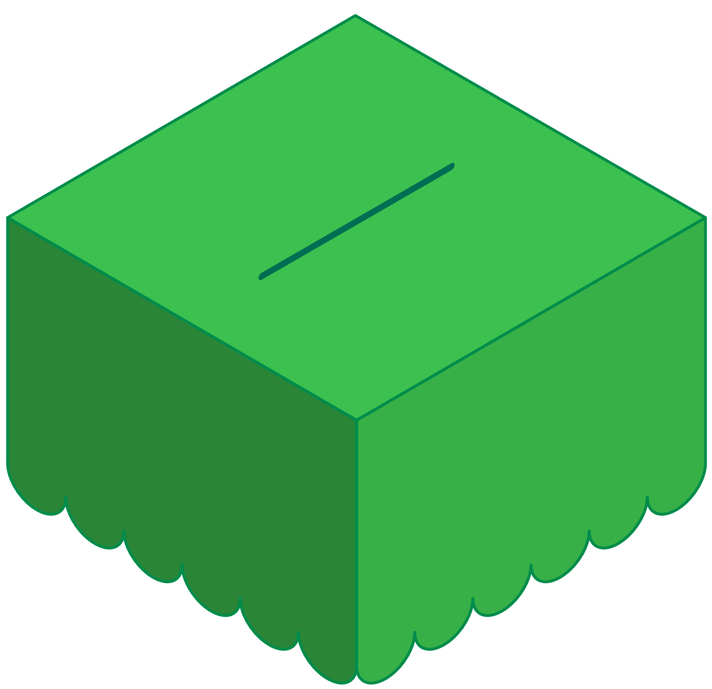

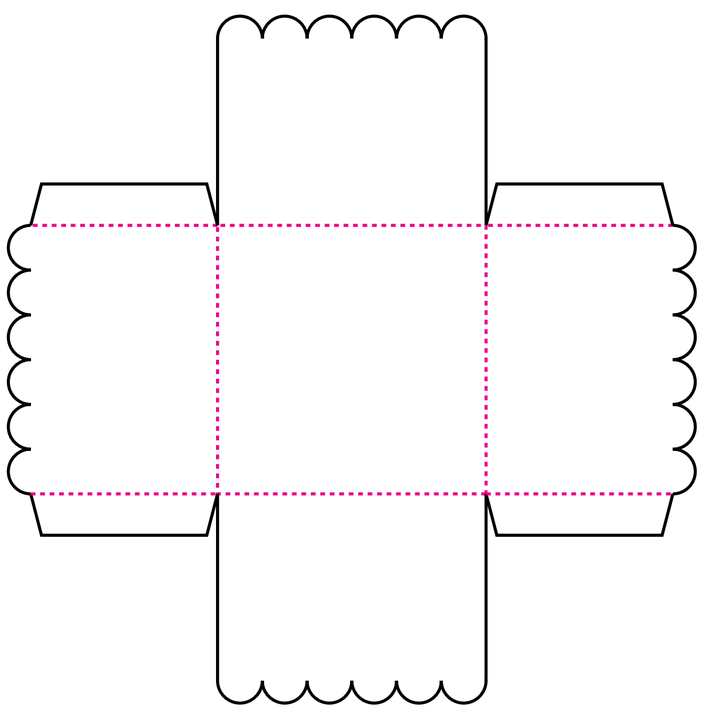

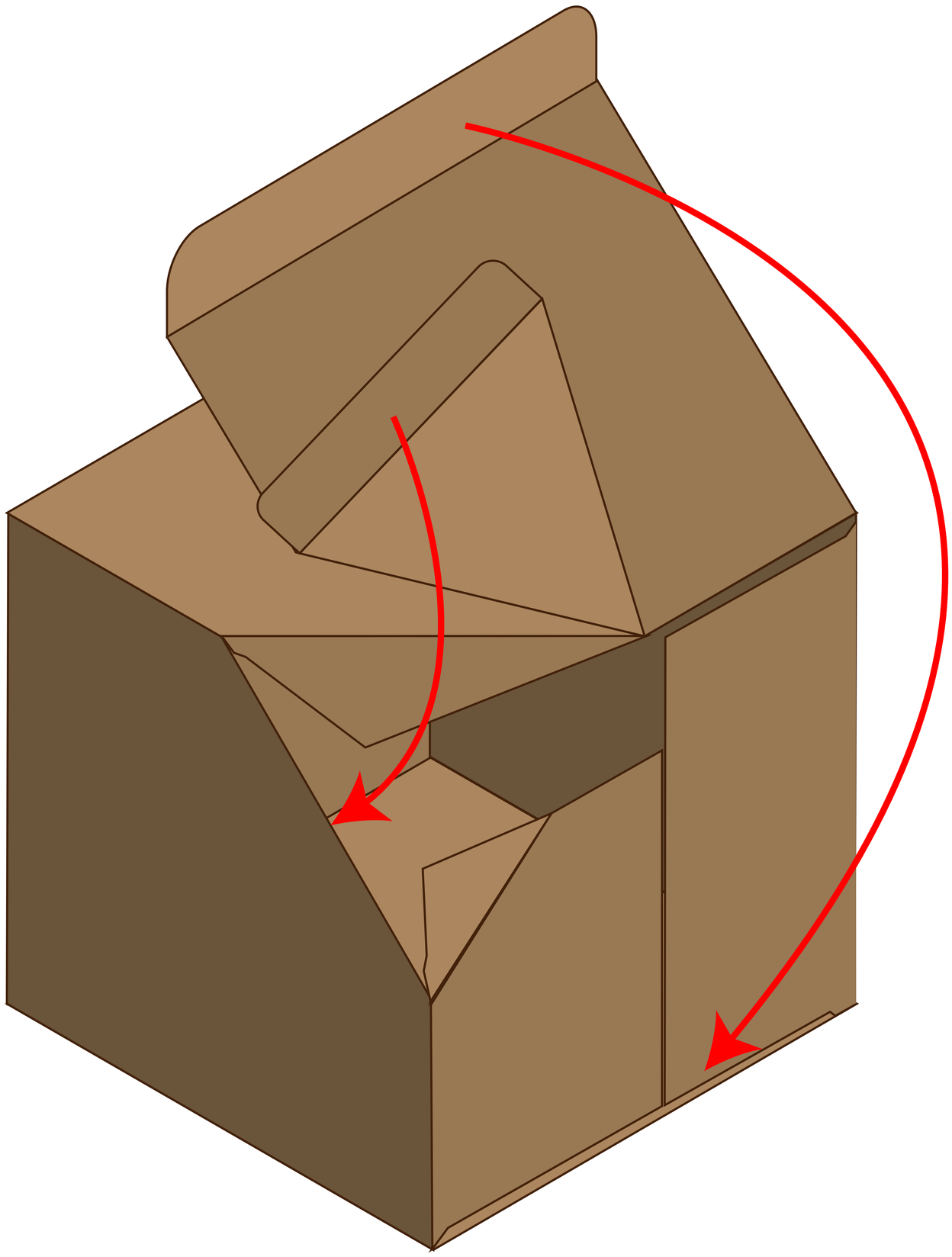

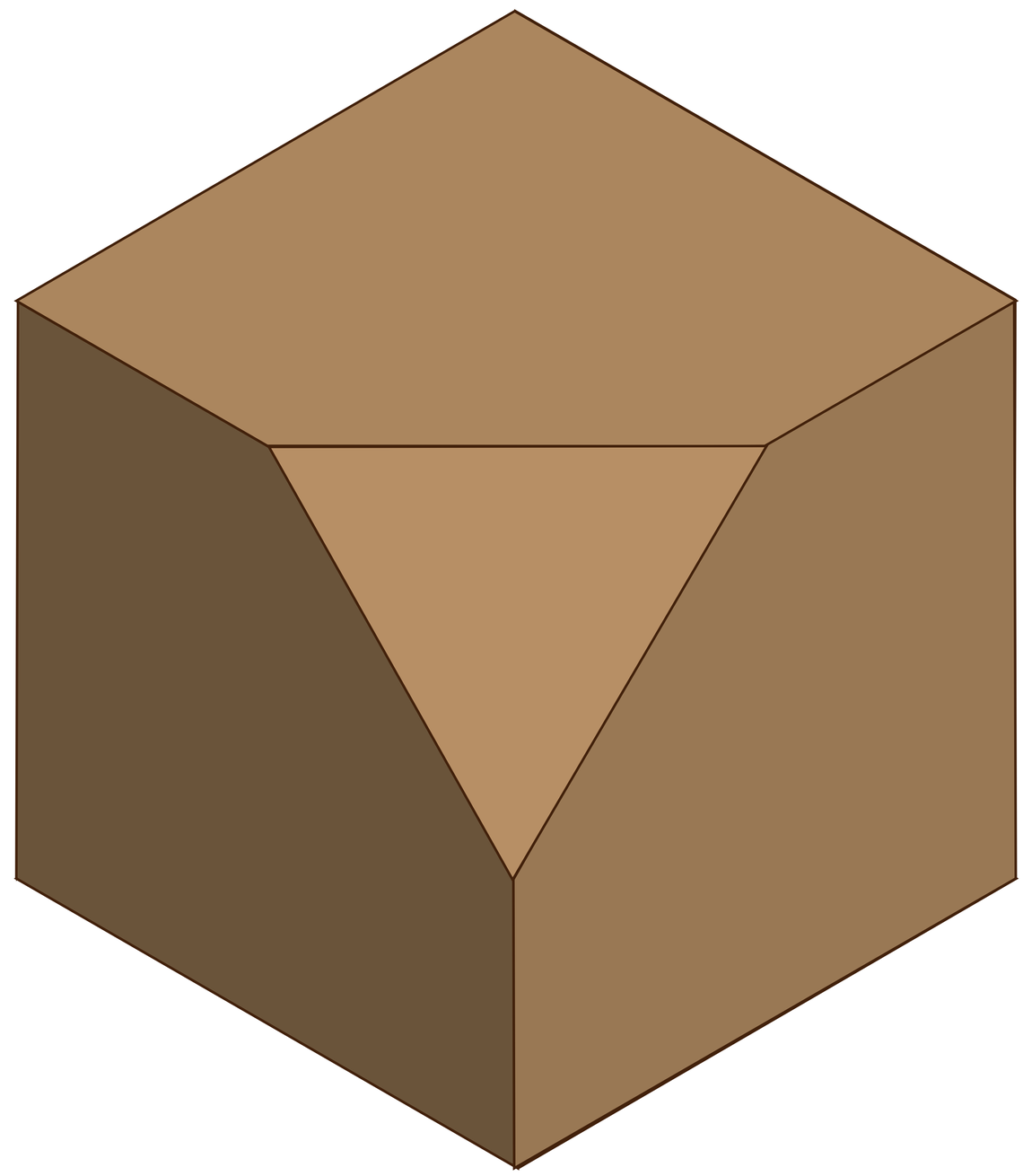

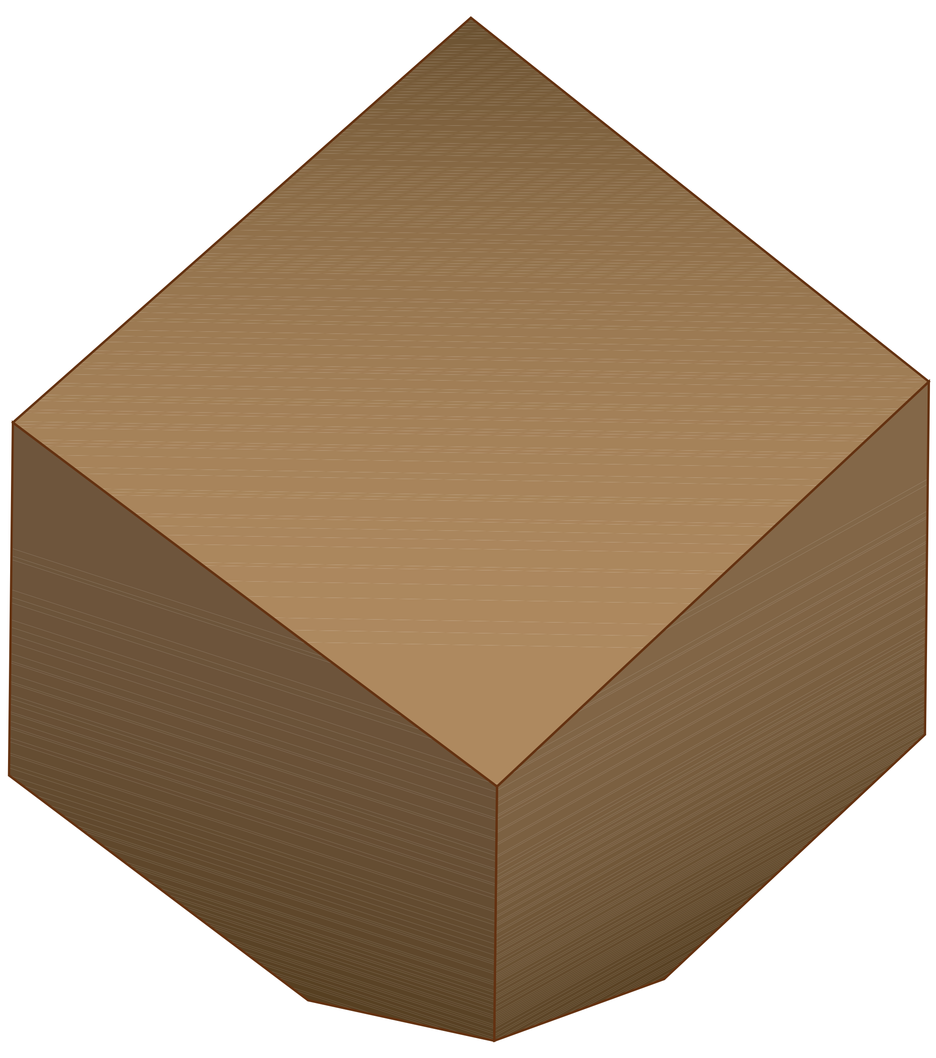

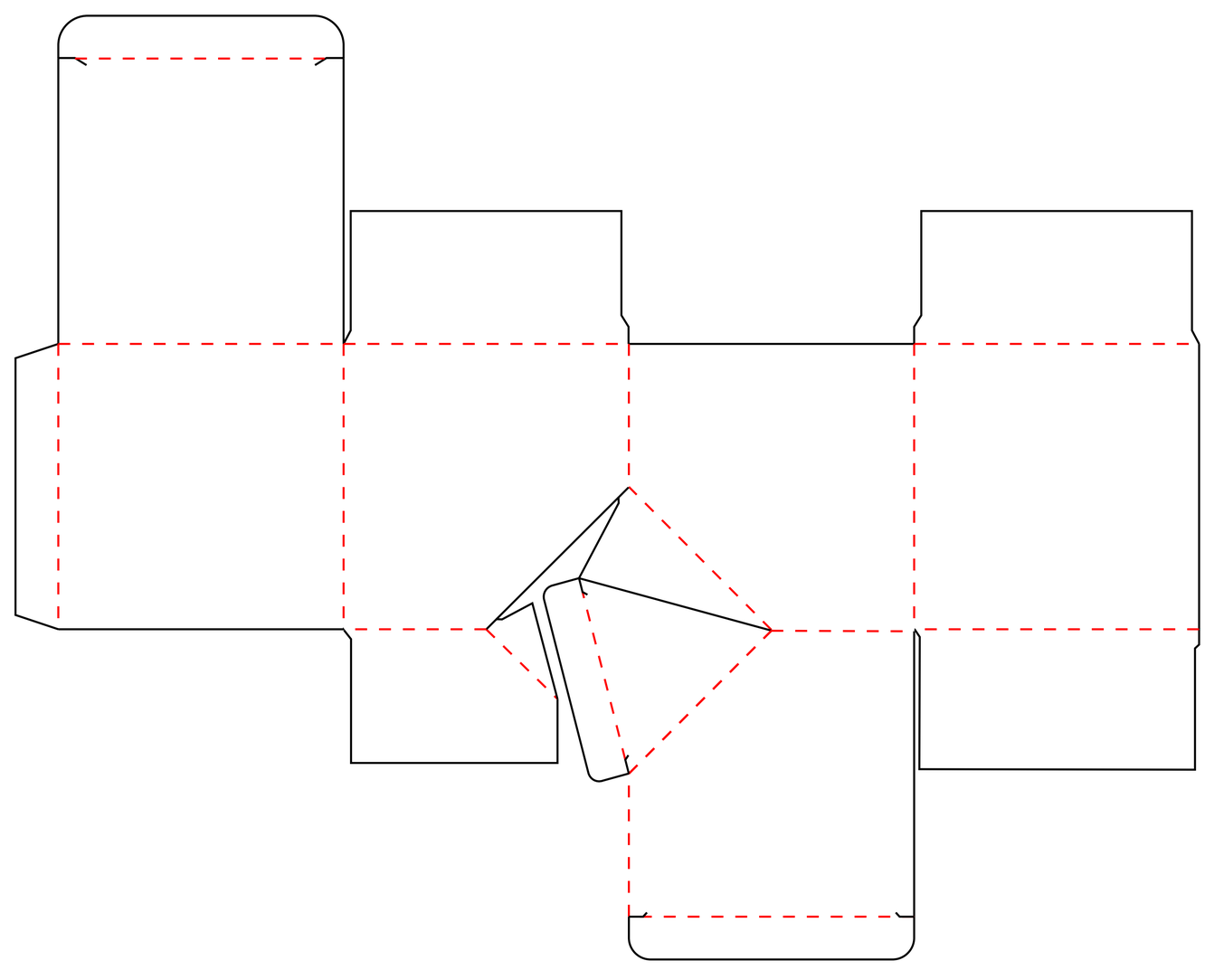

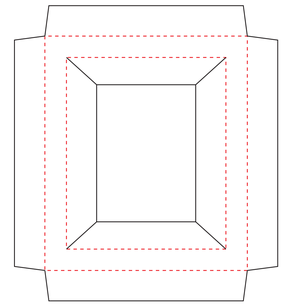

Hard Paper
300-350 gsm.
Product Support

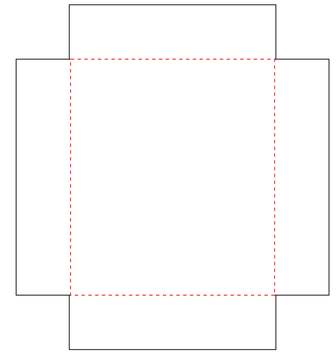

Hard Board Paper
Thick 0.16 cm
Bottom Box

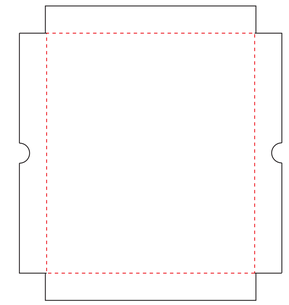

Hard Board Paper
Thick 0.16 cm
Top Box

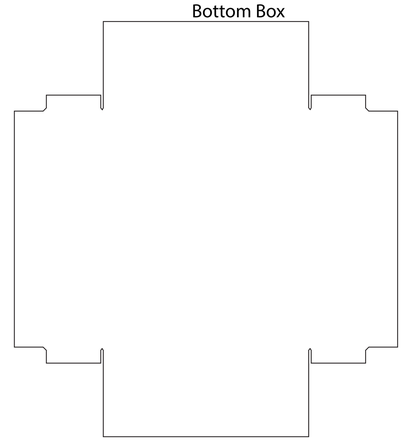

Wrapping Paper
Bottom Box

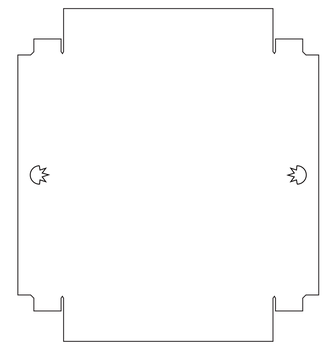

Wrapping Paper
Top Box