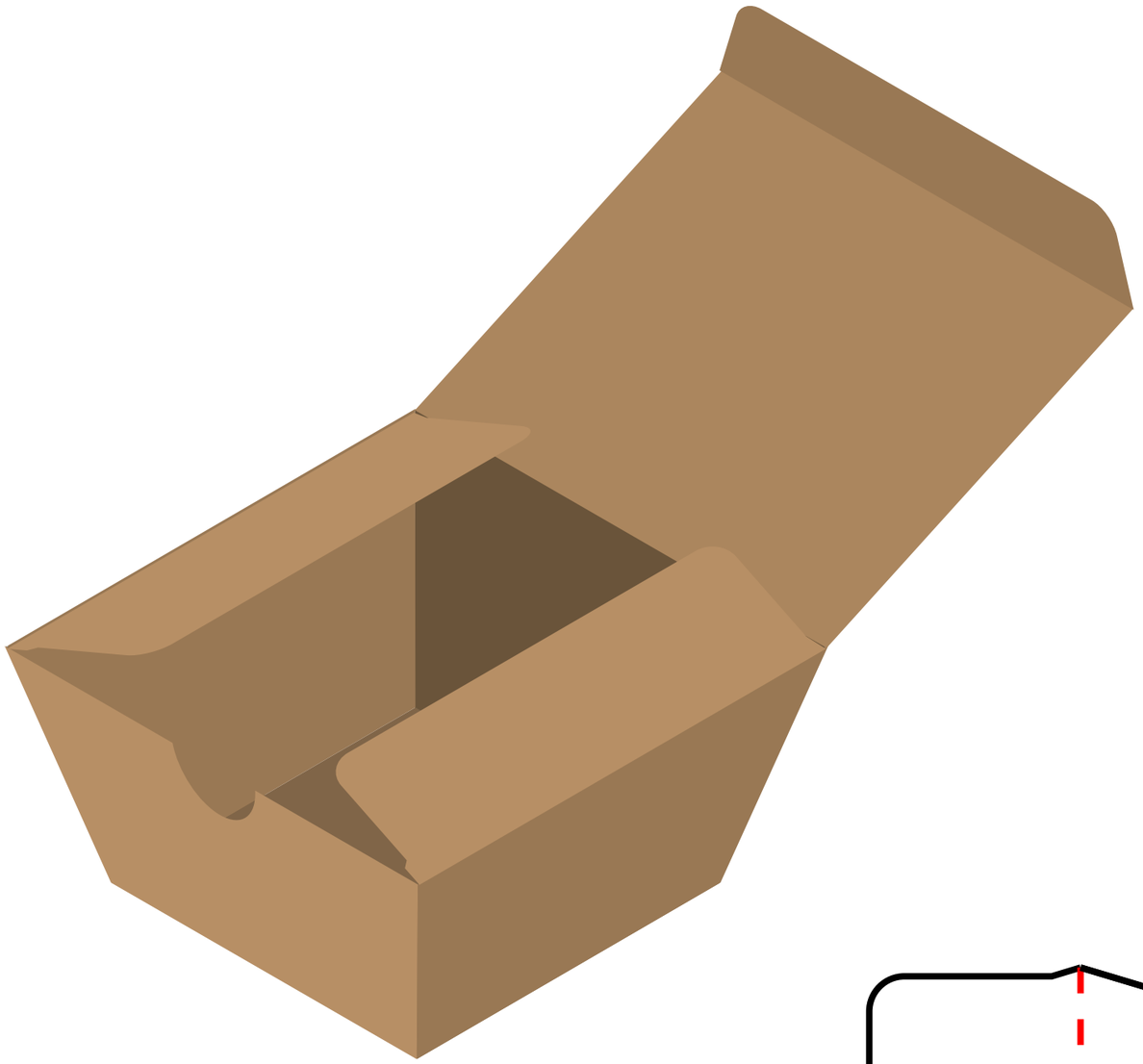

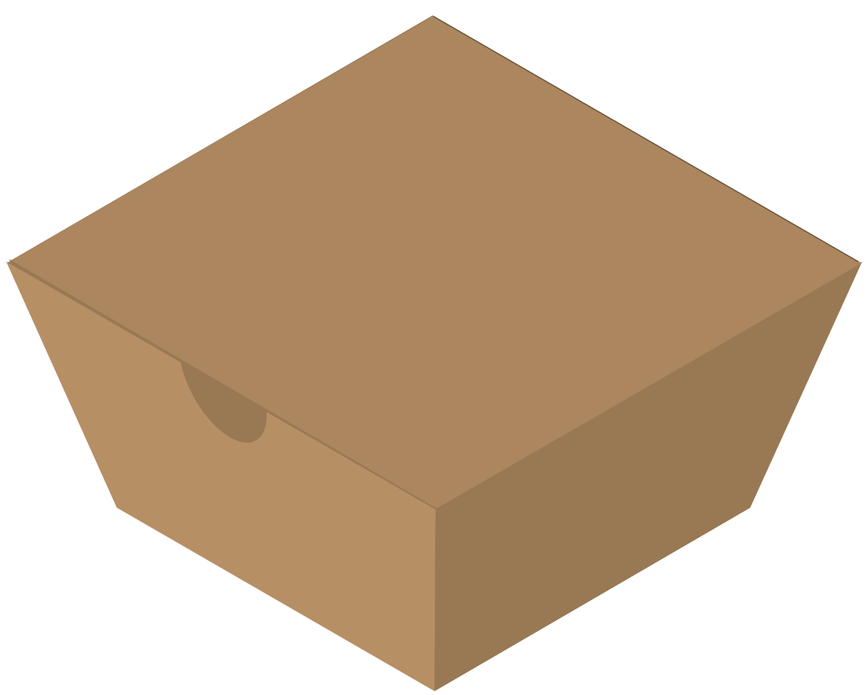

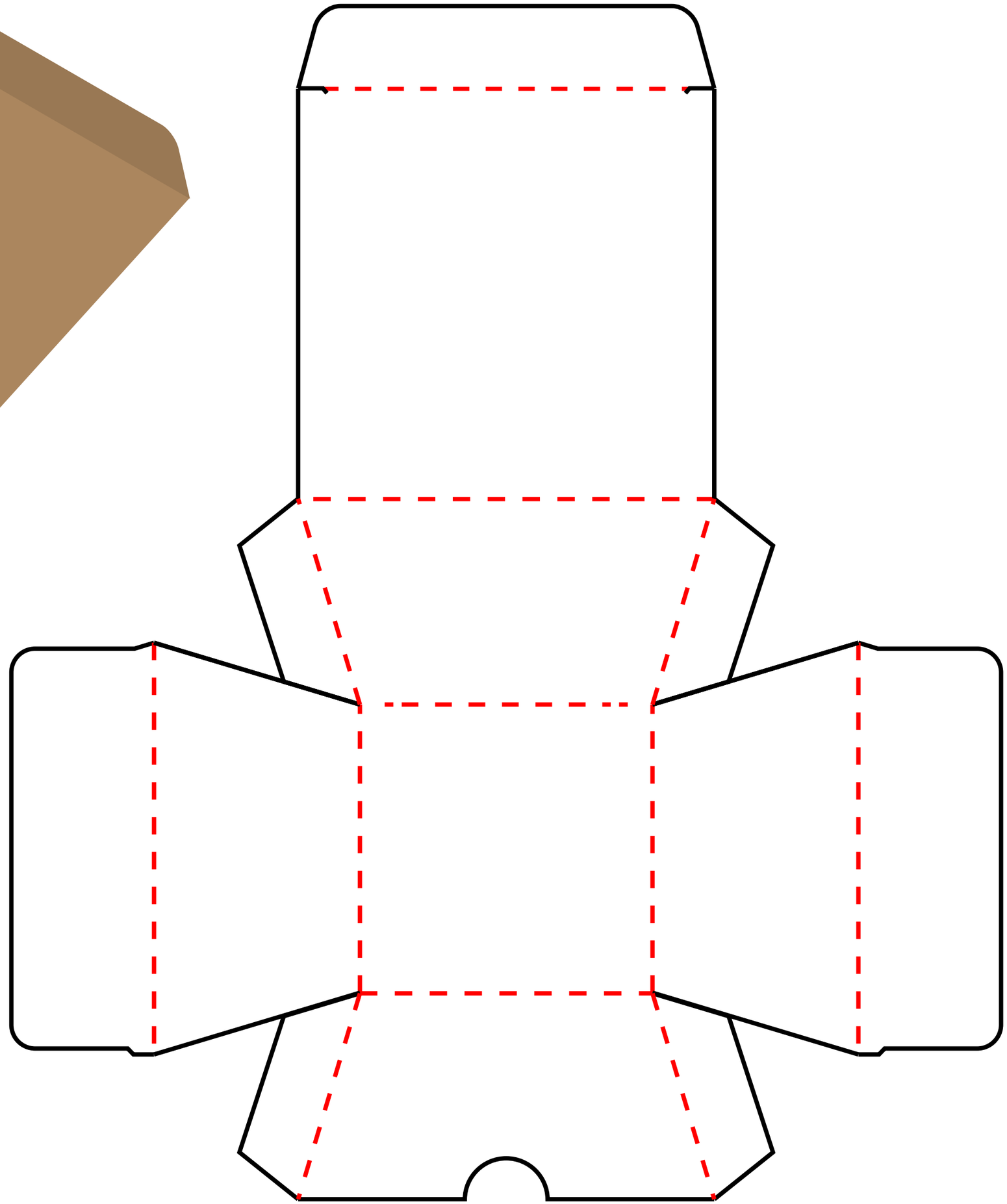

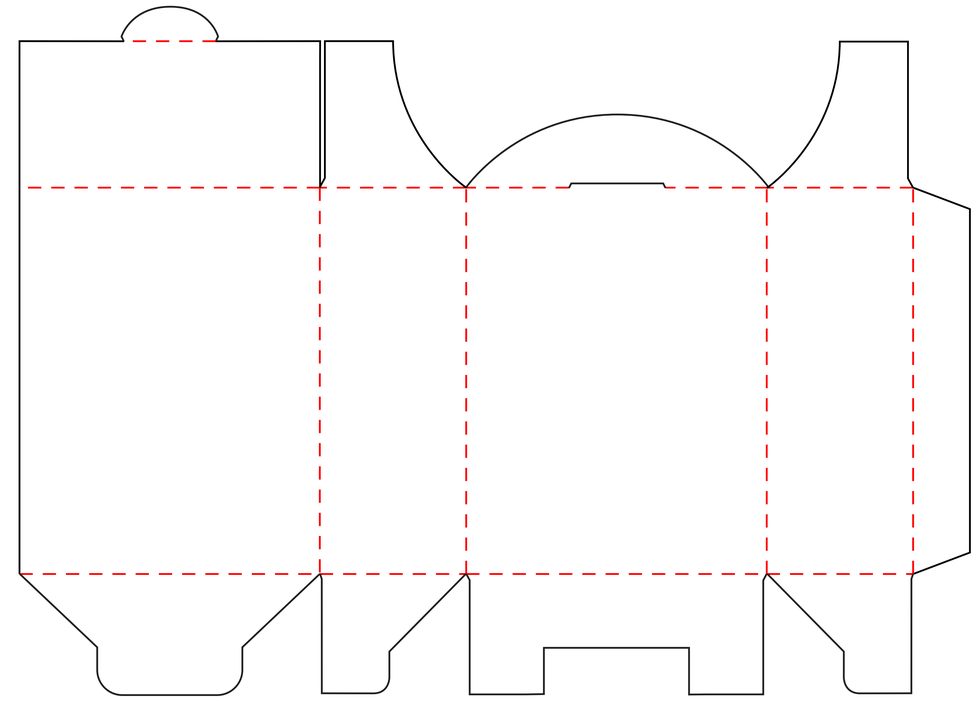

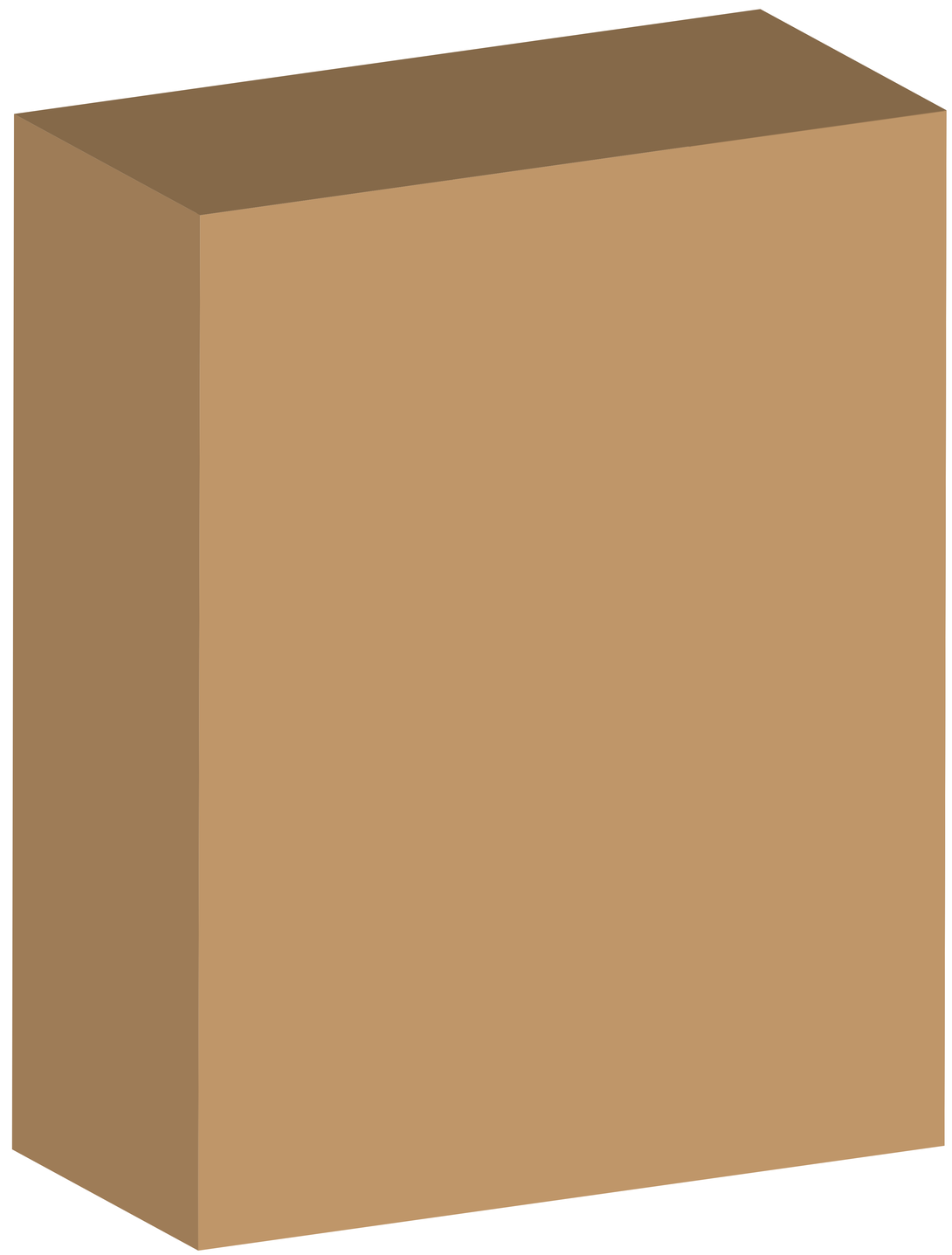

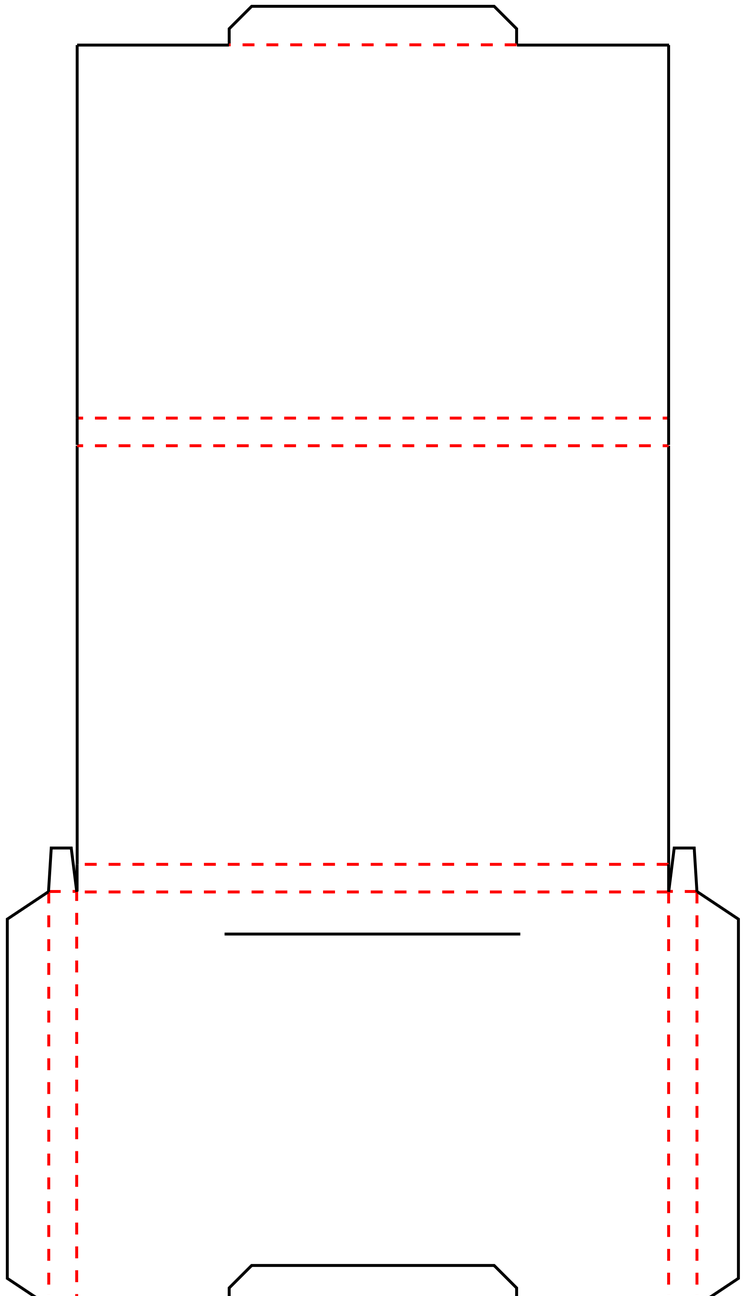

A5 Document Envelope

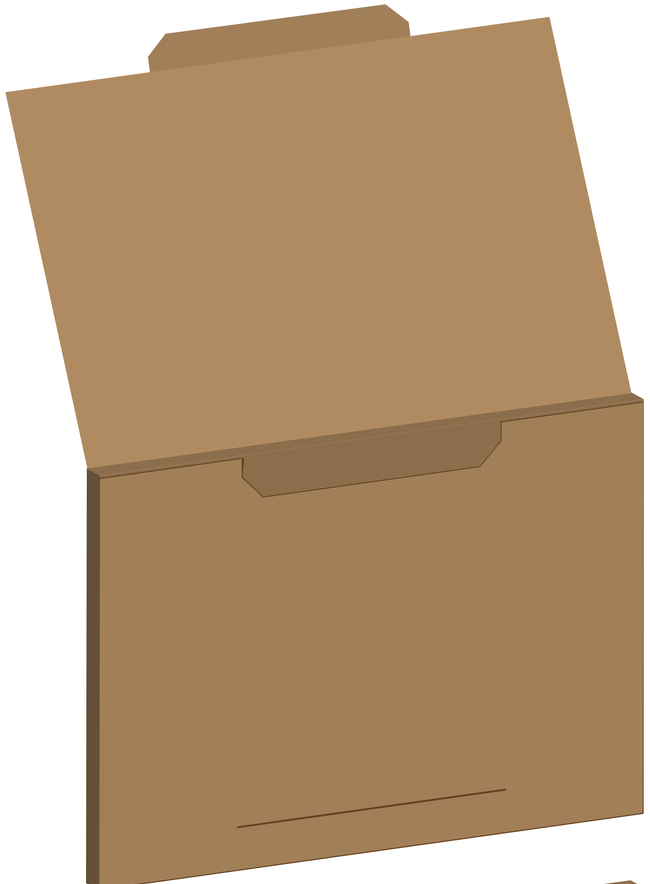

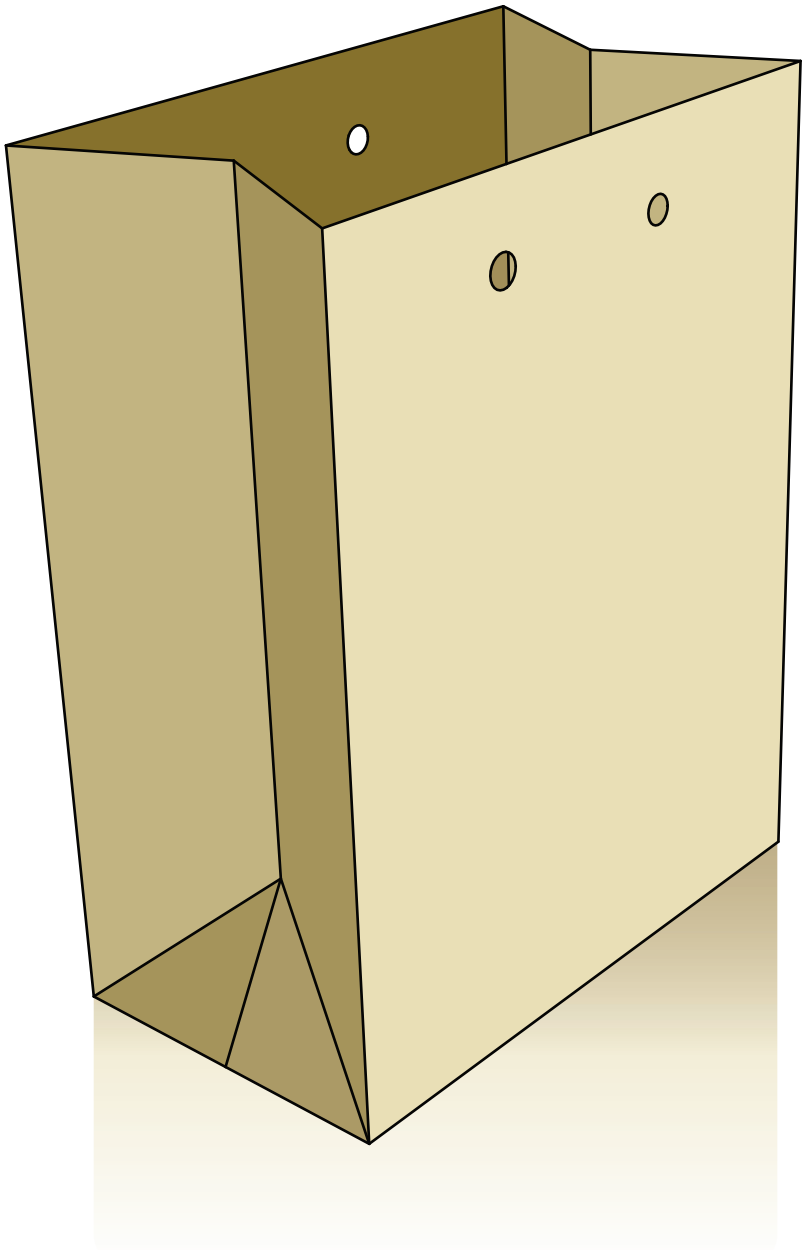

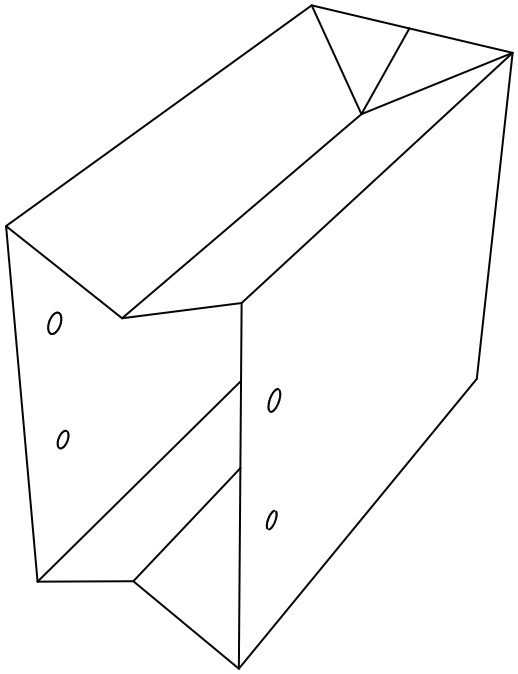

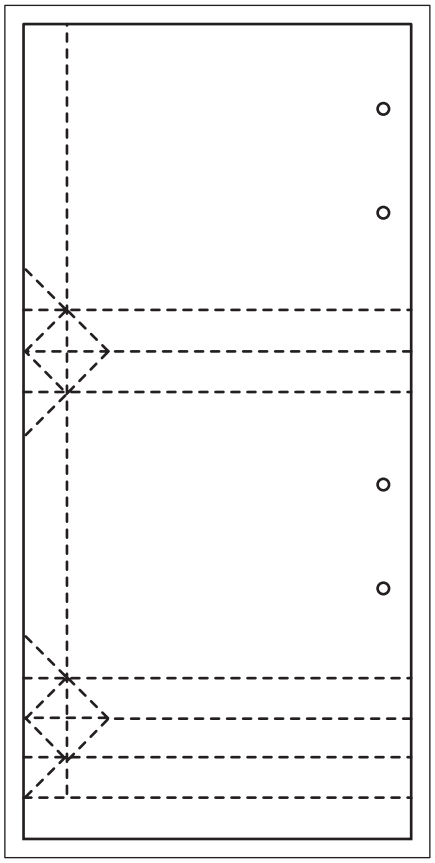

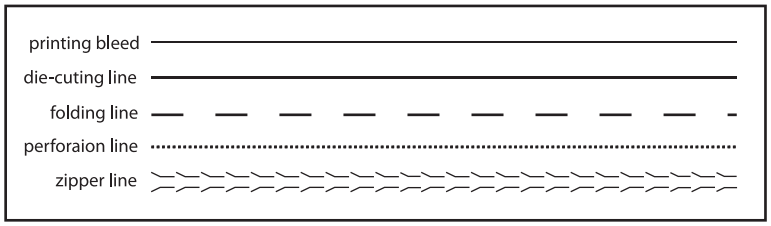
printing bleed
die-cuting line
folding line
perforaion line
zipper line

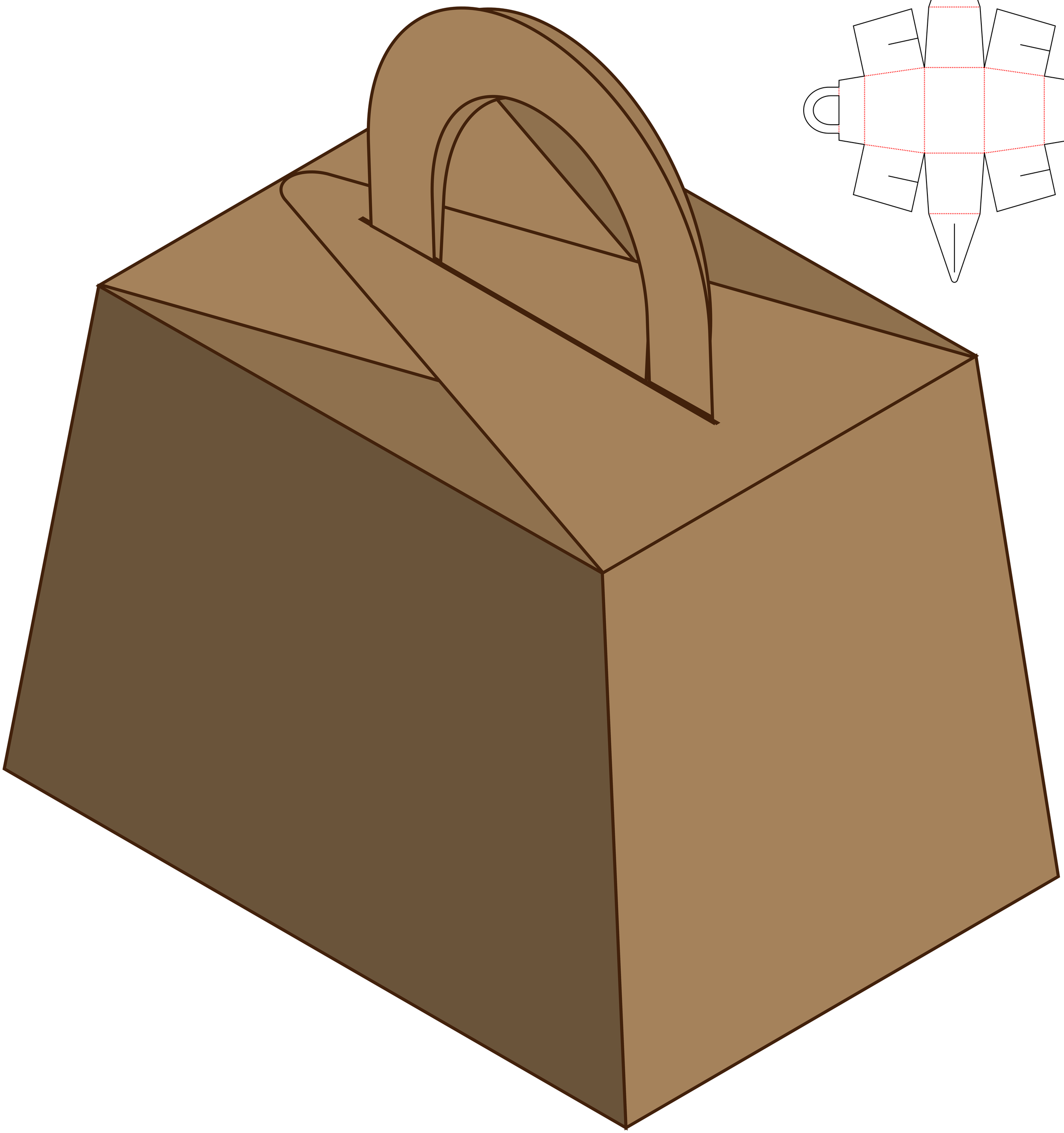

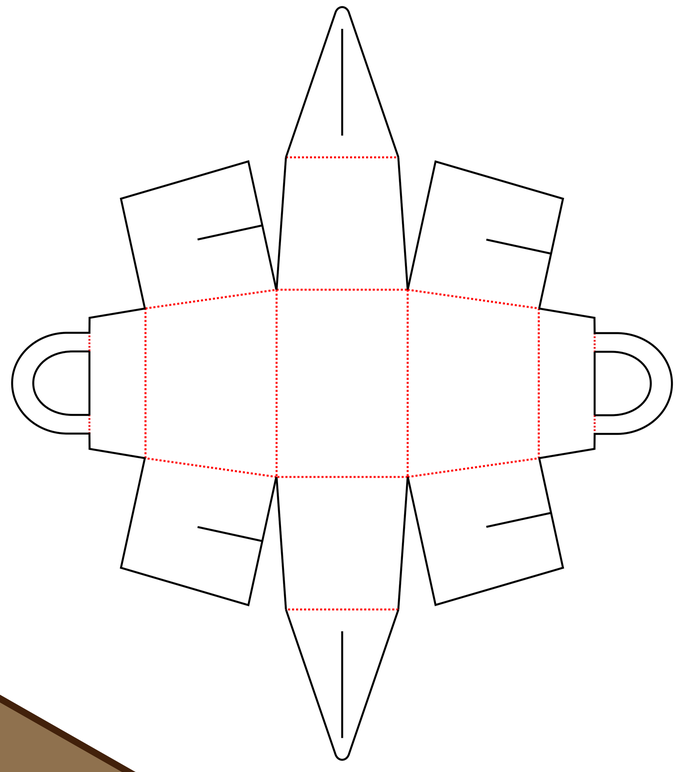

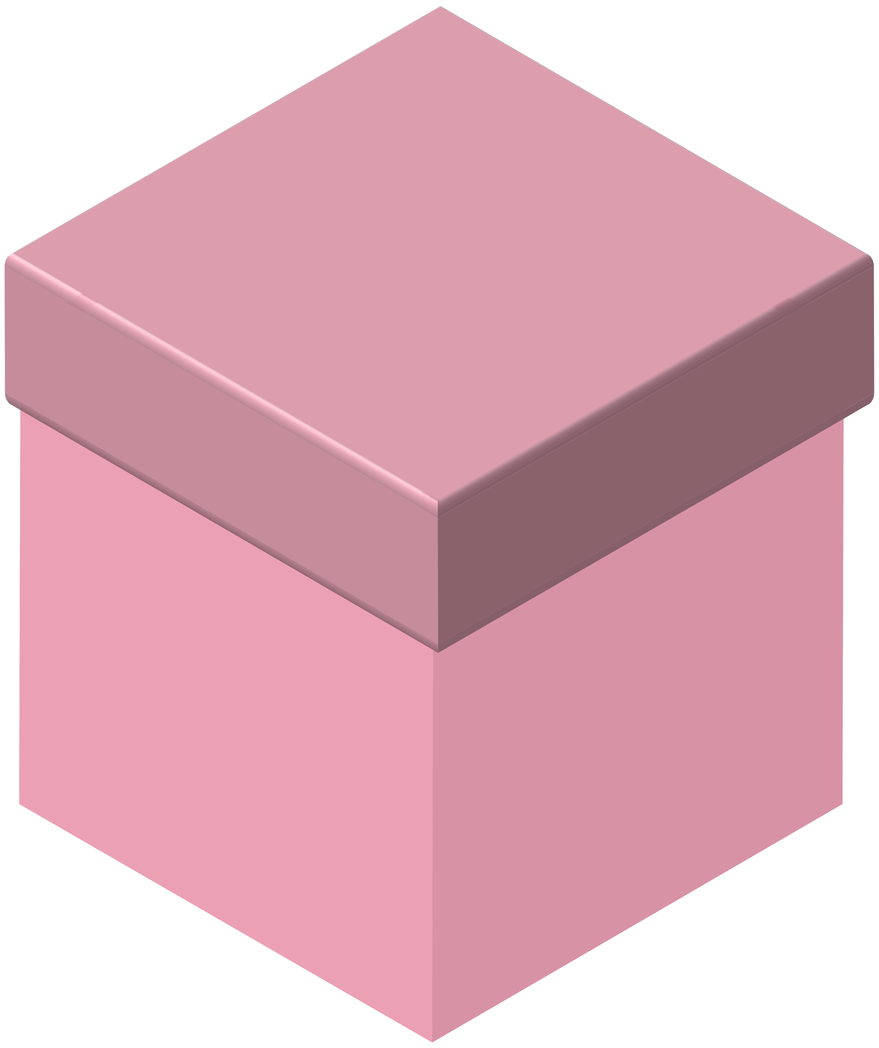

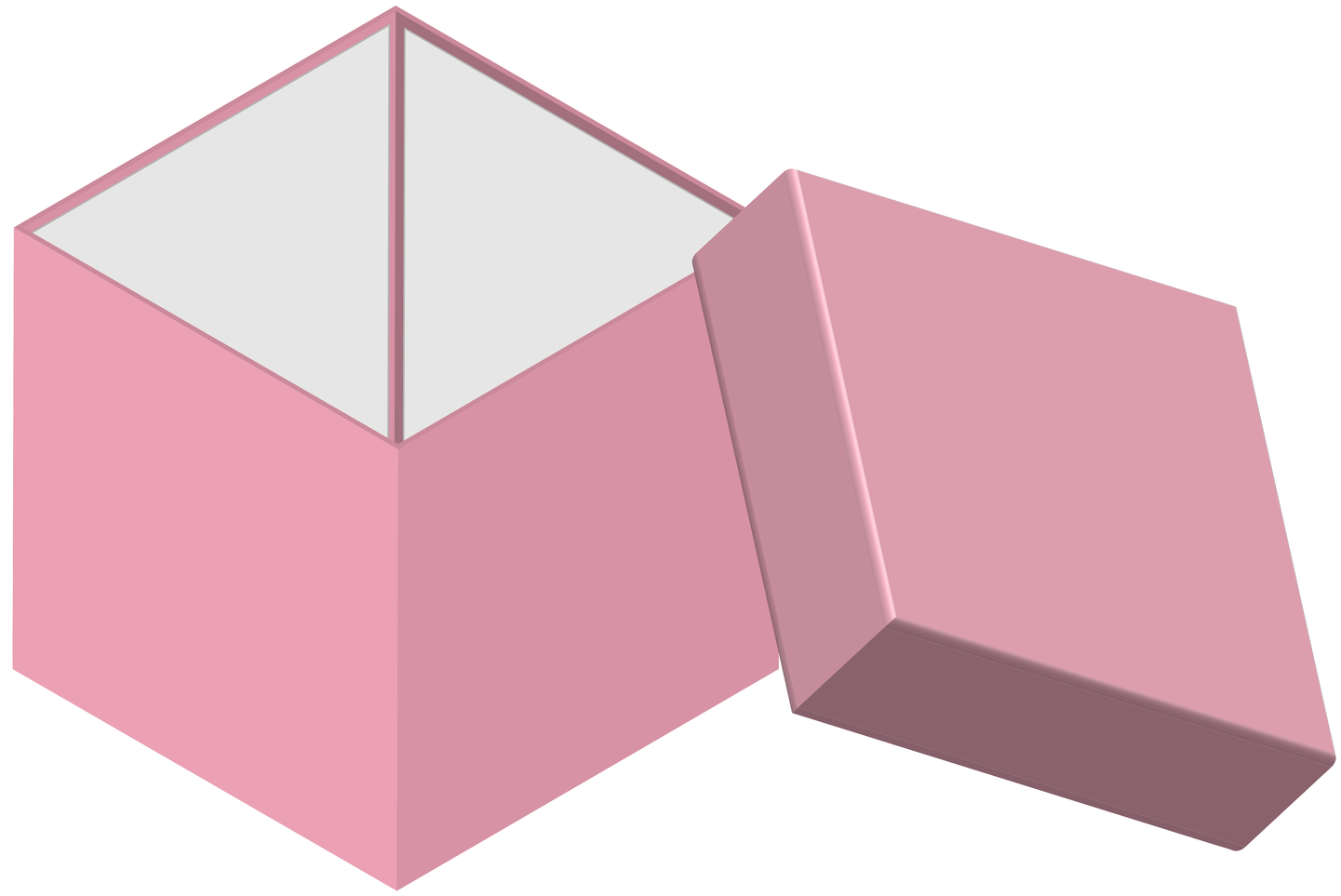

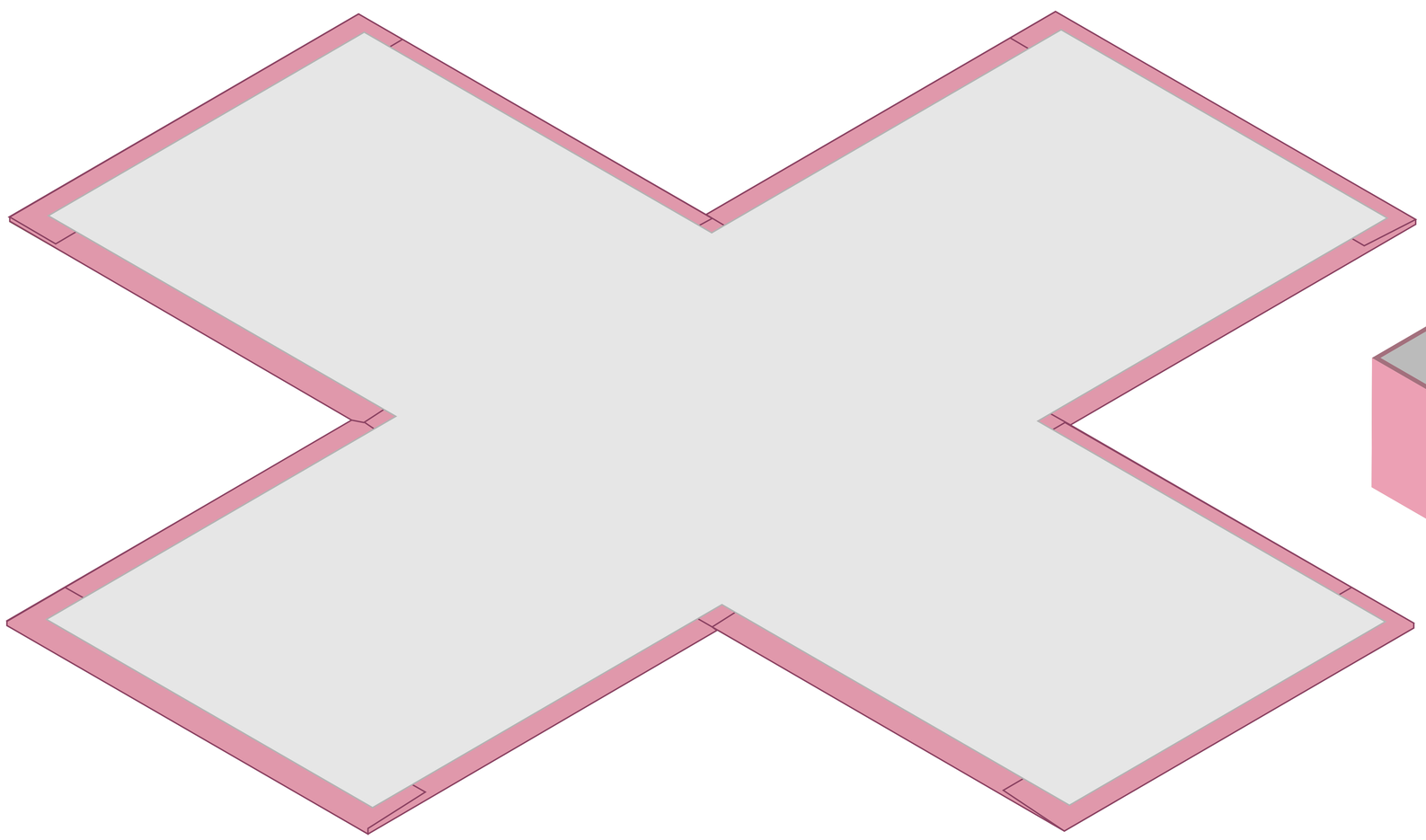

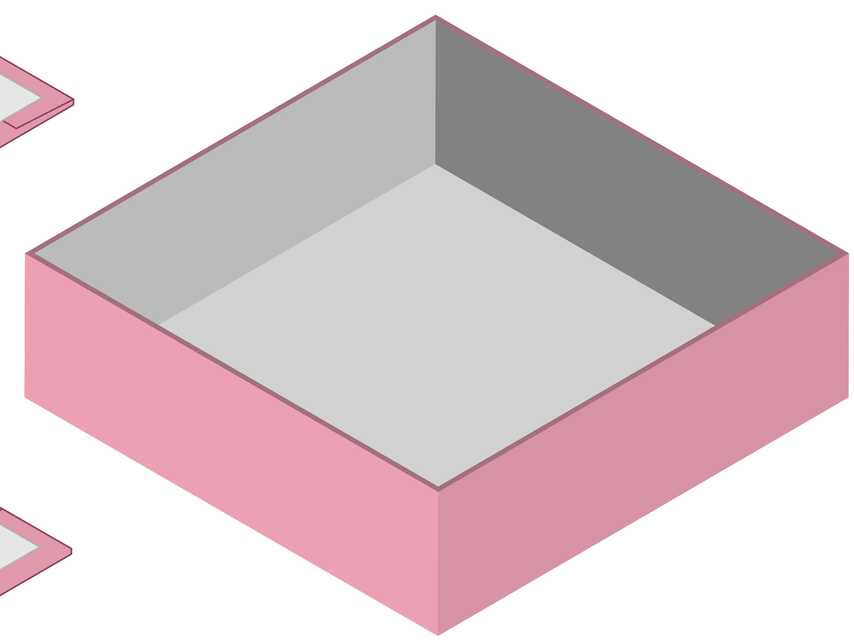

Top Box

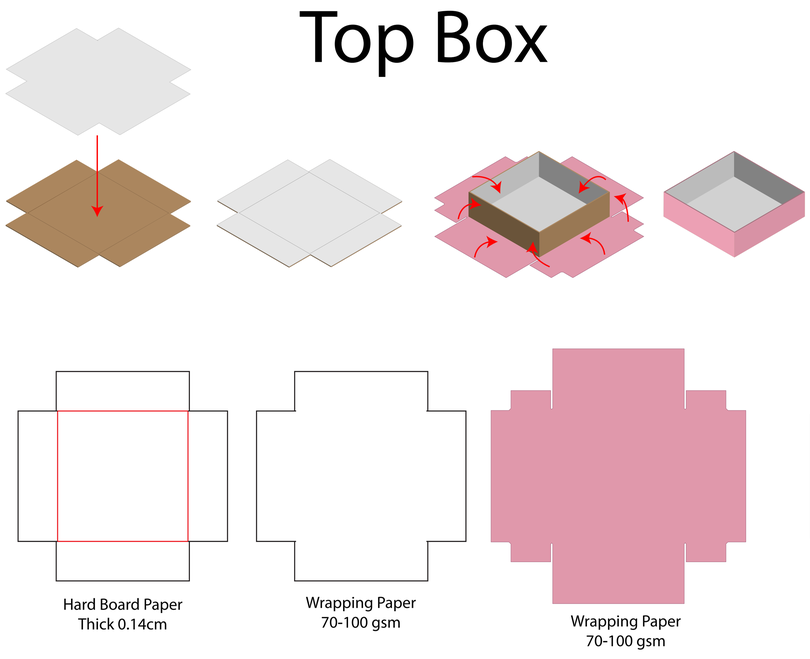

Bottom Box

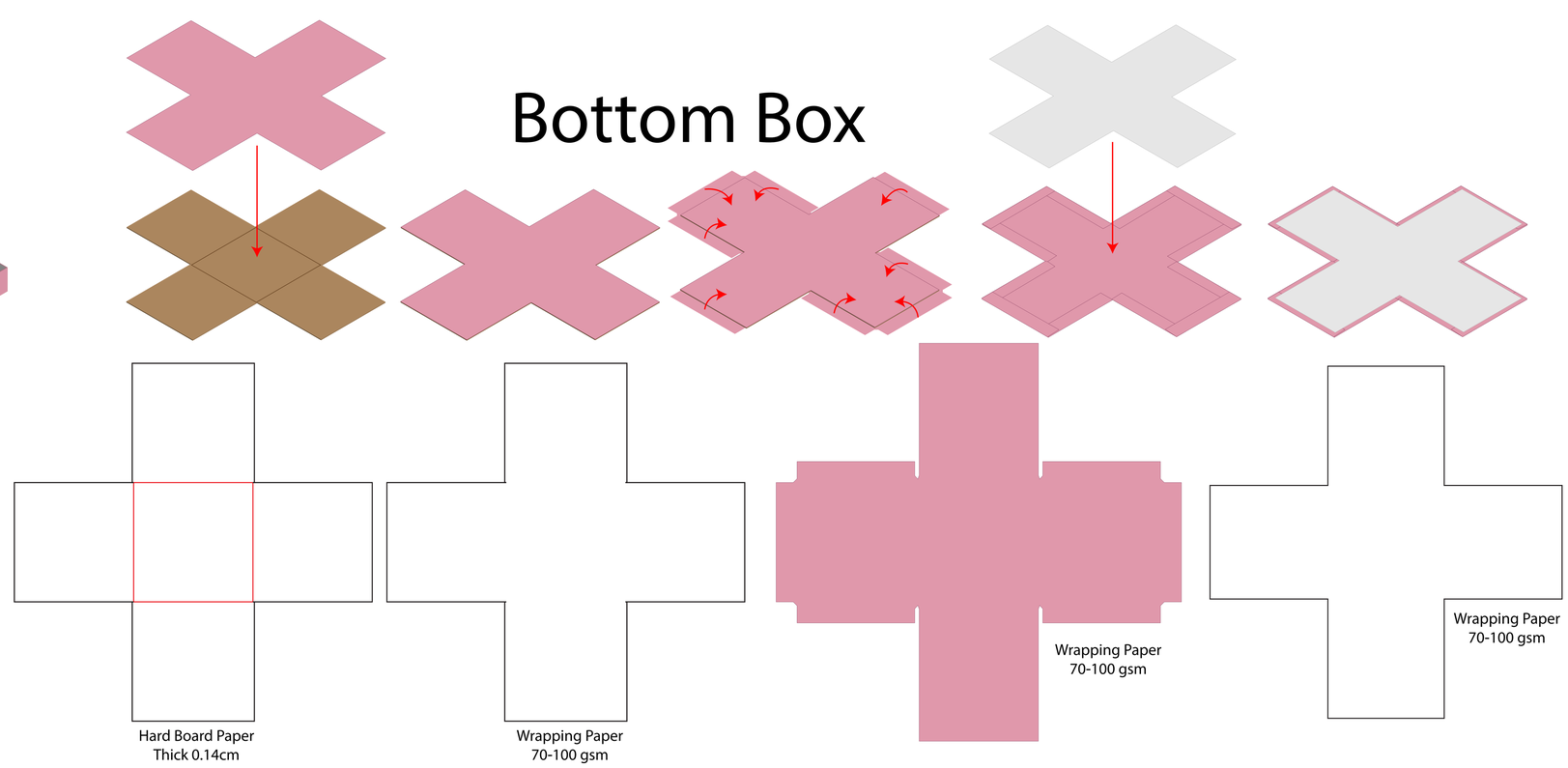

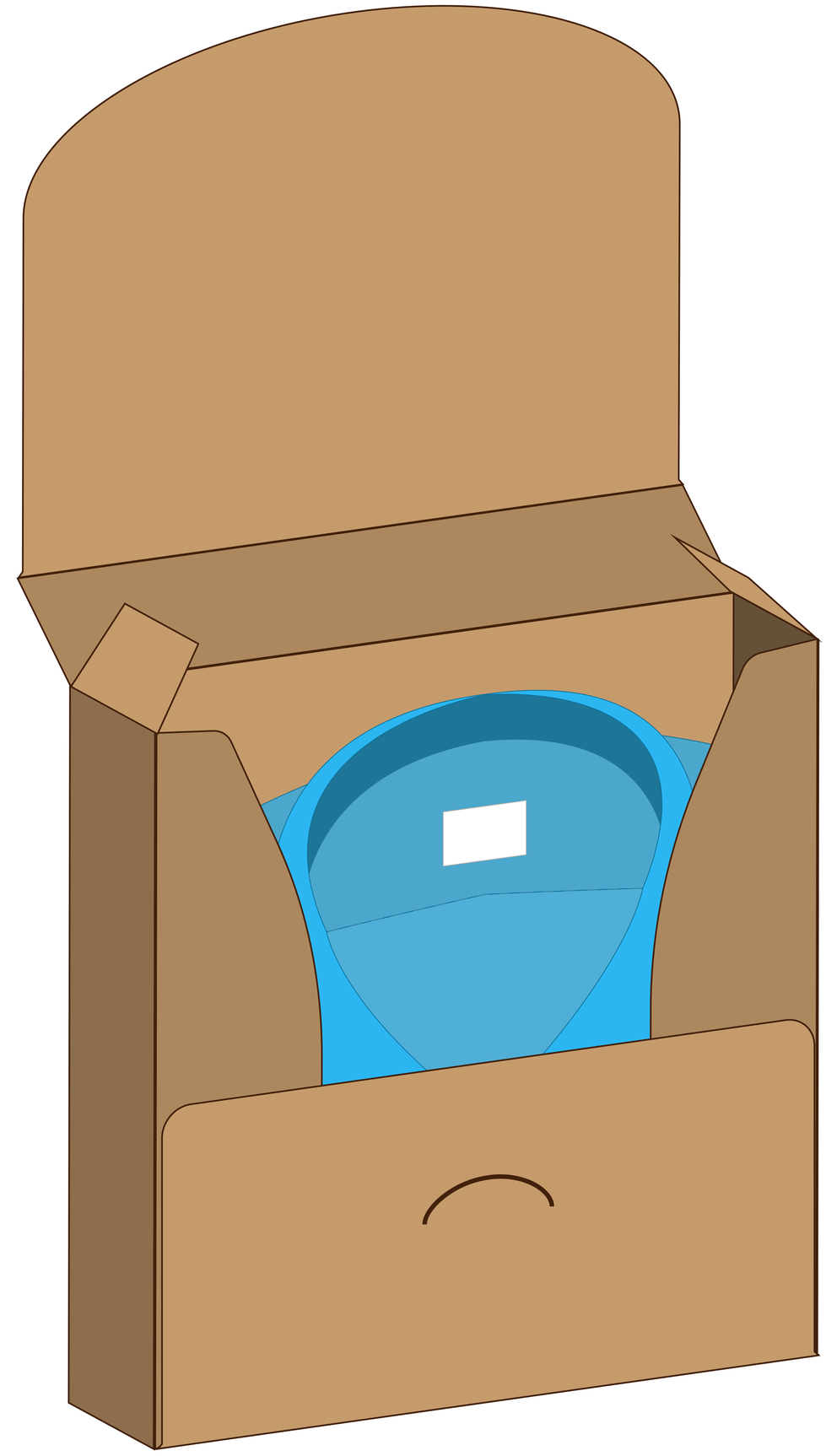

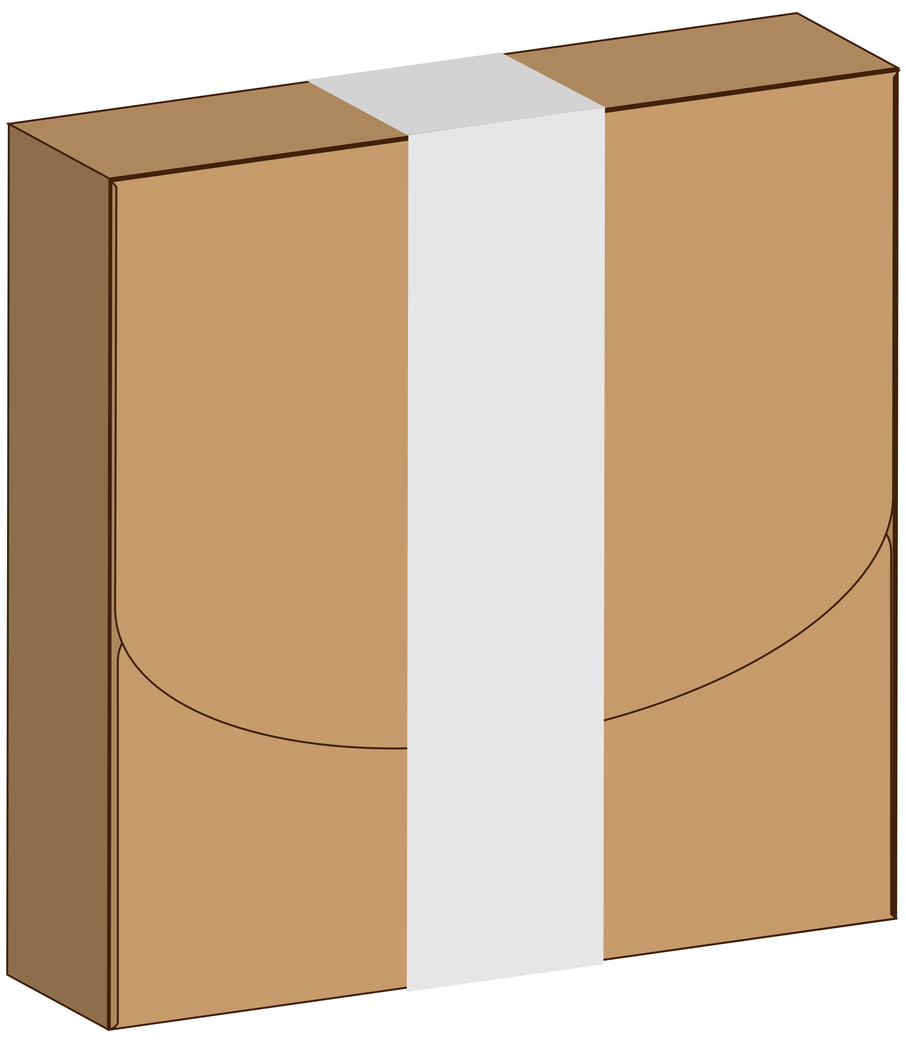

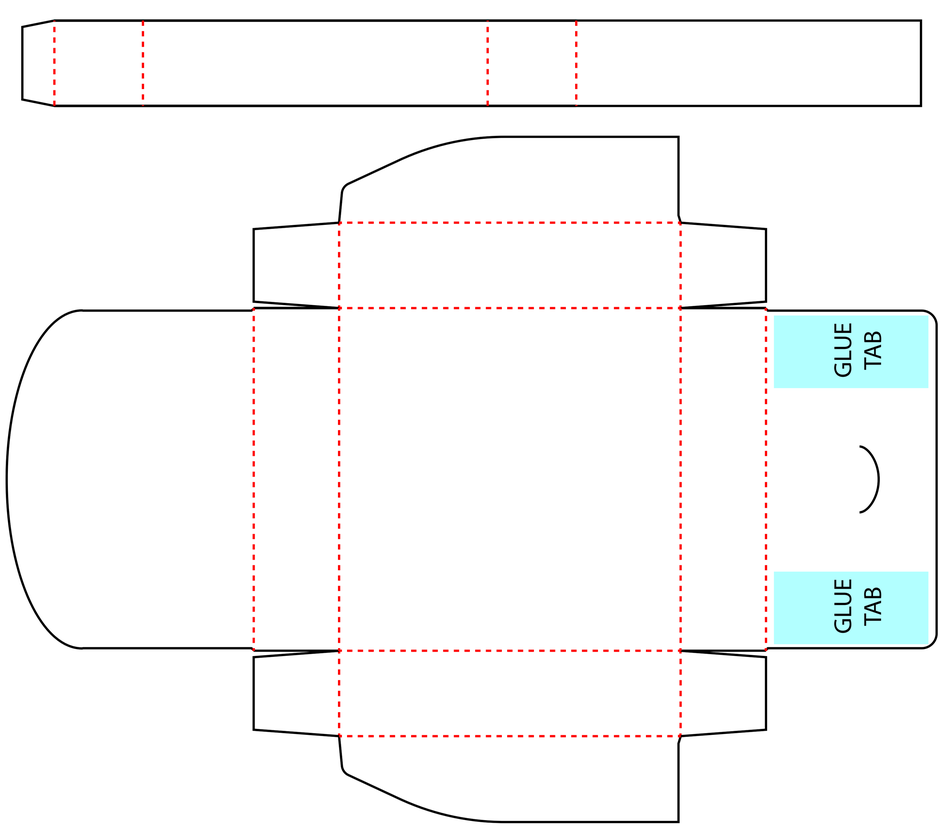
GLUE TAB
GLUE TAB

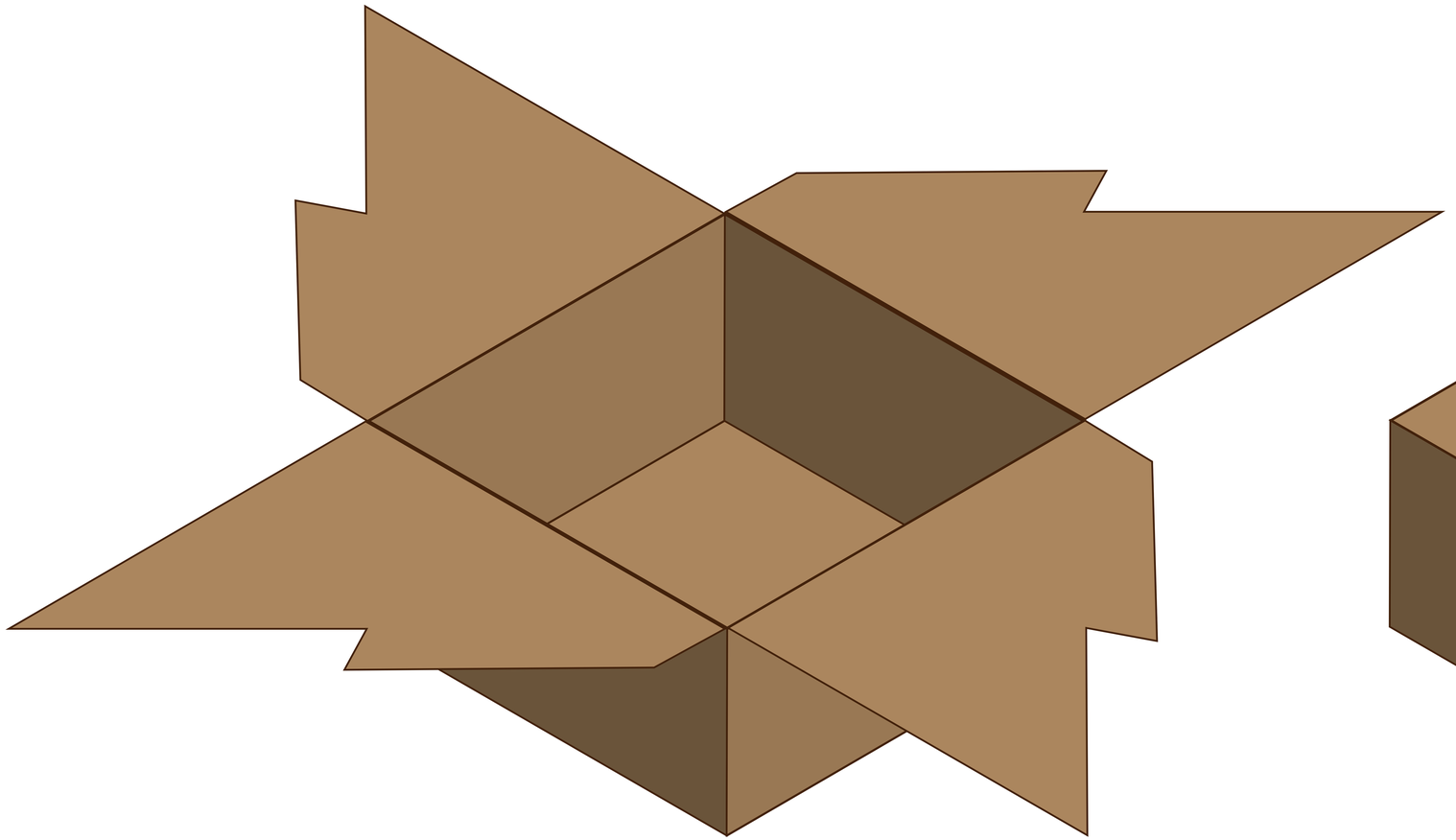

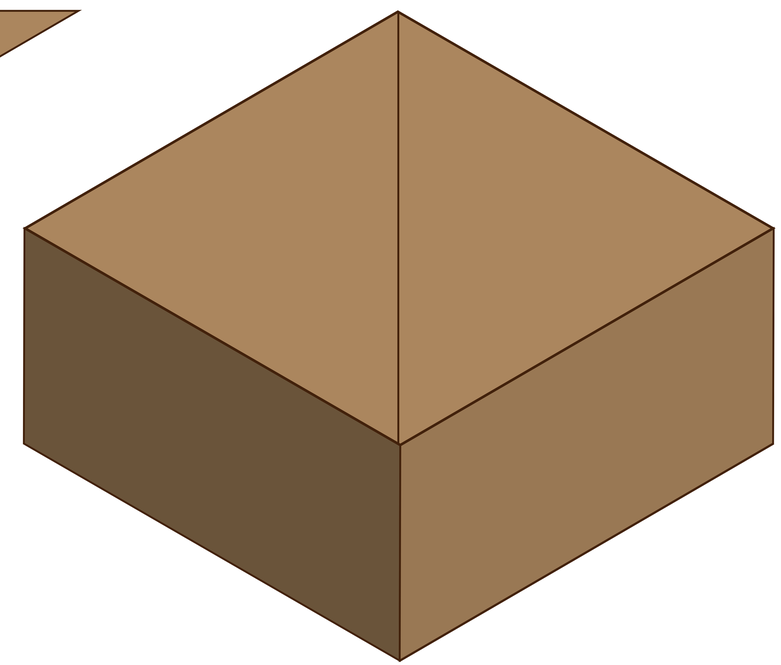

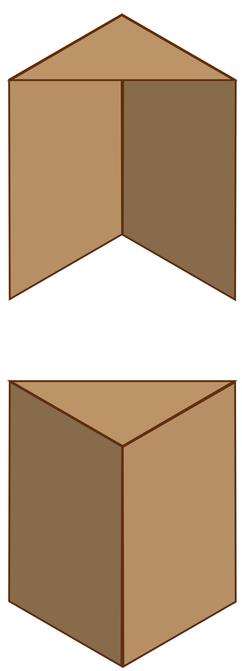

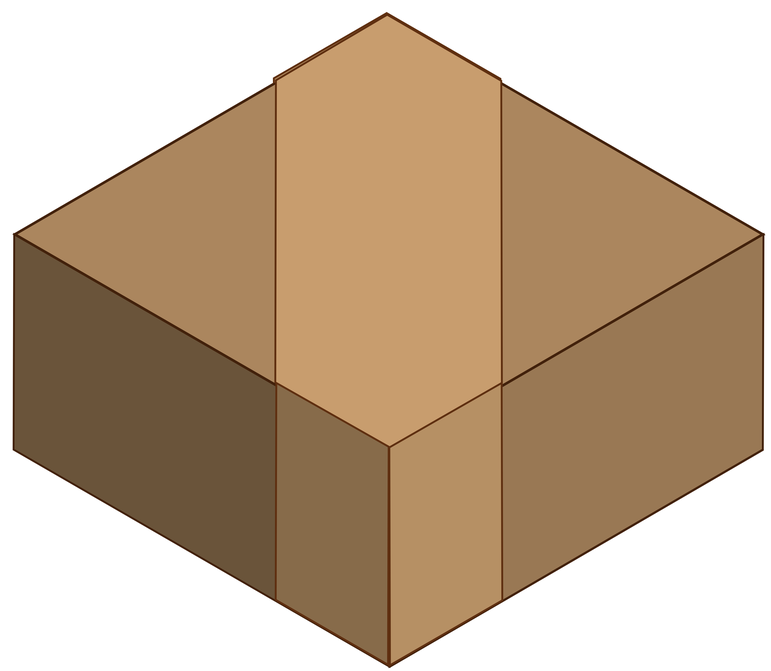

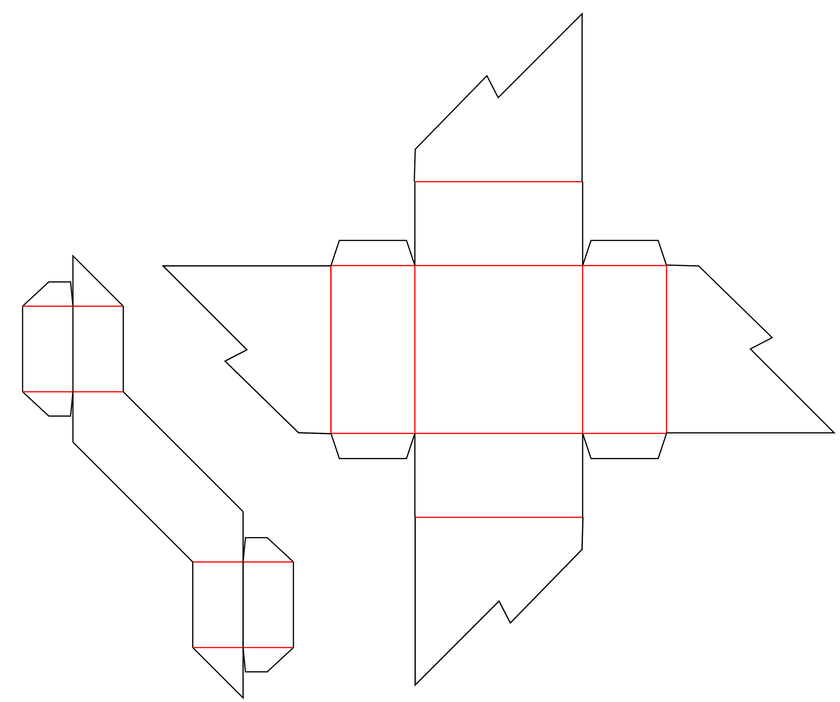

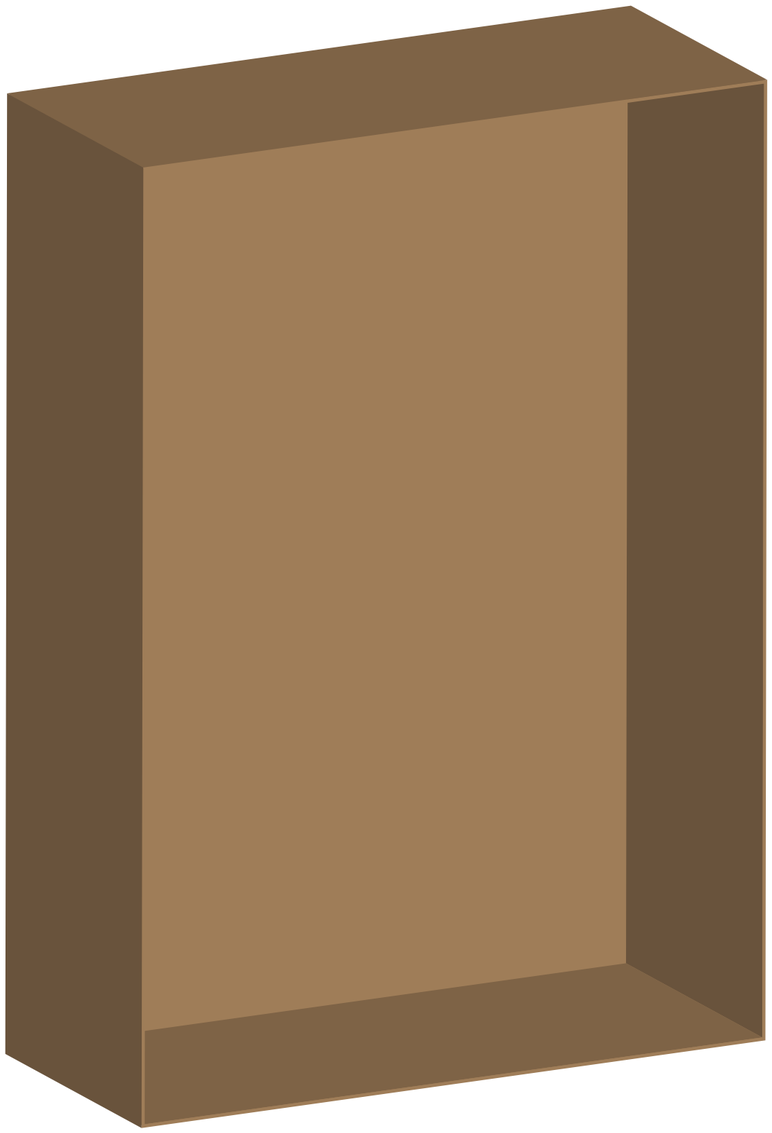

Logo
Brand
Name

Logo
Brand
Name

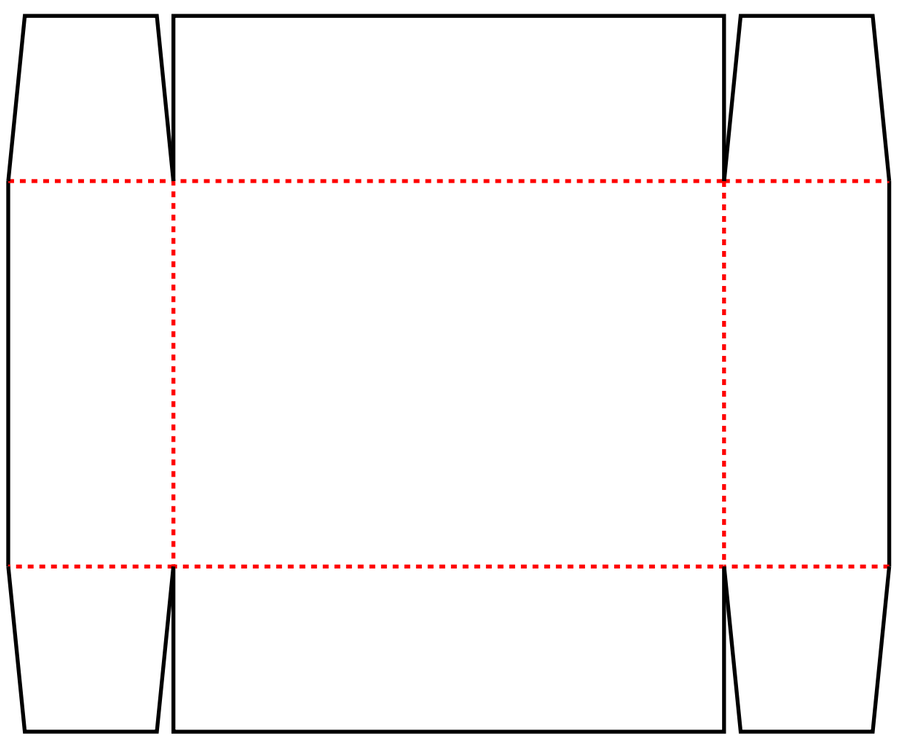

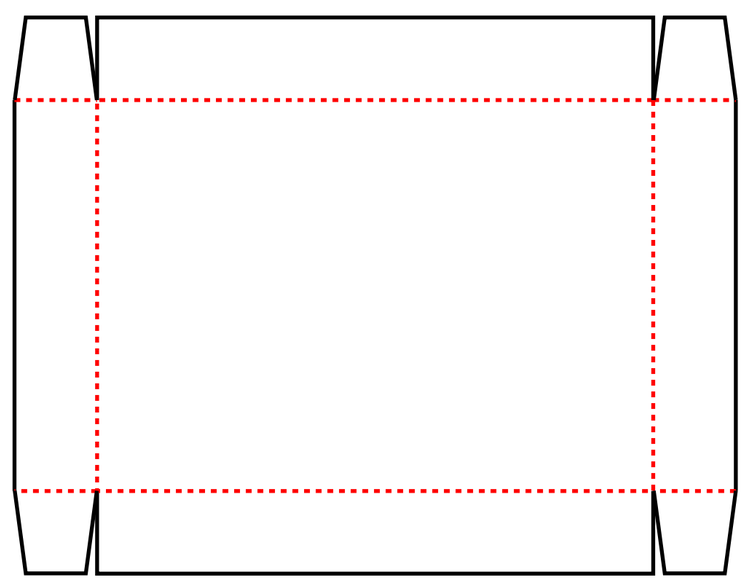

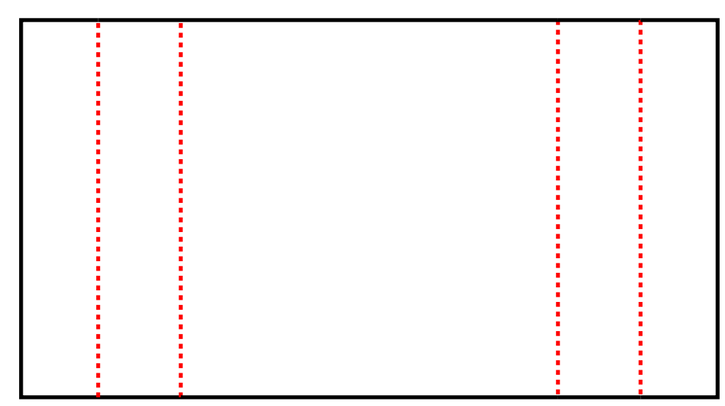

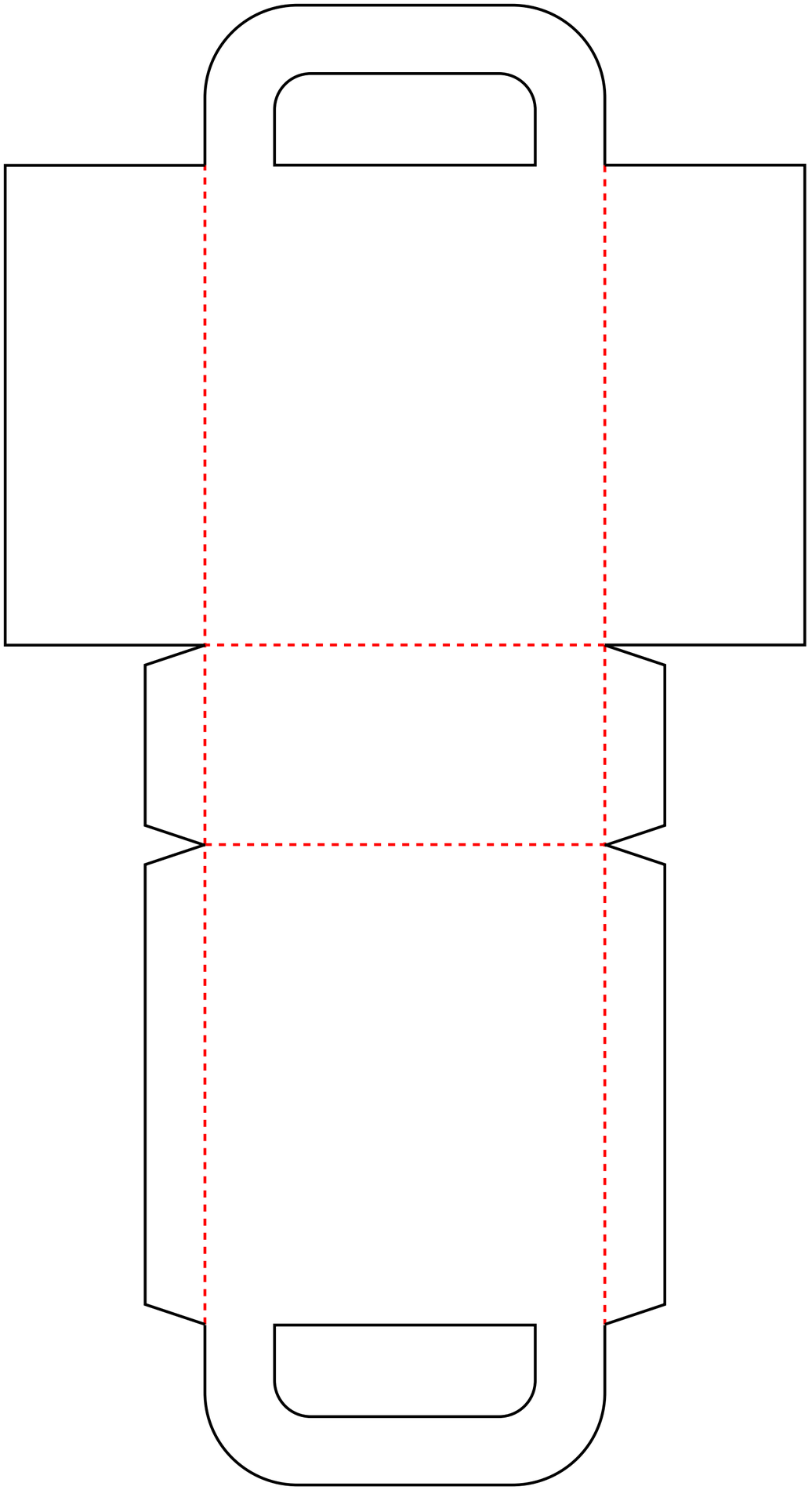

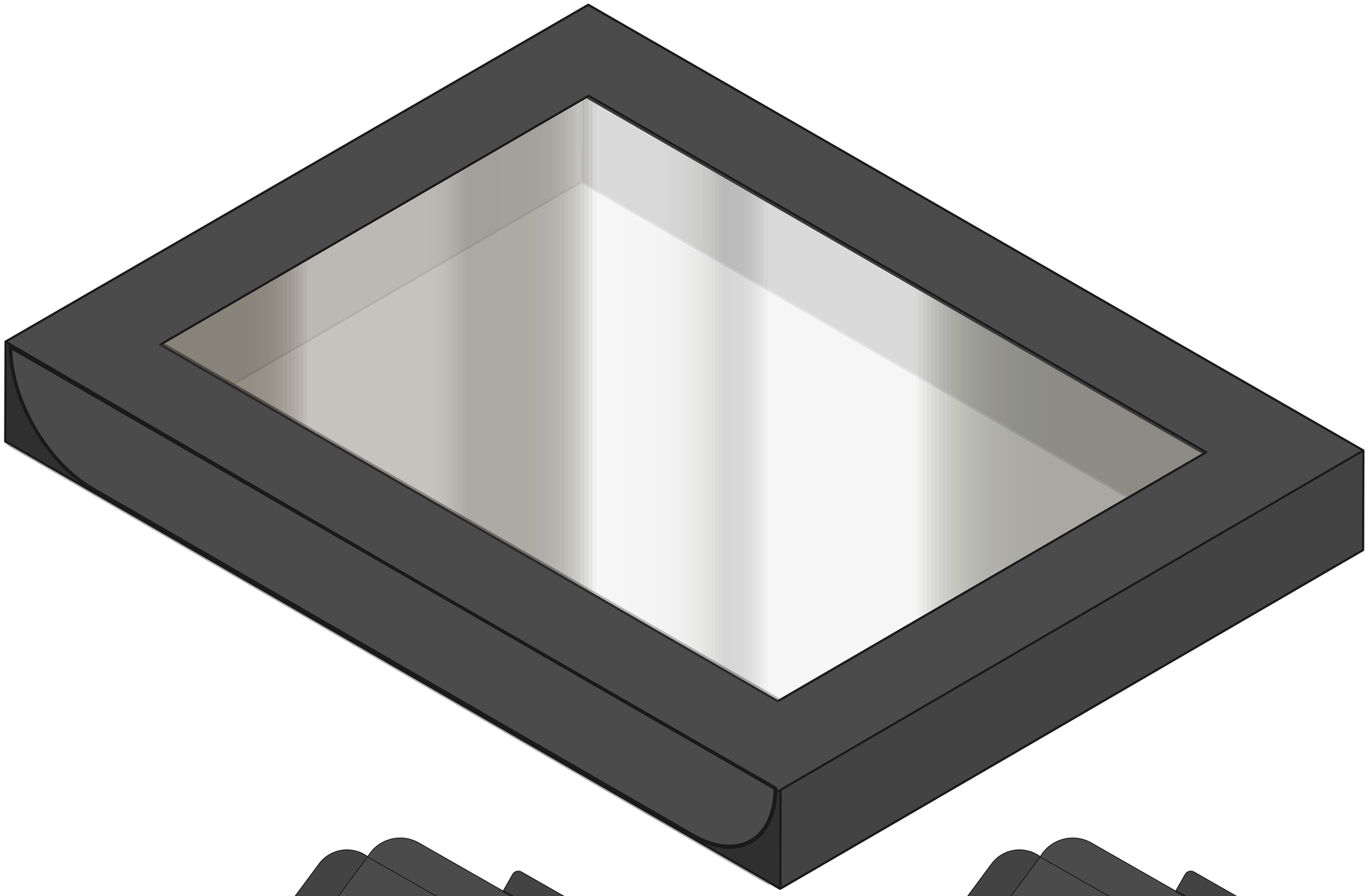

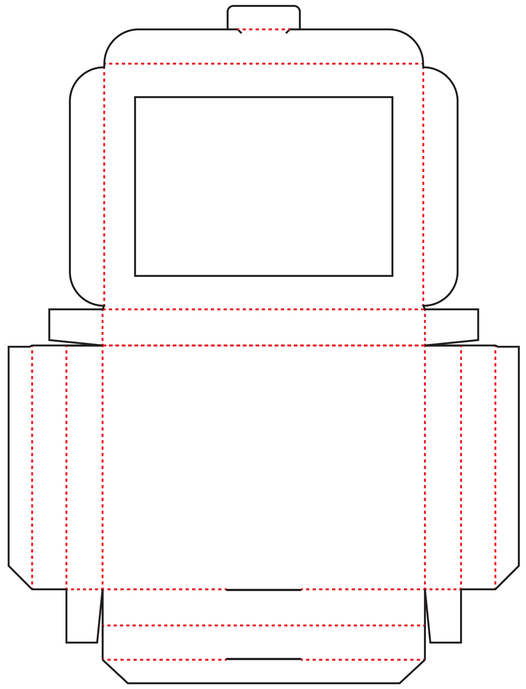

Option 1

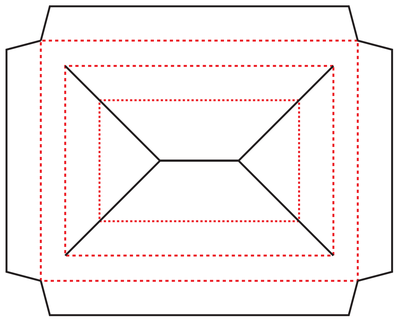

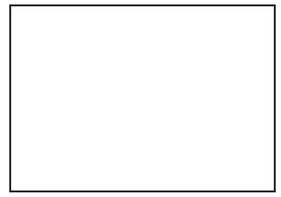

Option 2

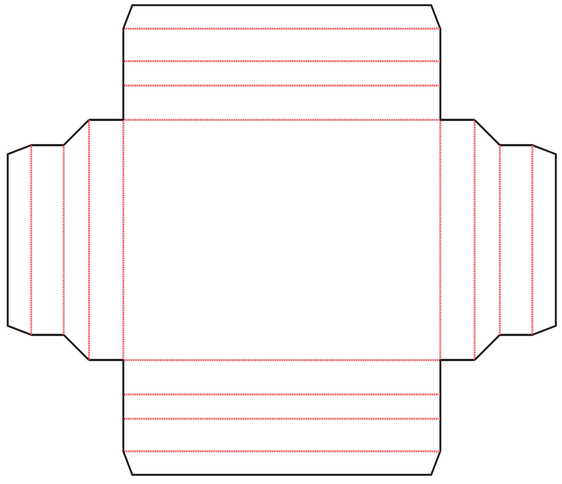

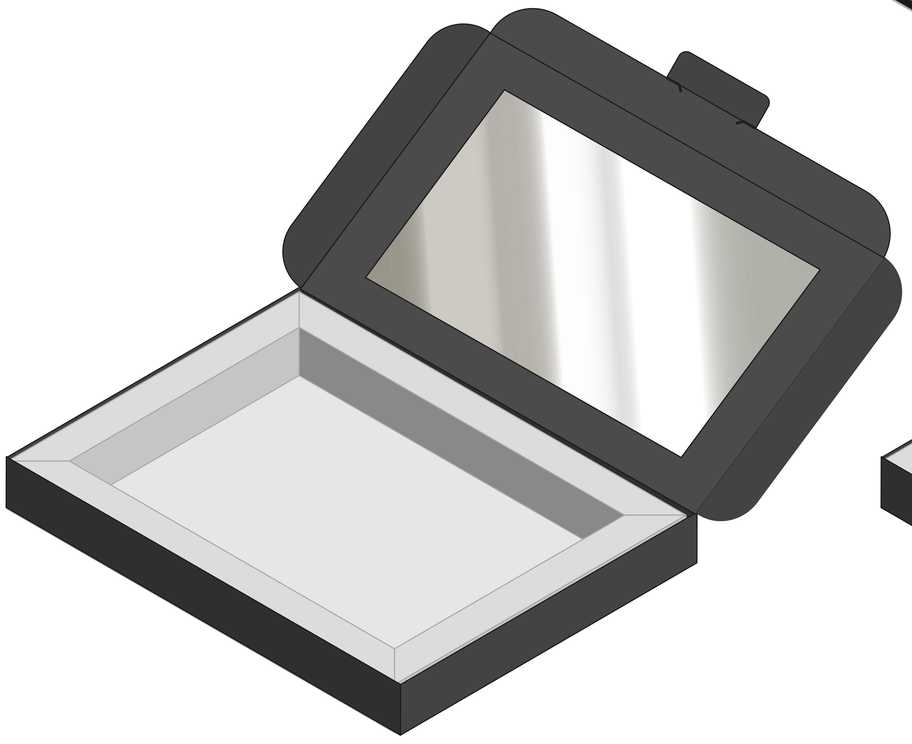

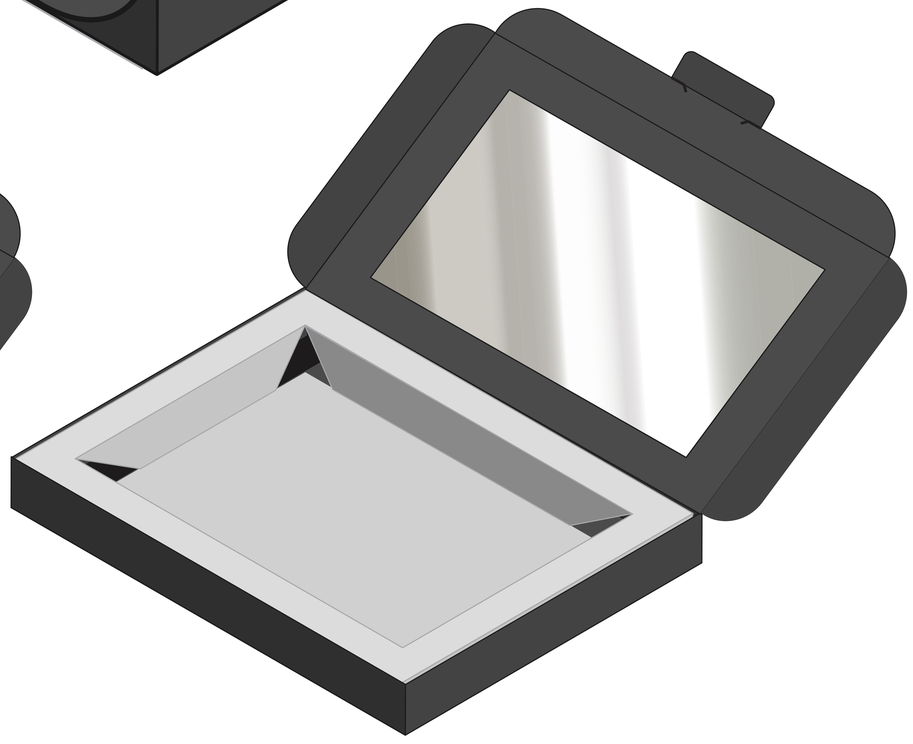

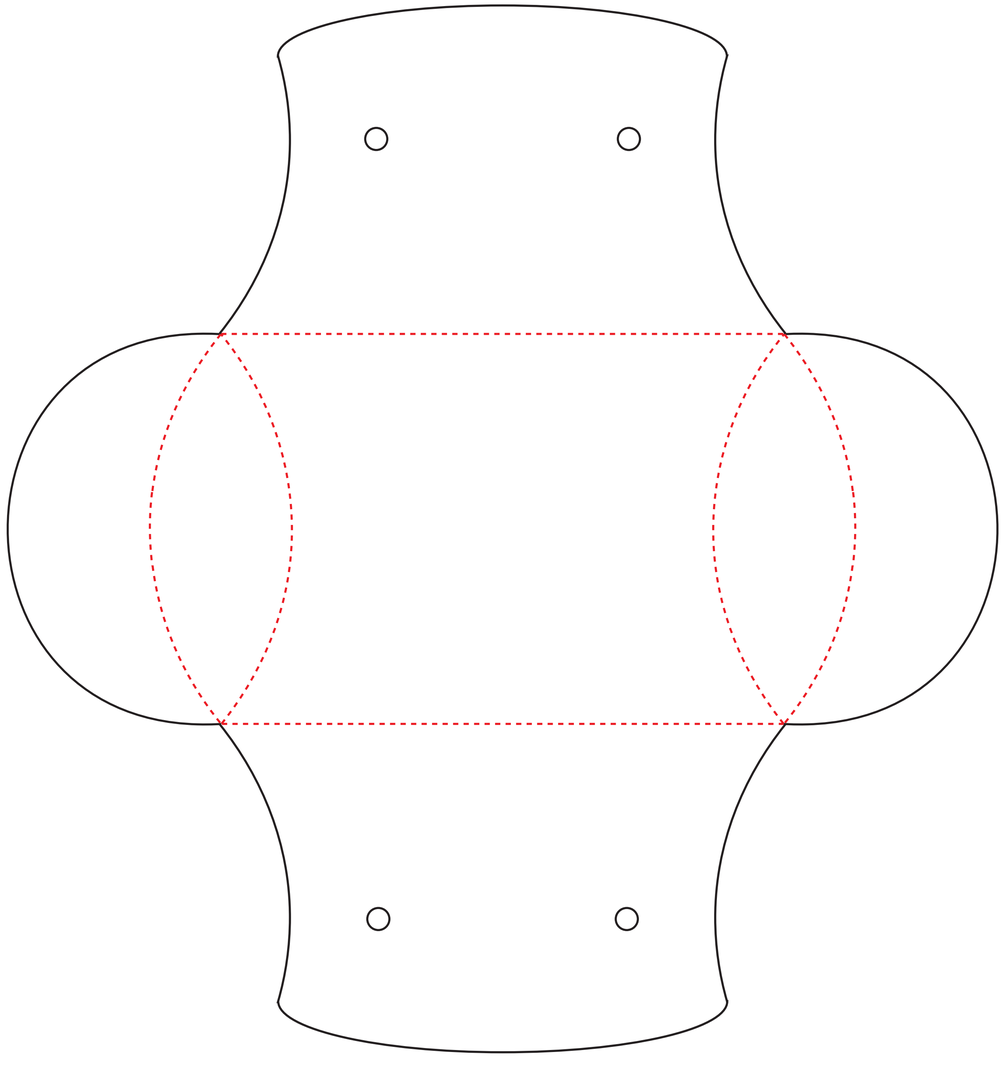

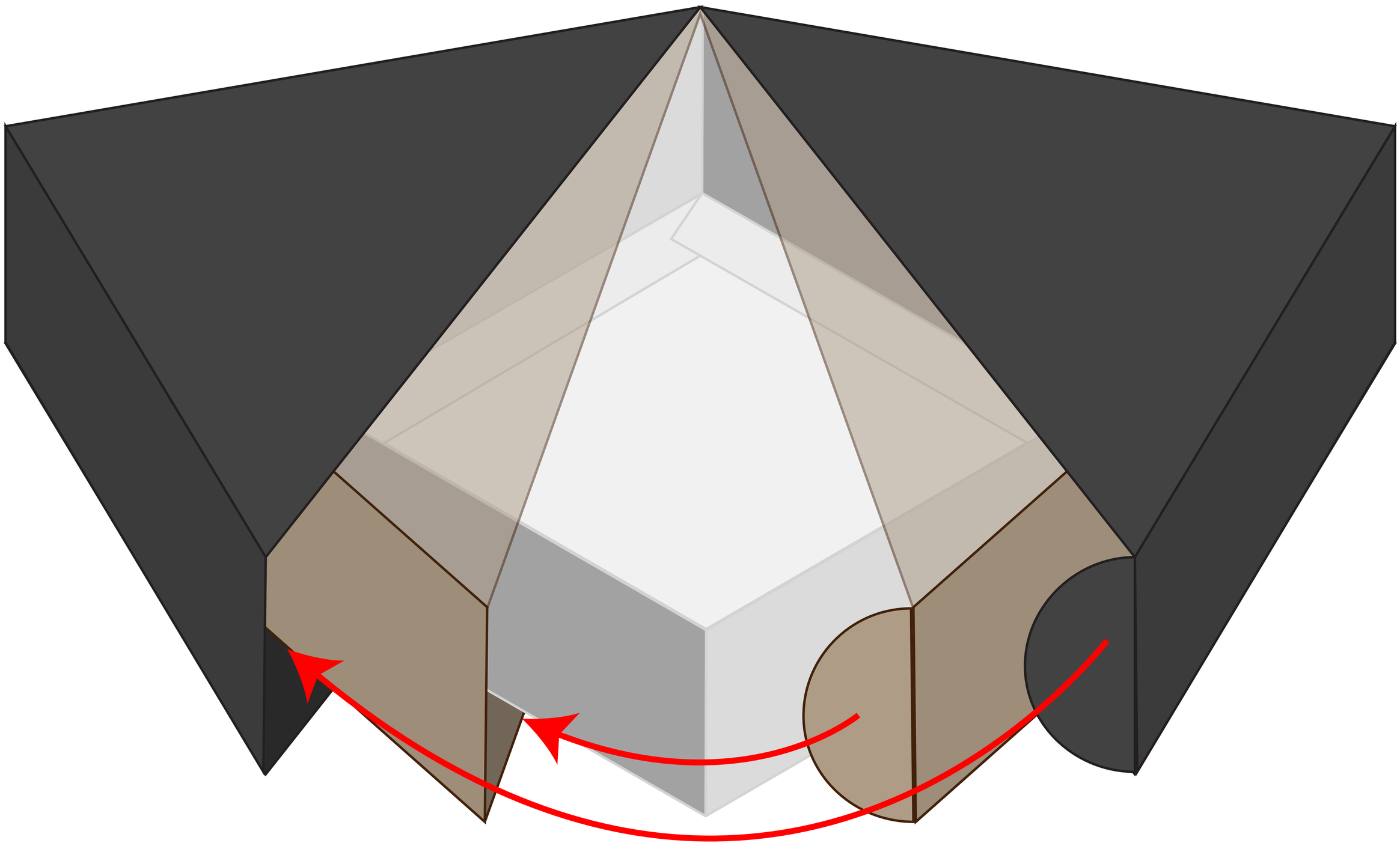

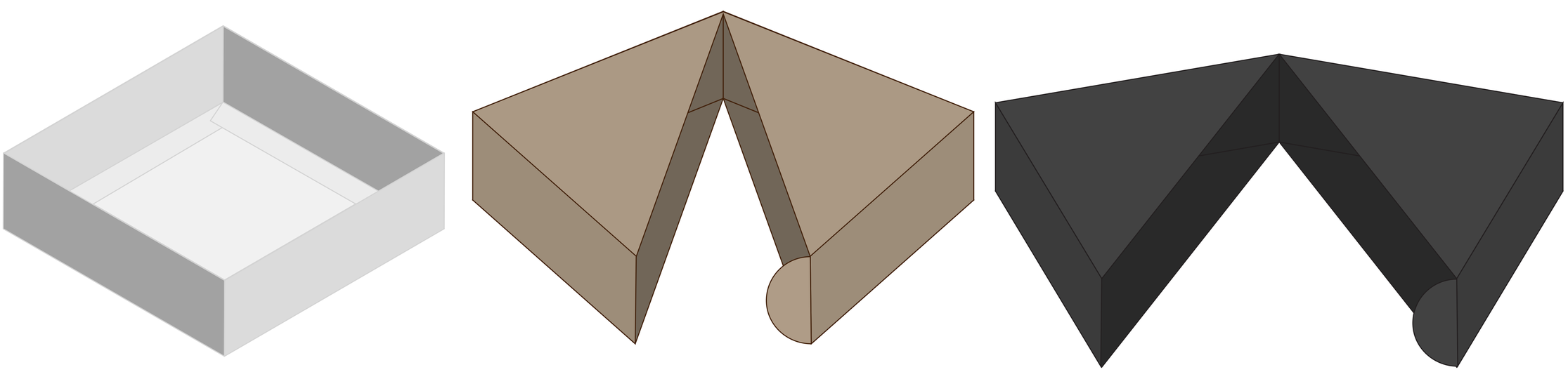

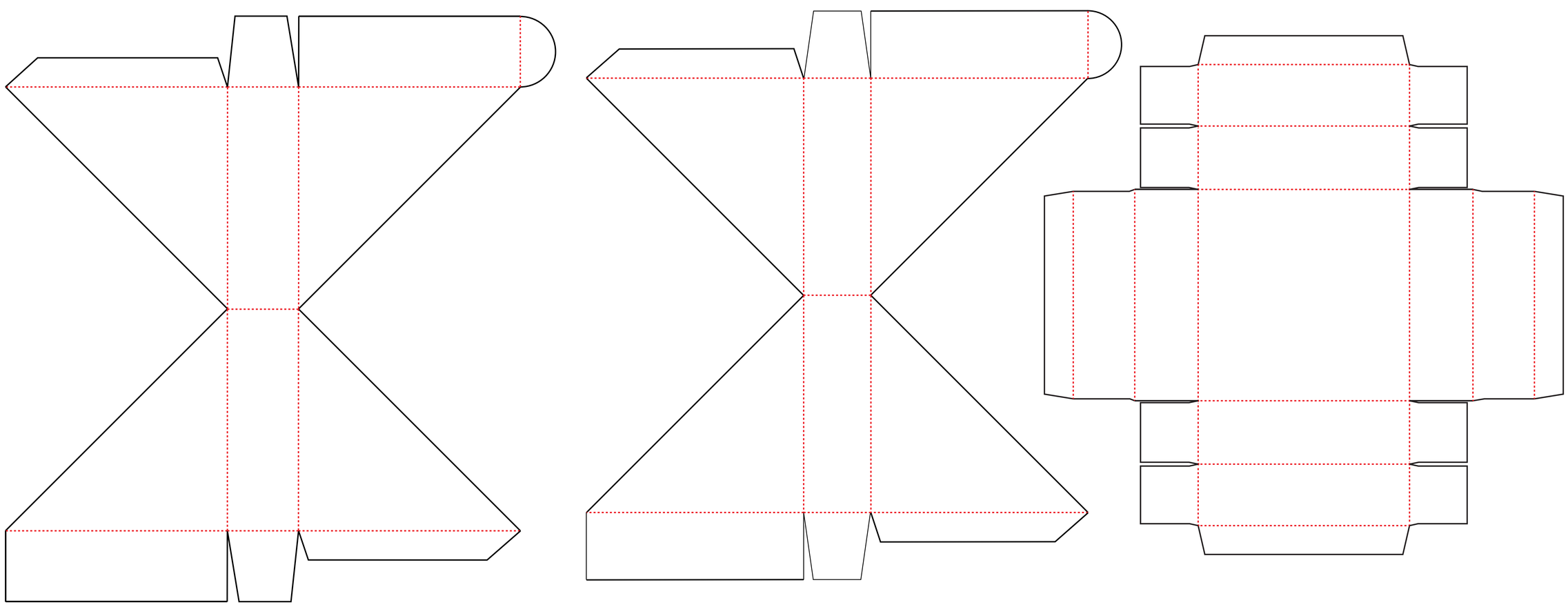

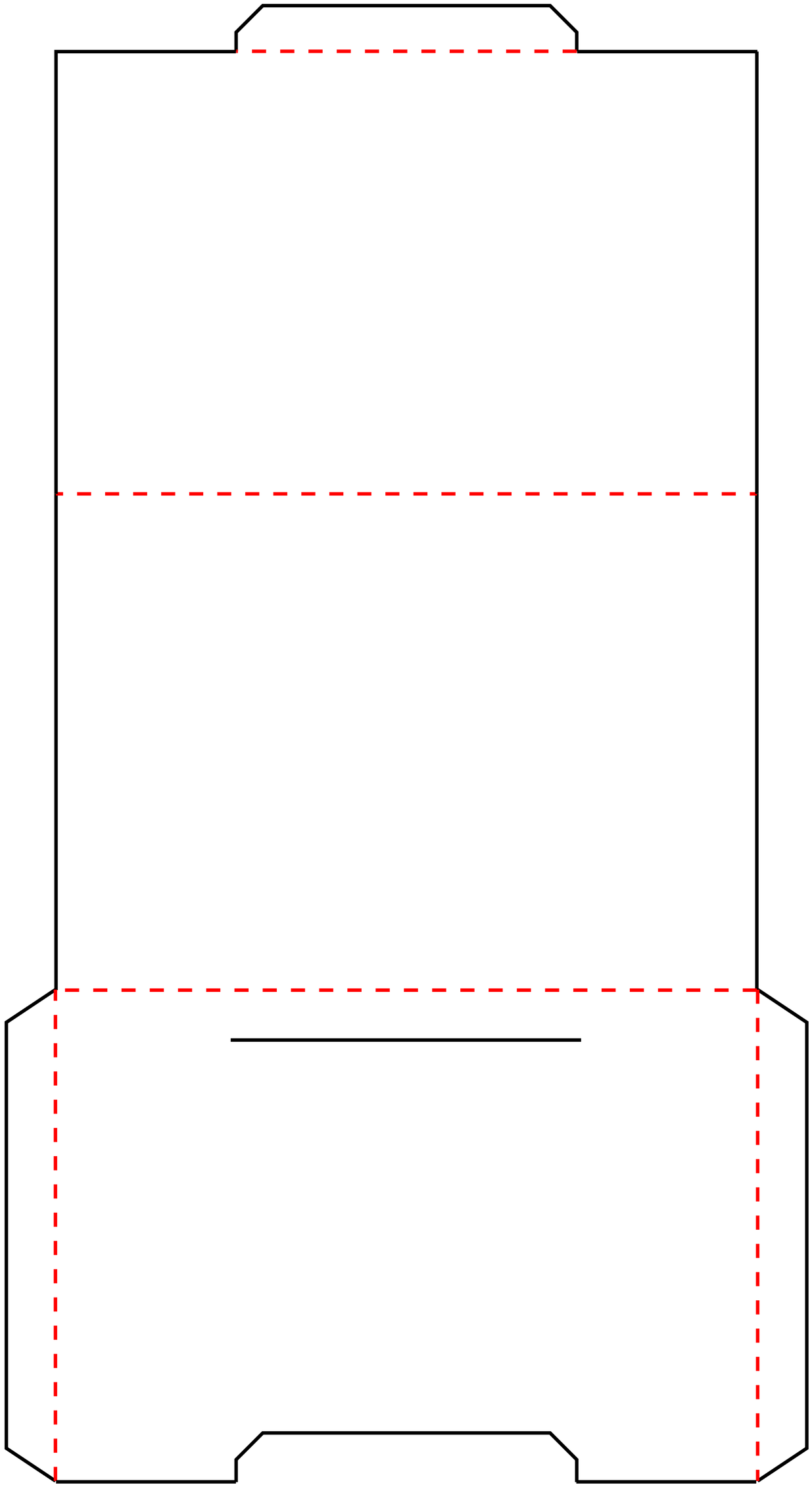

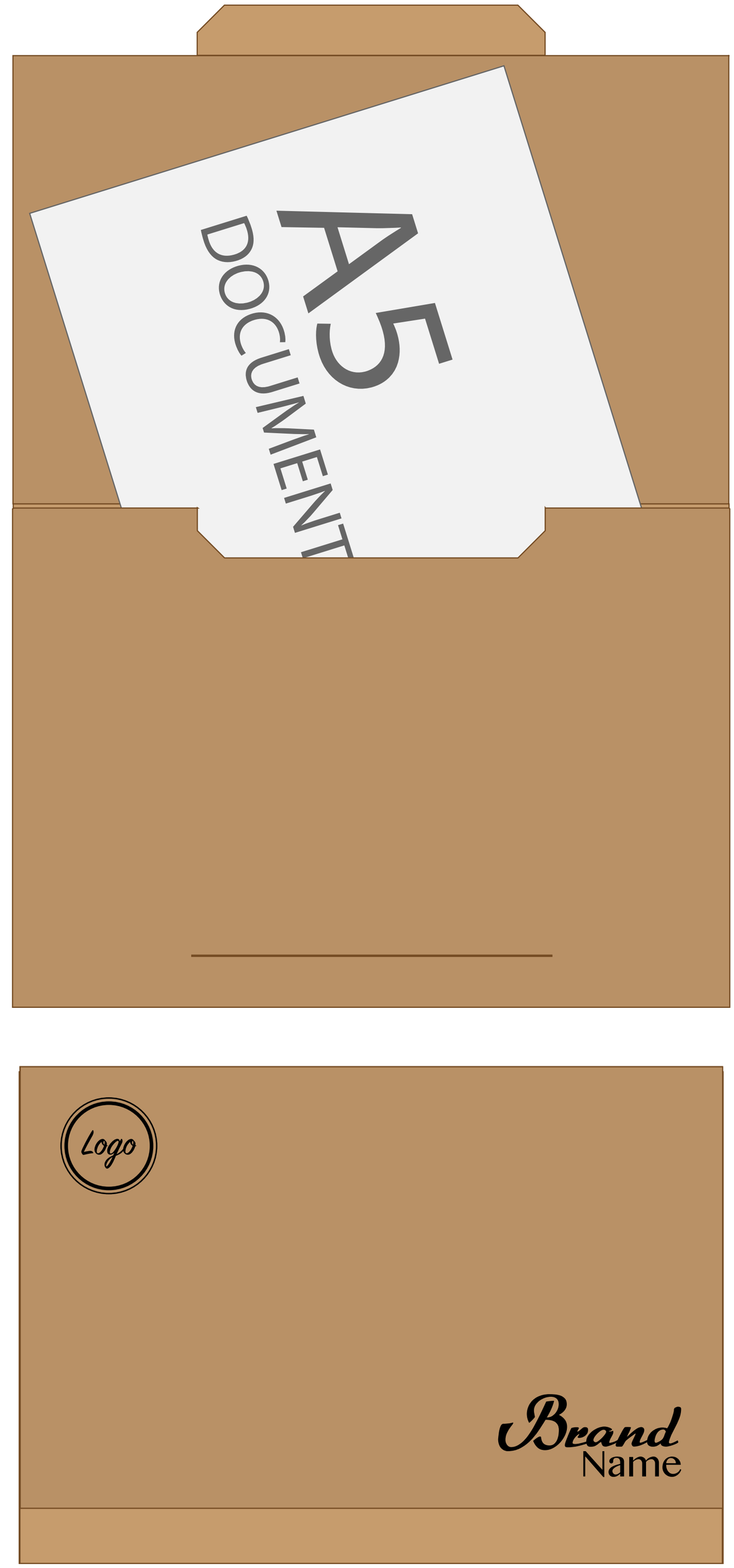

A5 Document Envelope

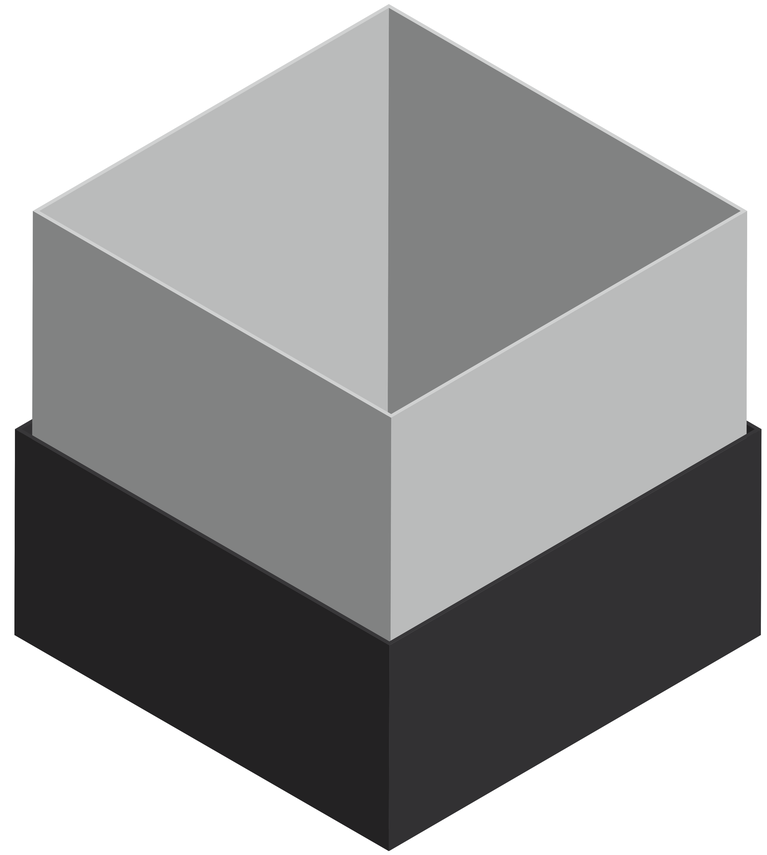

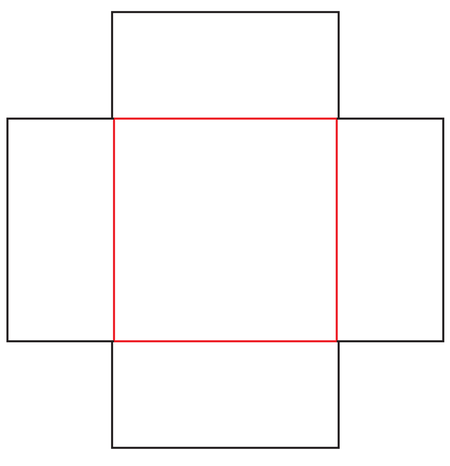

Wrapping Paper
2 Piece

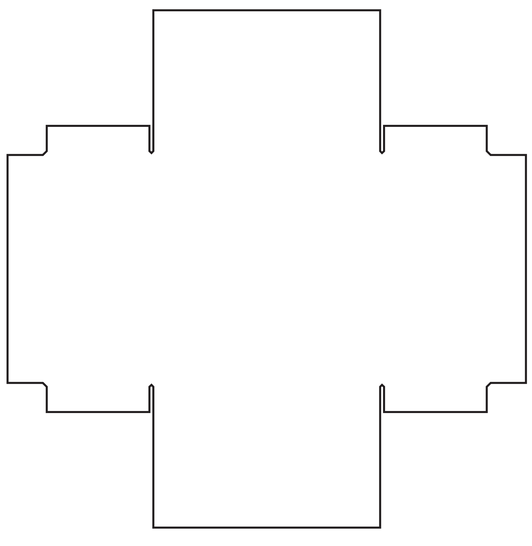

Hard Board Paper
Thick 0.1 cm
2 Piece

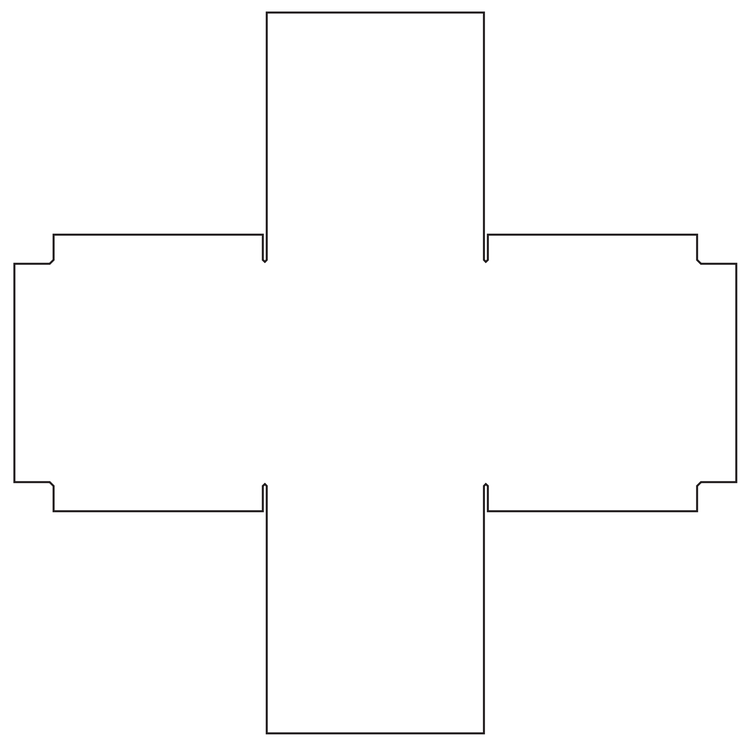

Wrapping Paper
Bottom Box

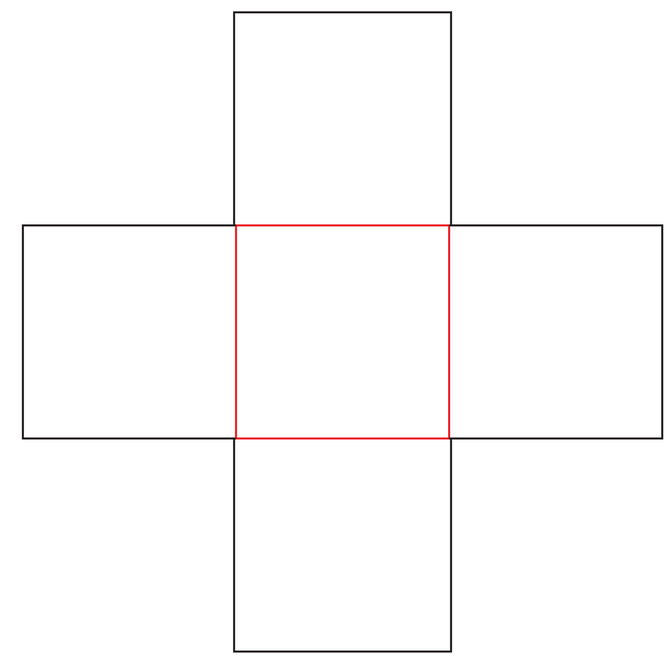

Hard Board Paper
Thick 0.1 cm
Bottom Box

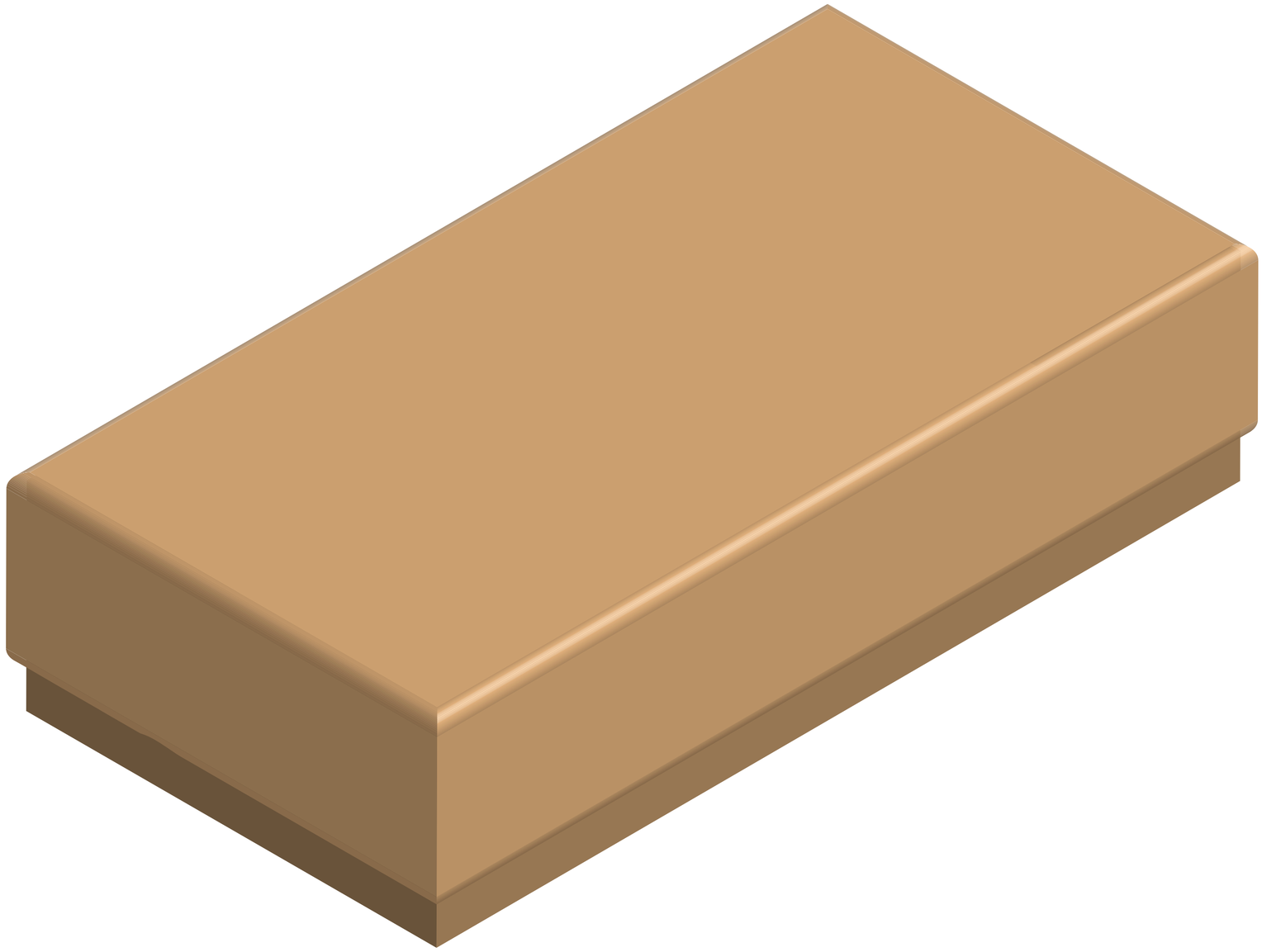

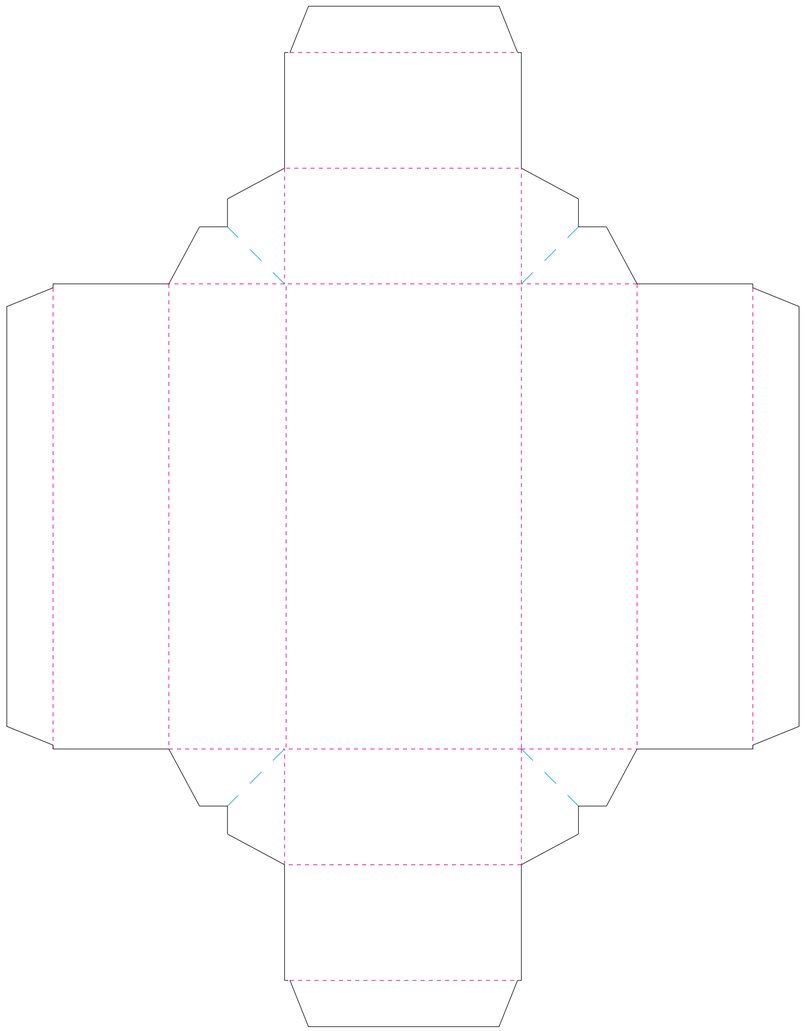

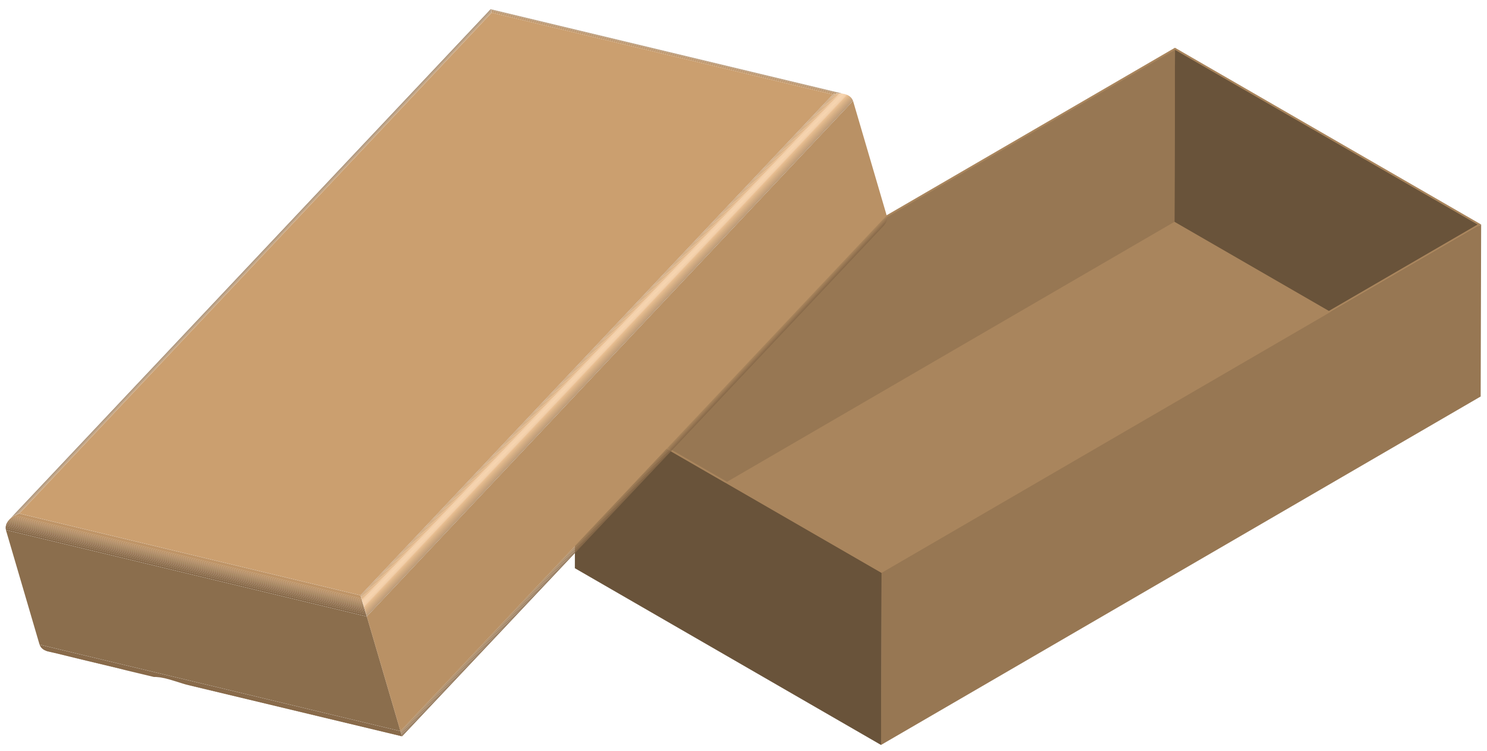

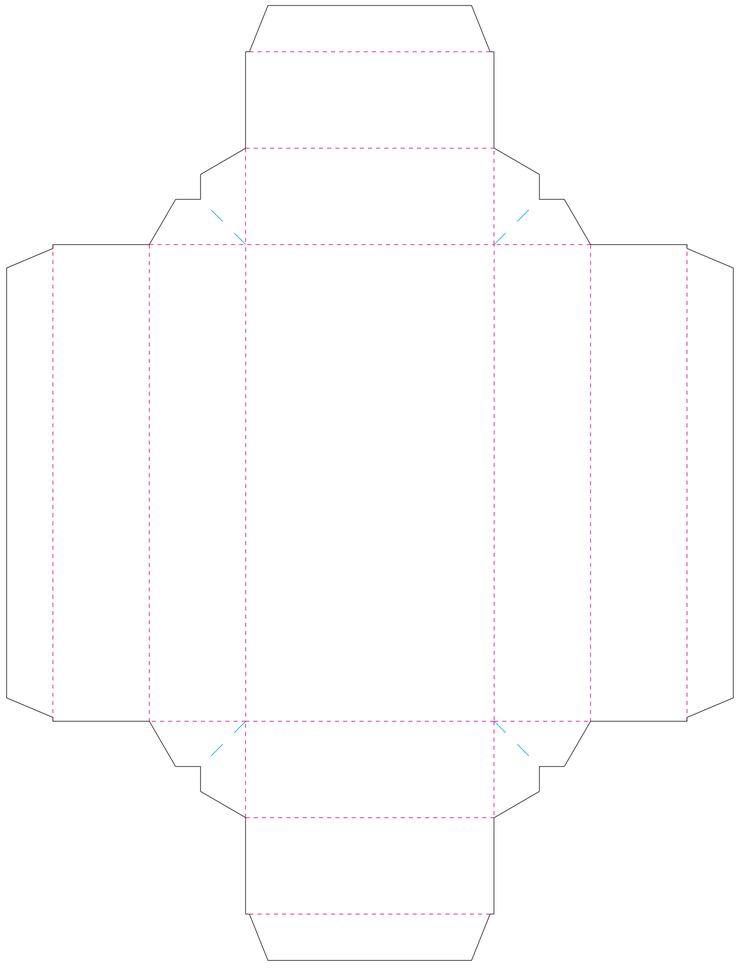

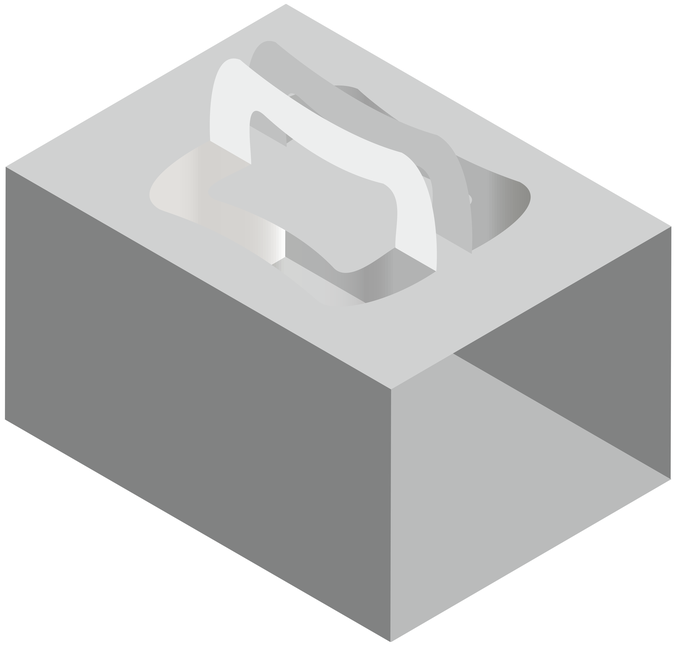

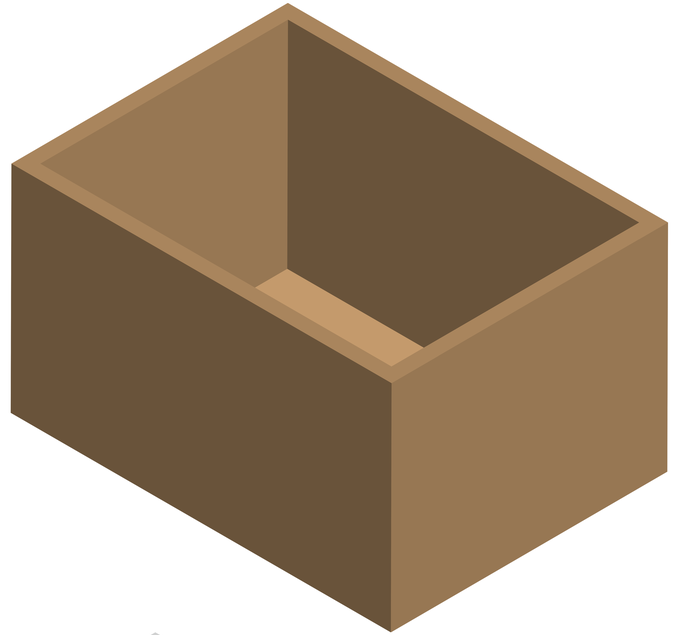

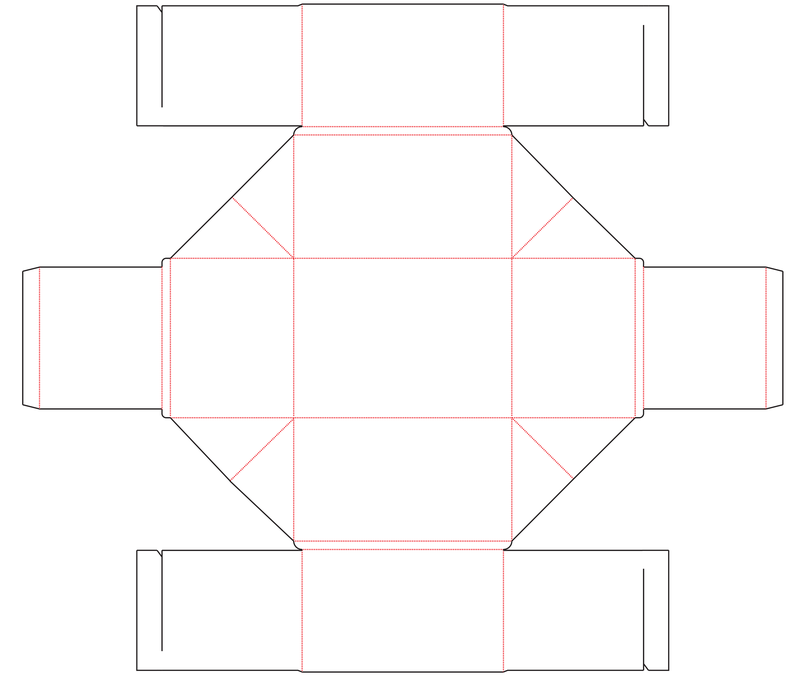

Hard Paper 300-350 gsm Tray Box

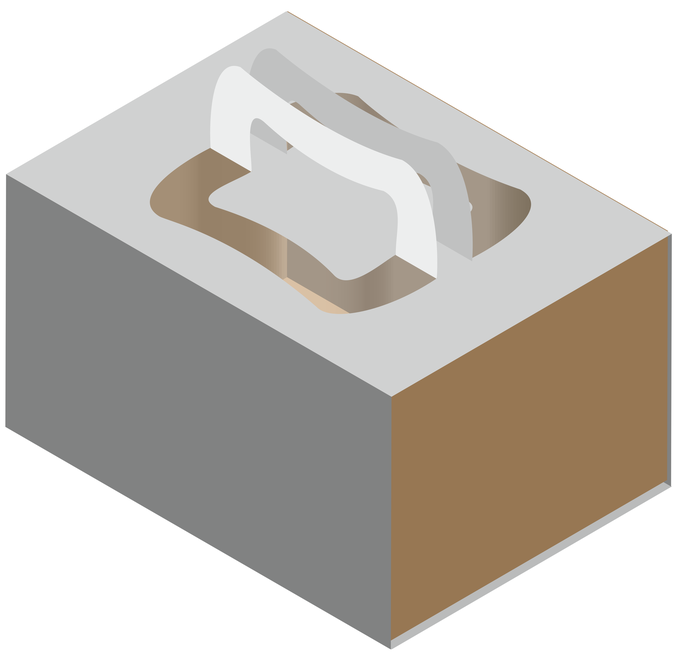

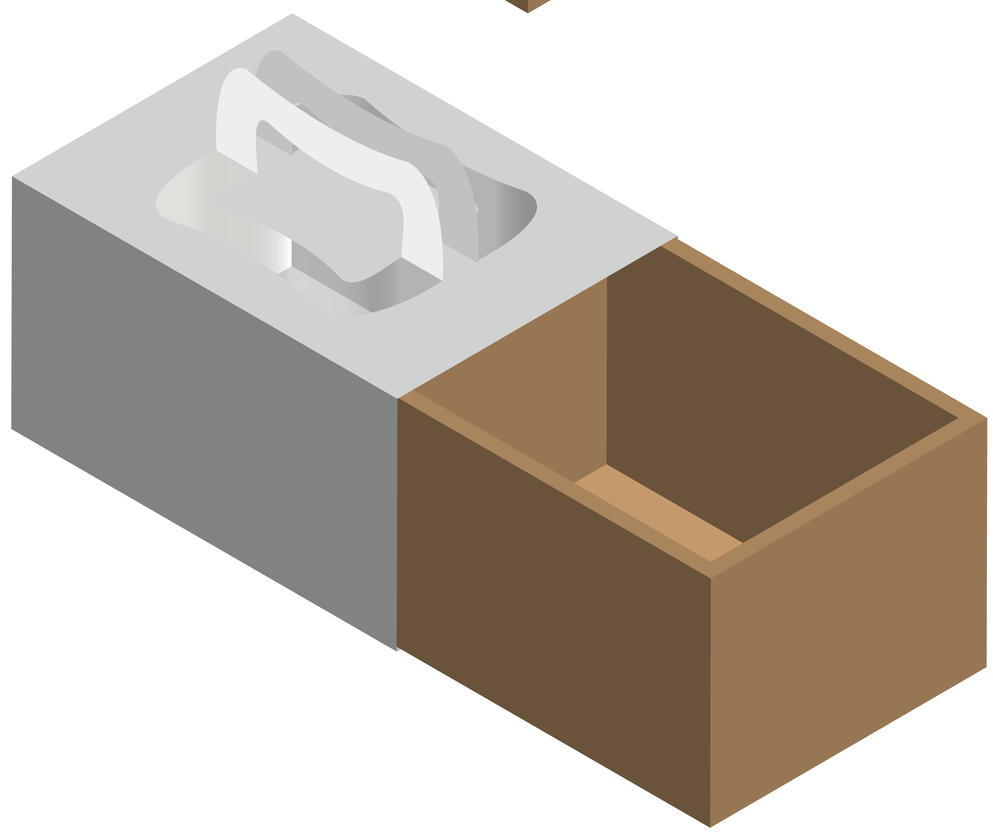

Transparent Plastic Sheet
150 Micron

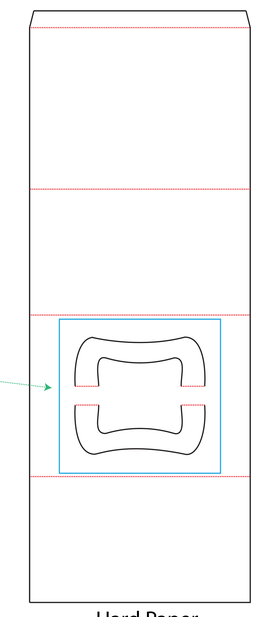

Hard Paper
300-350 gsm
Sleeve Box

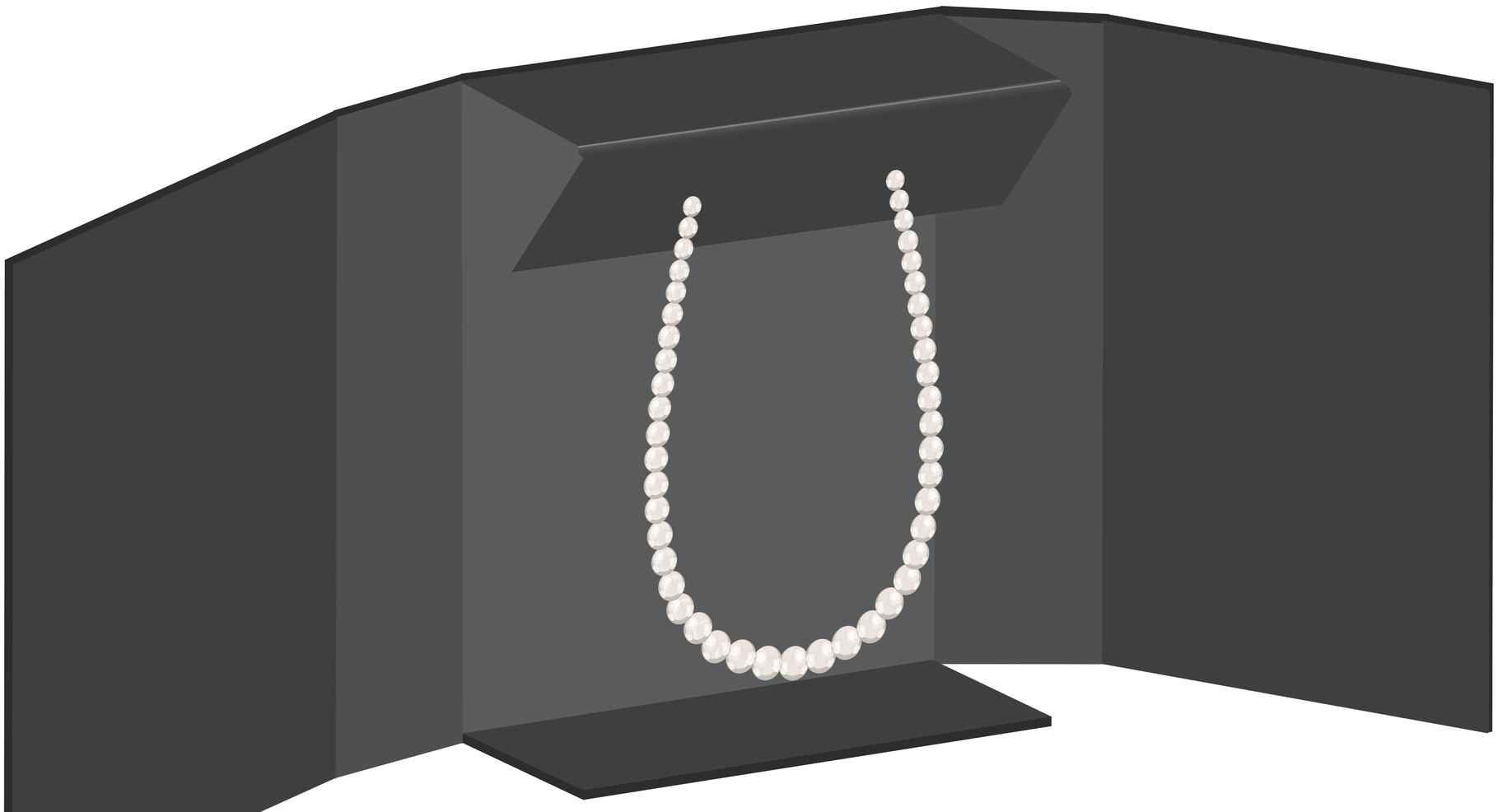

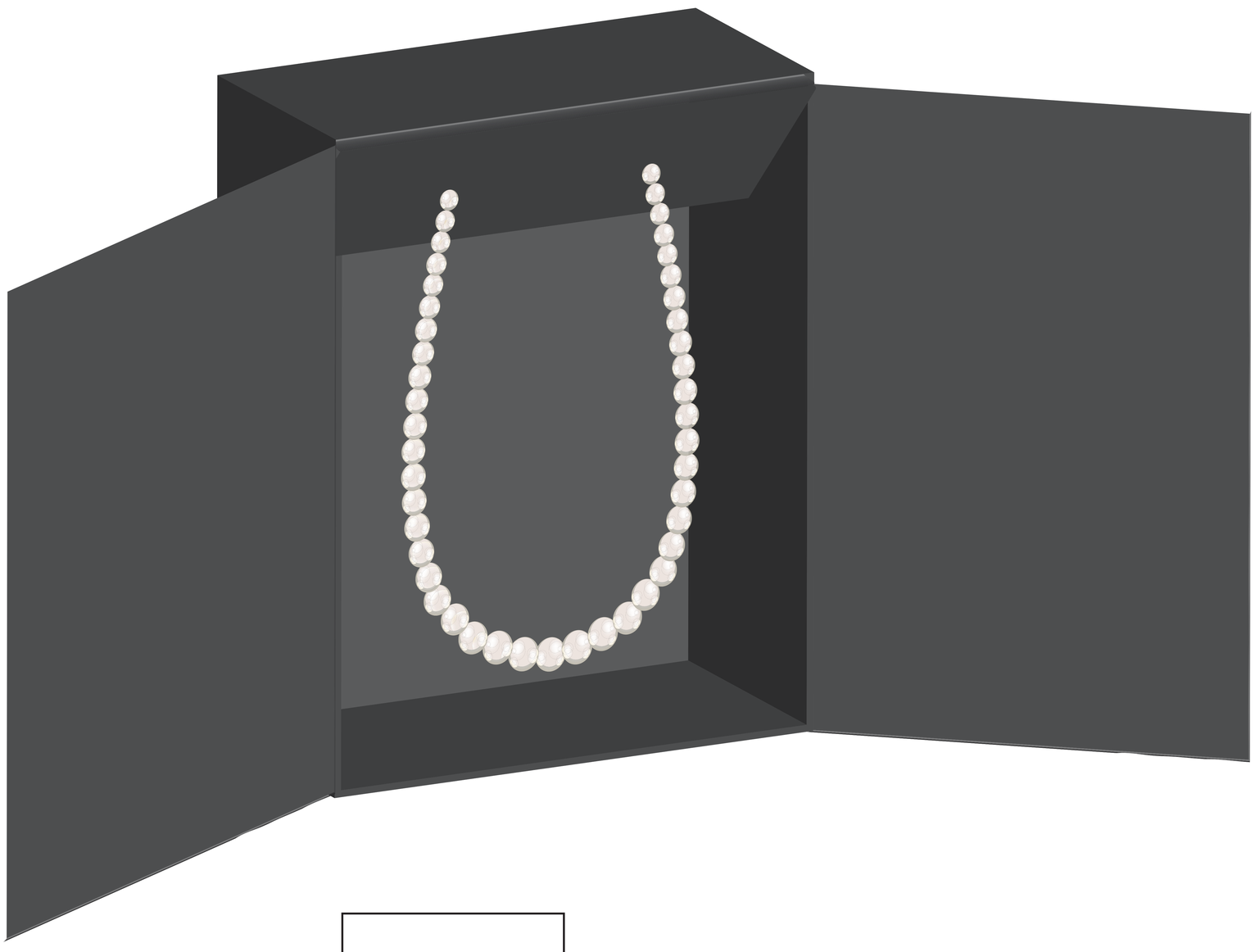

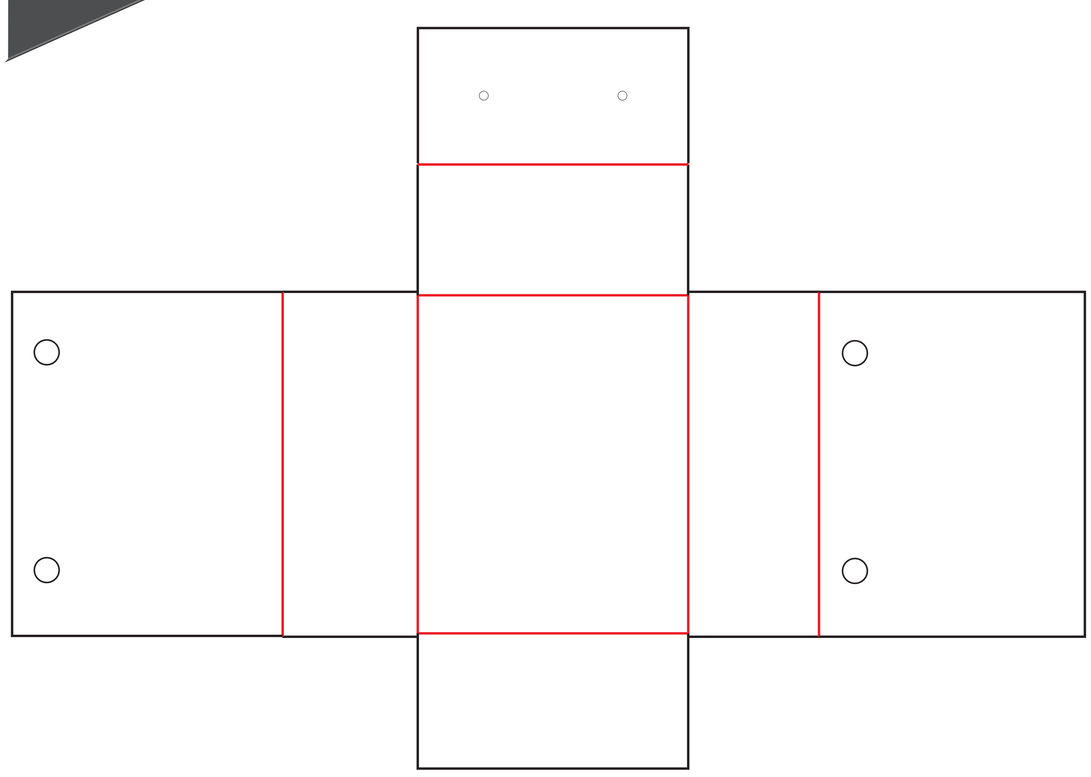

Hard Board Paper
Thick 0.16 cm
Bottom Box

Round Magnet 1 cm
4 piece

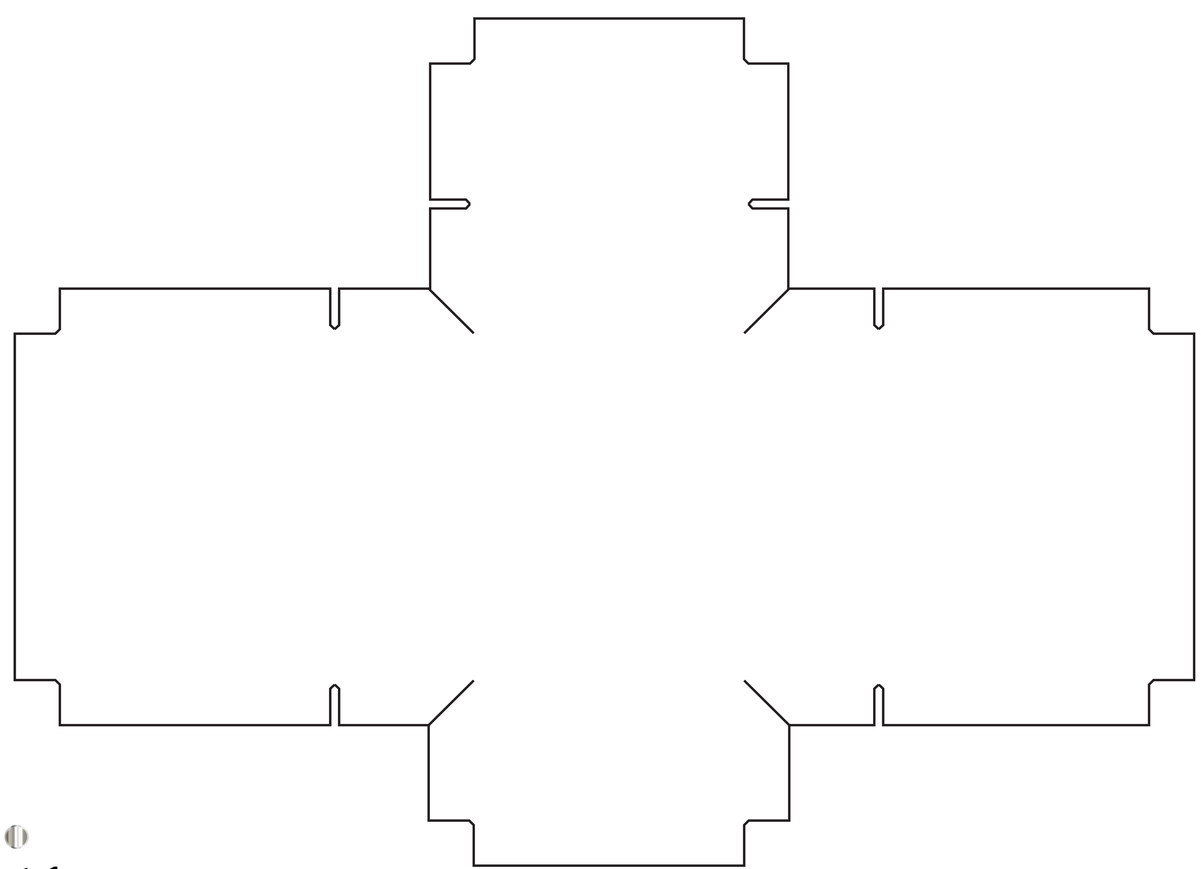

Wrapping Paper
Bottom Box

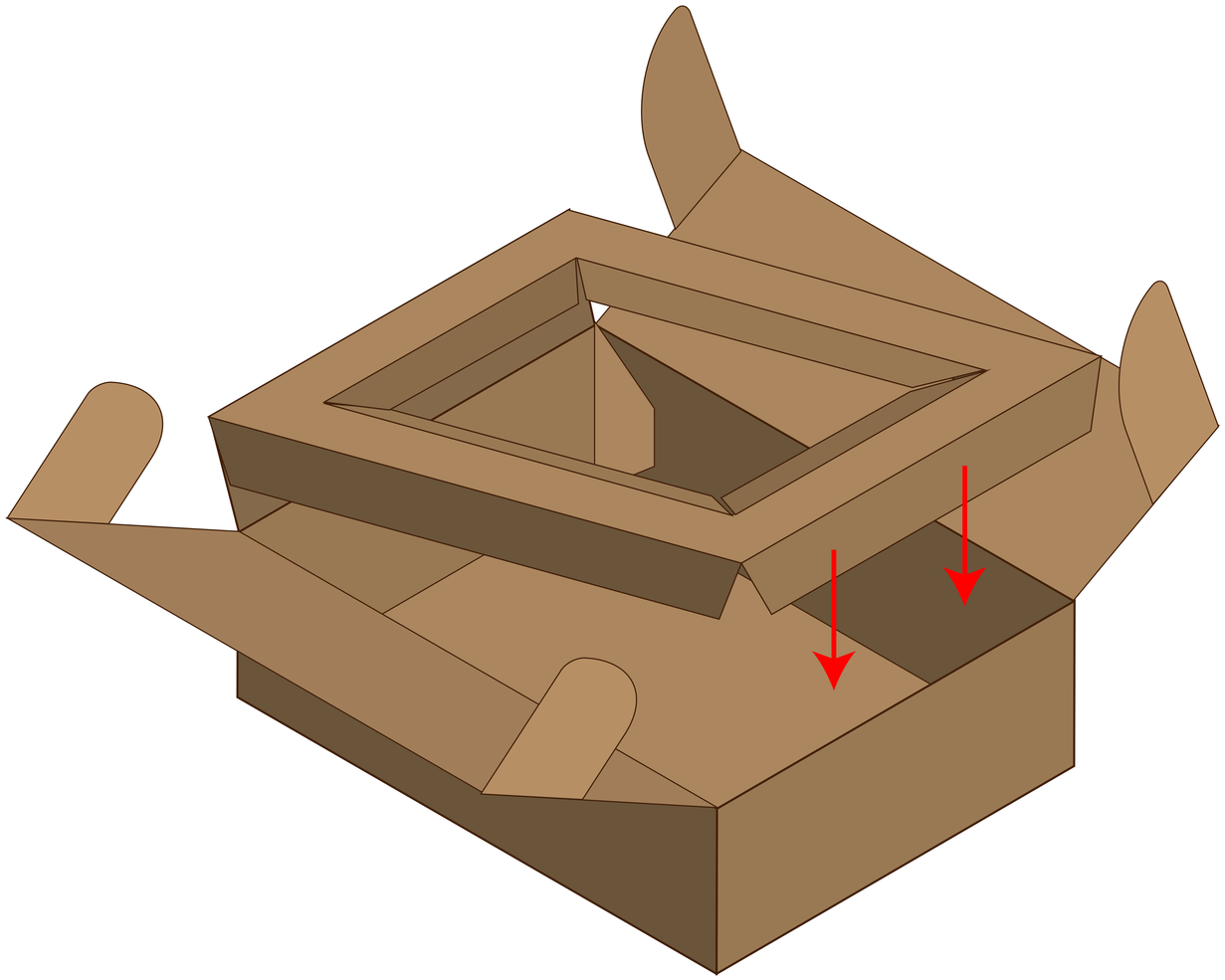

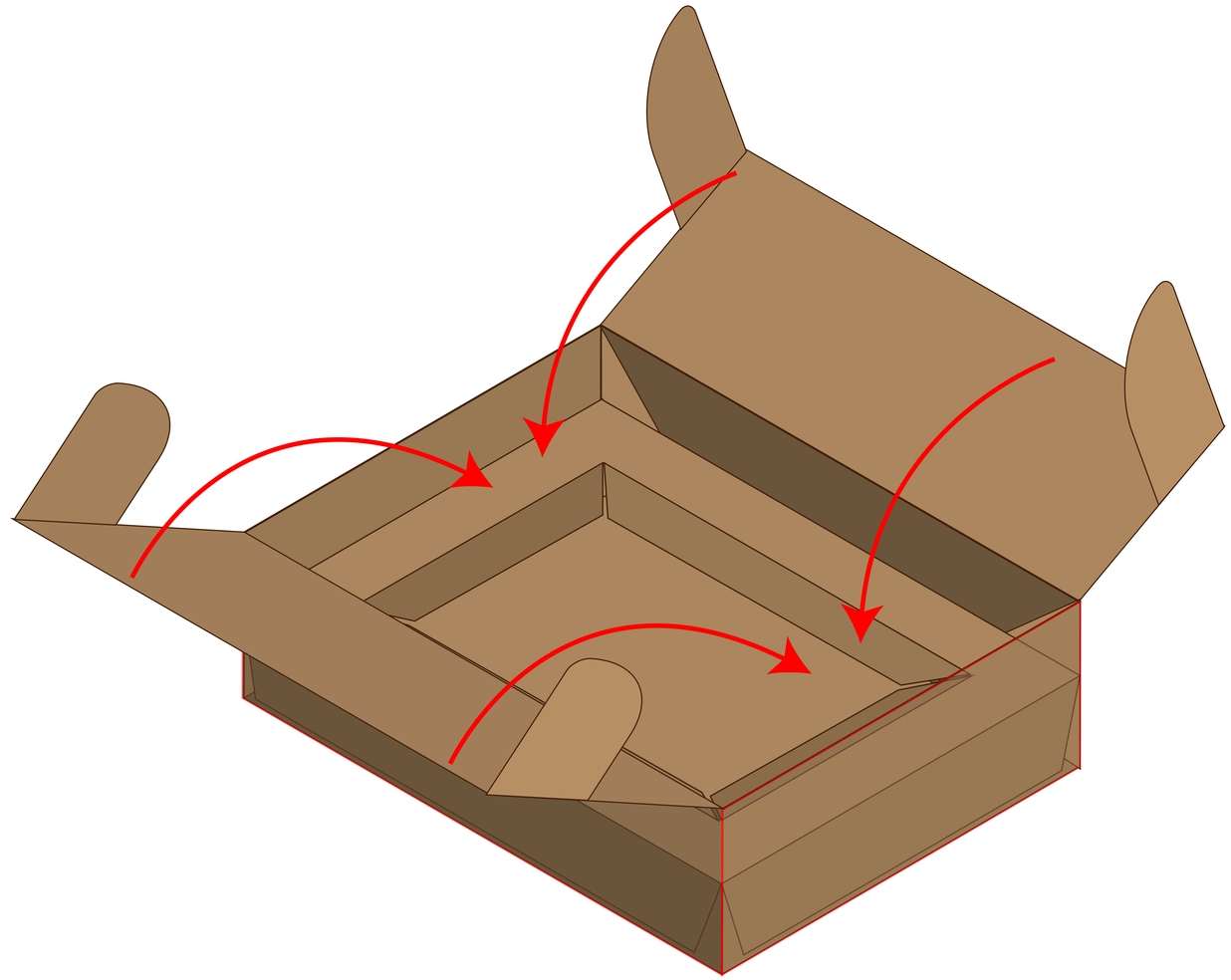

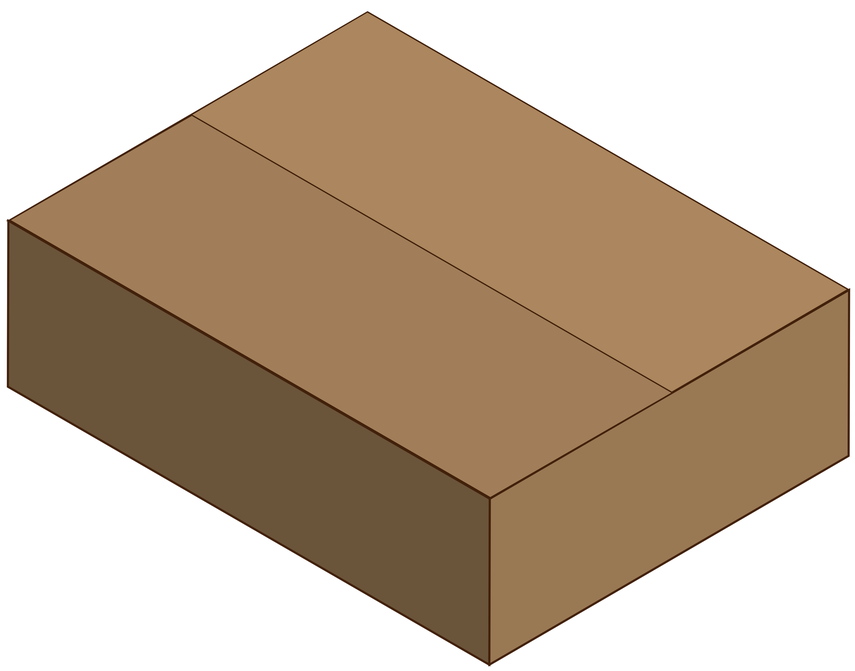

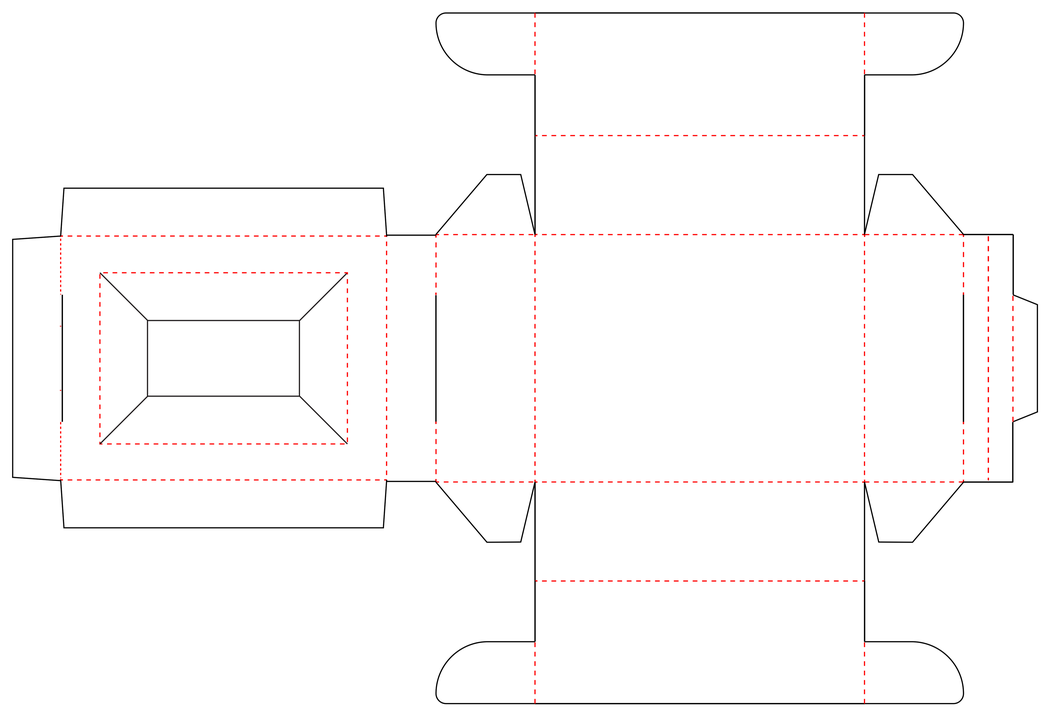

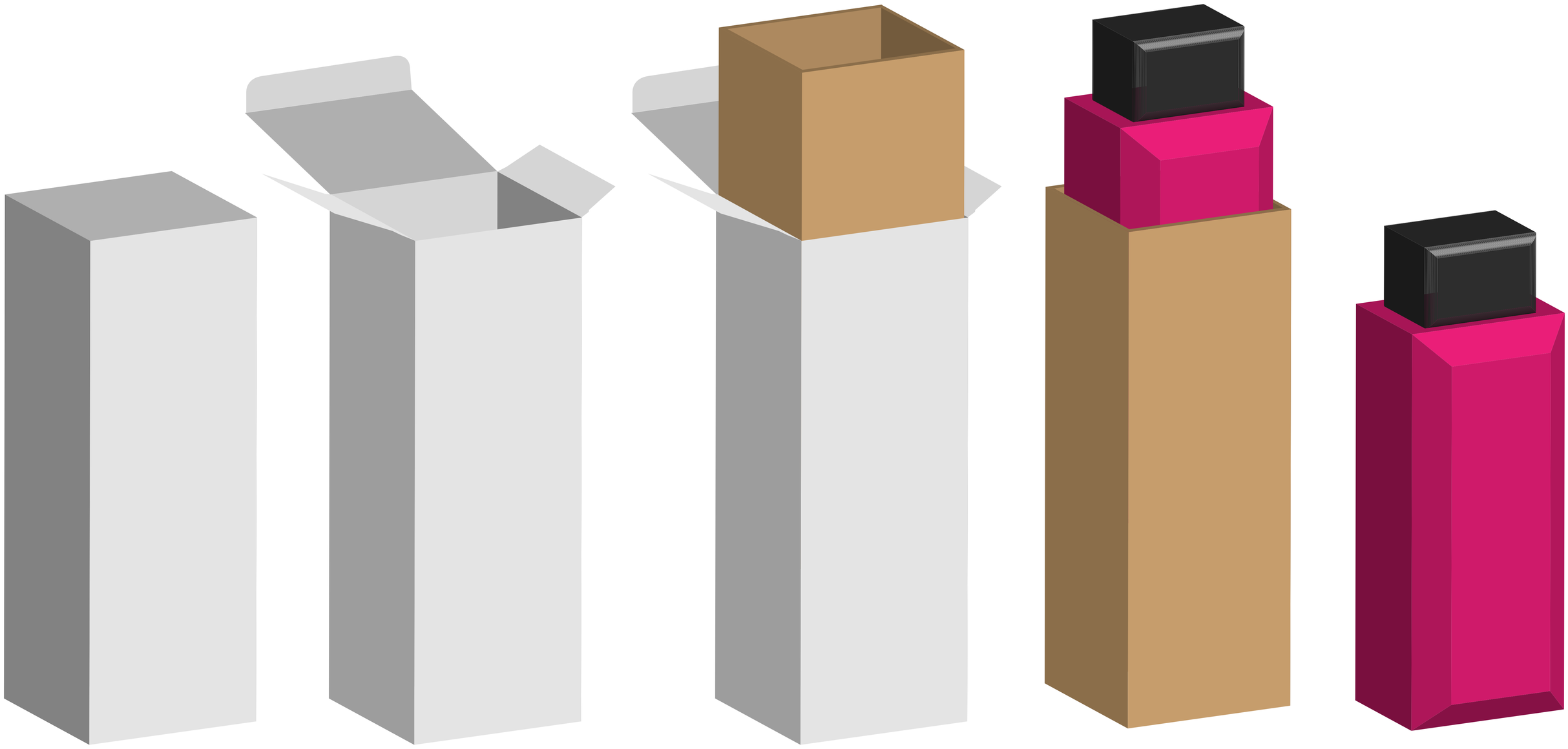

Hard Paper
300-350 gsm

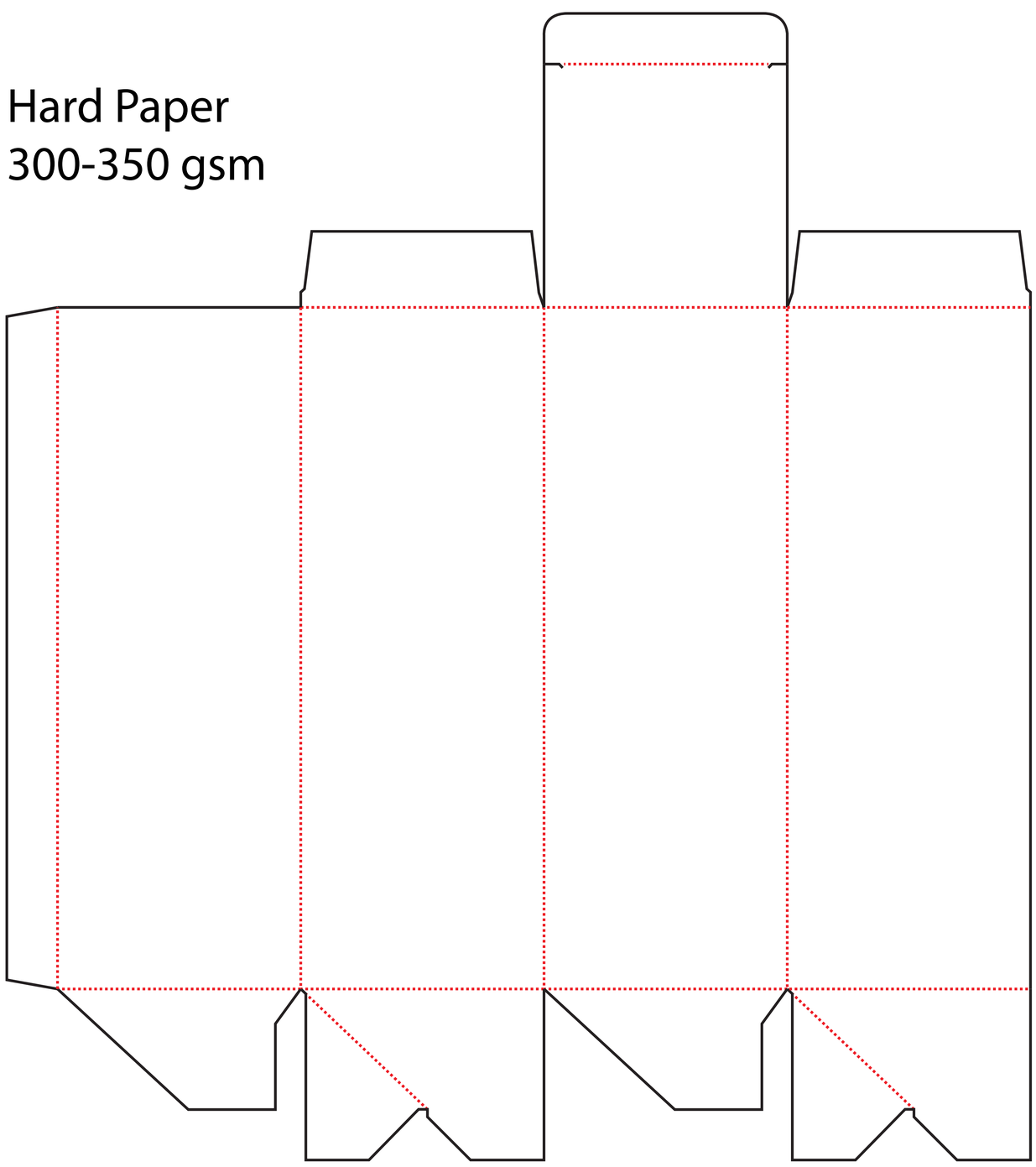

Corrugated Paper
E Flute

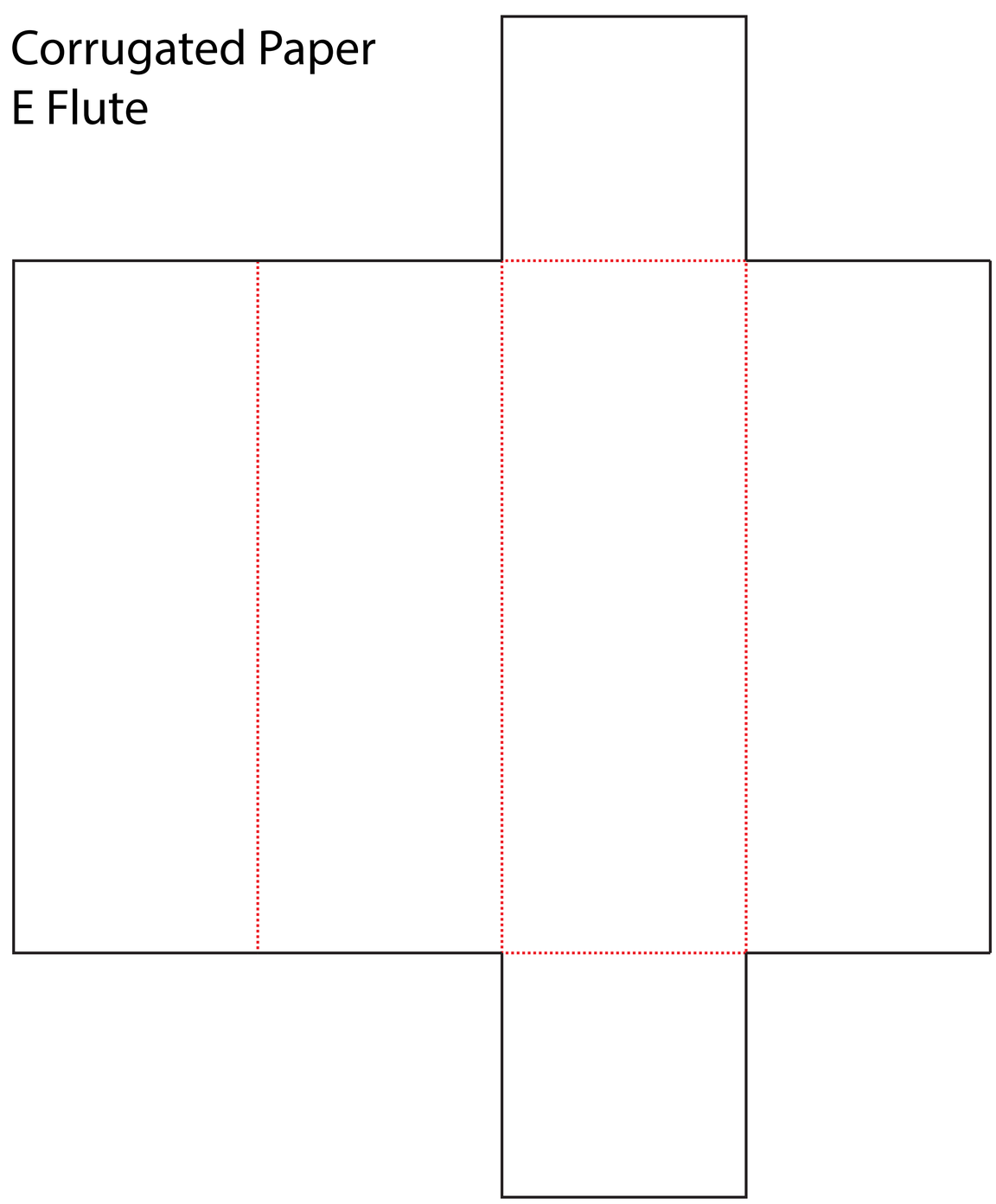

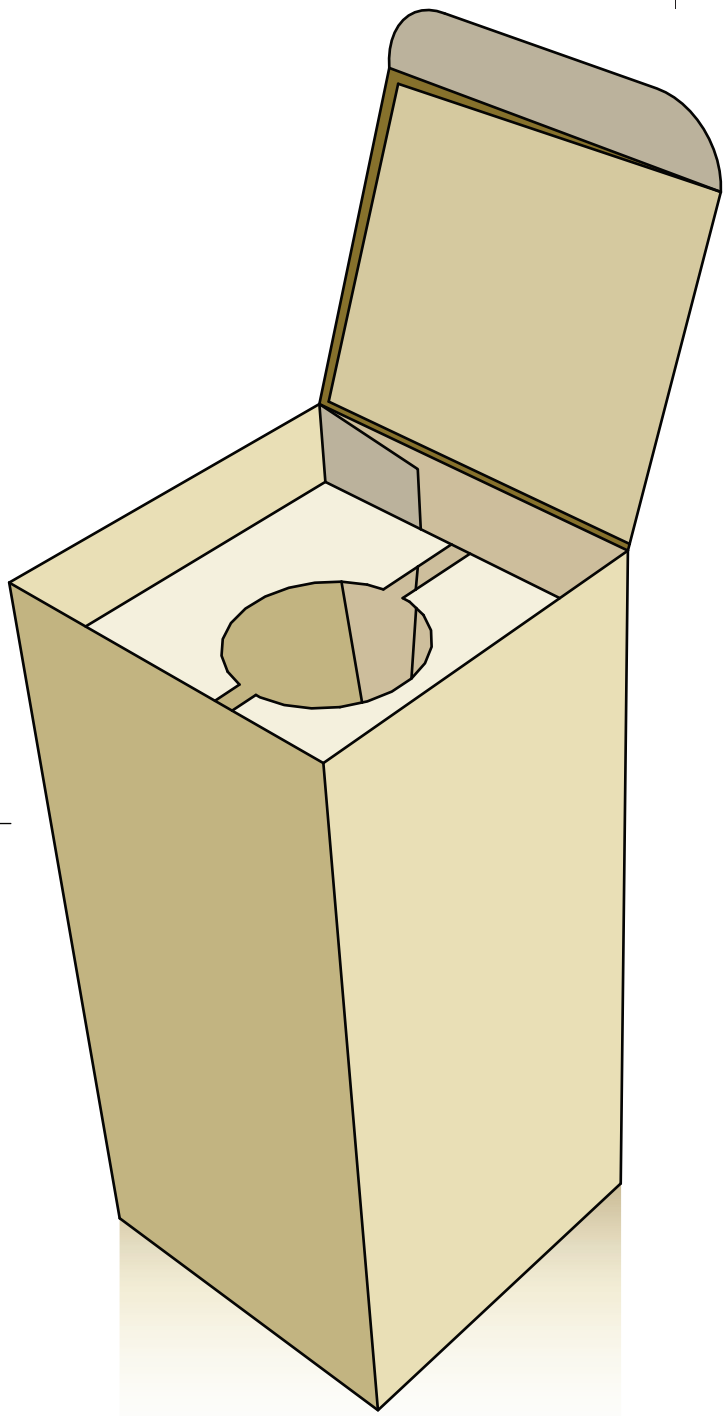

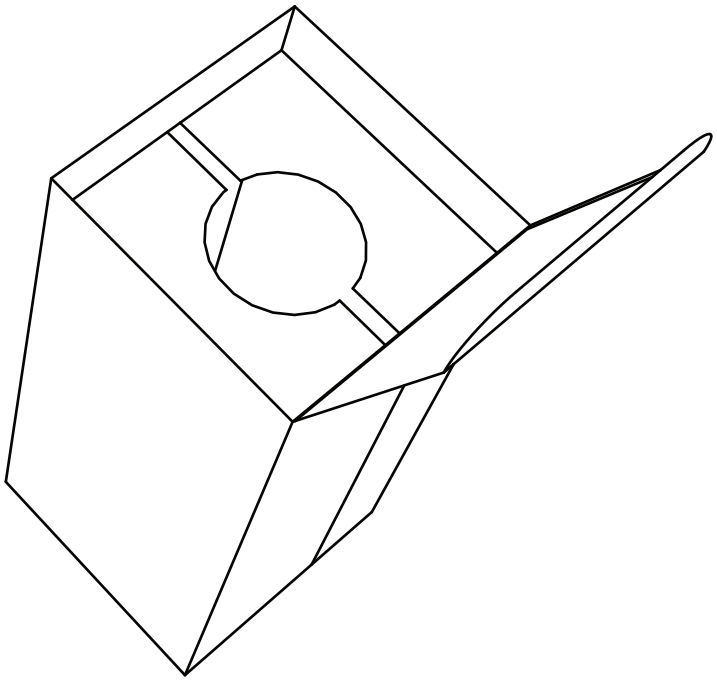

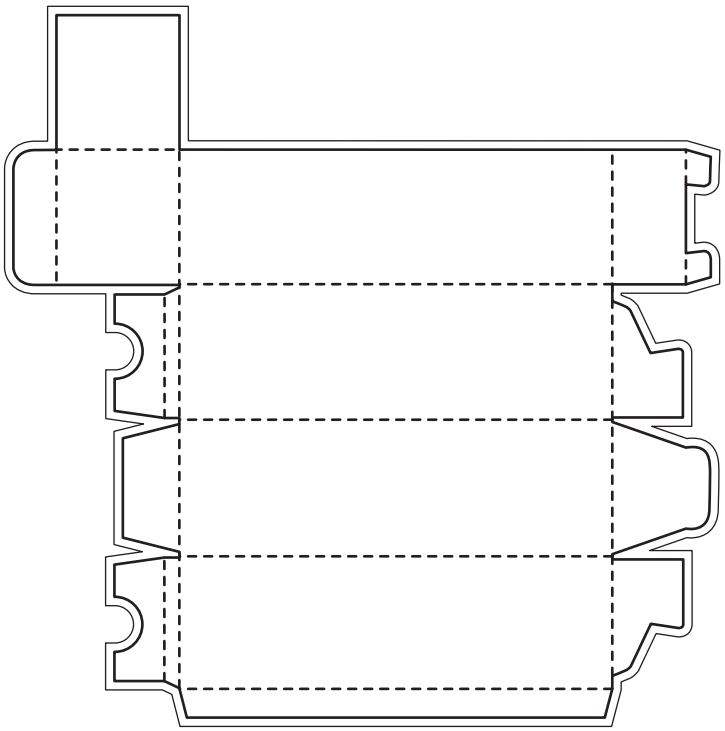

printing bleed

die-cuting line

folding line

perforaion line

zipper line

Logo
Brand
Name

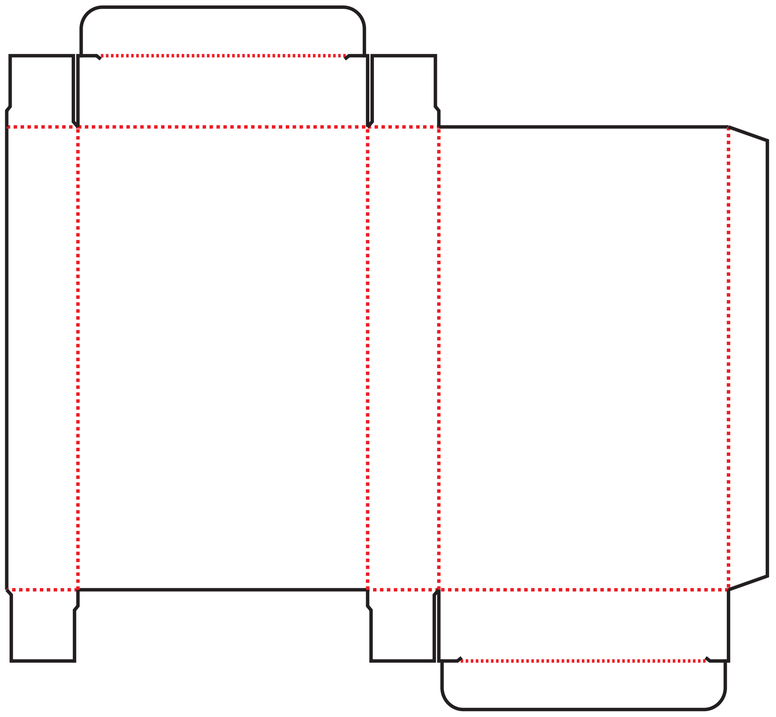

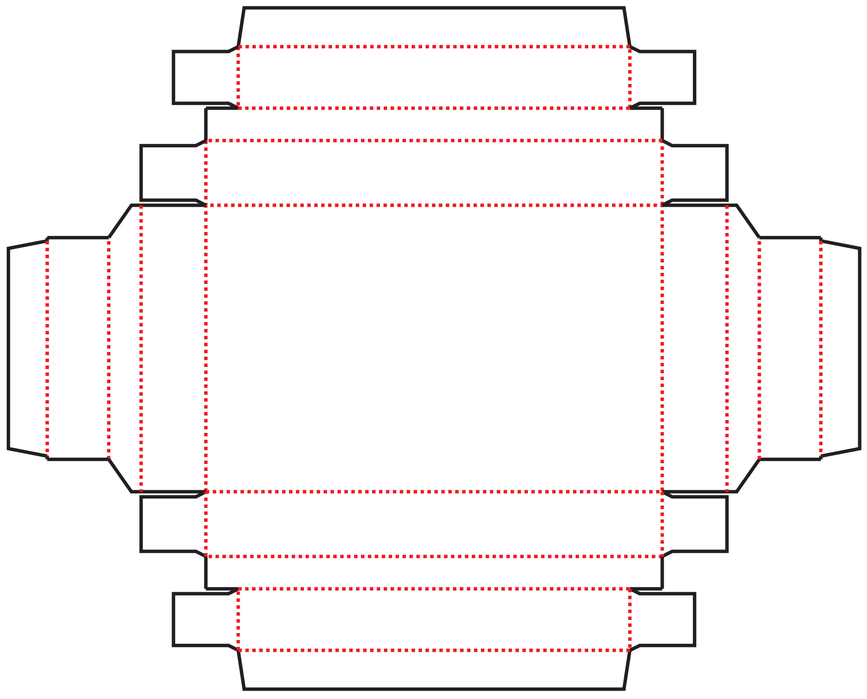

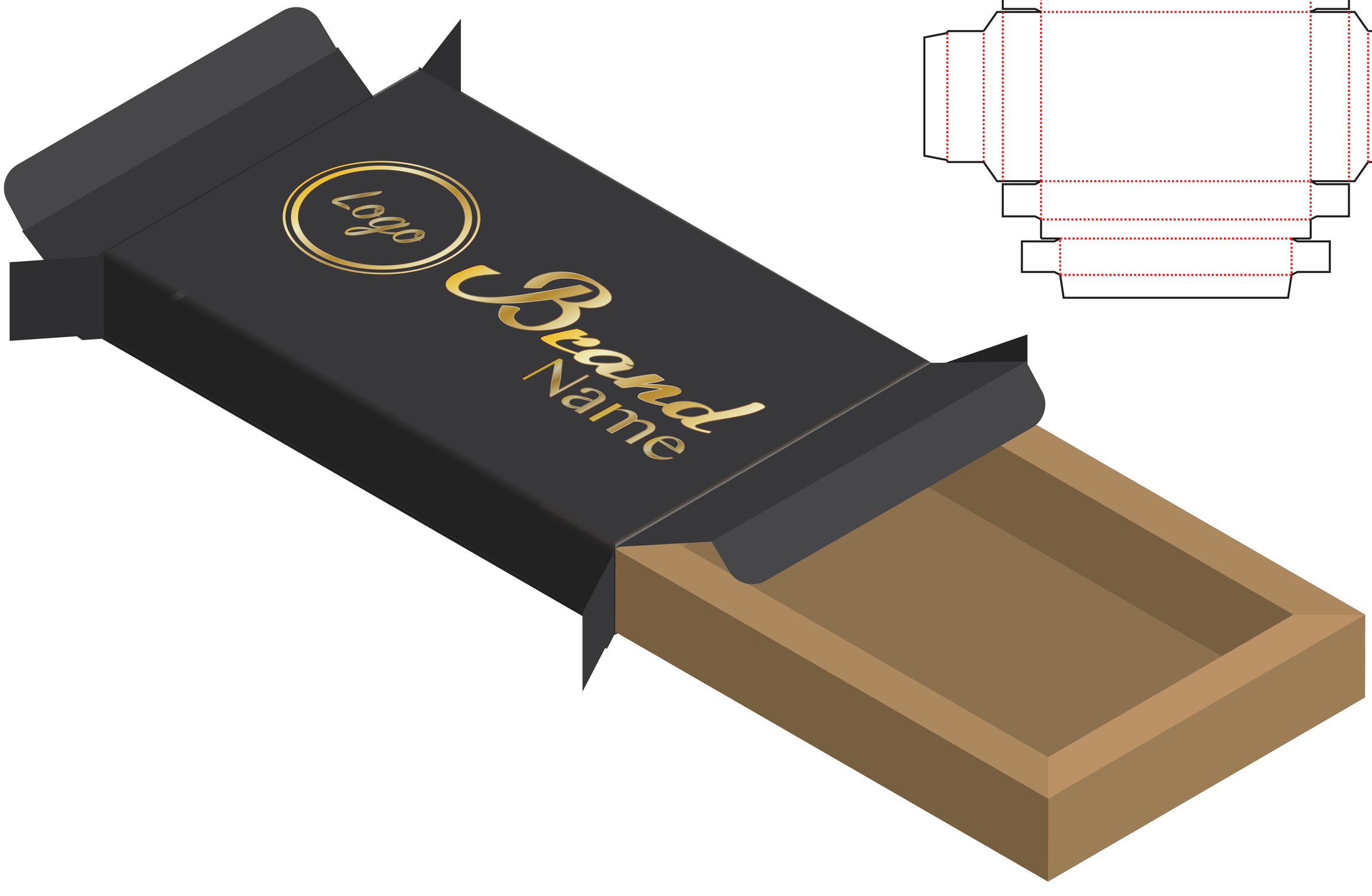
Logo
Brand
Name

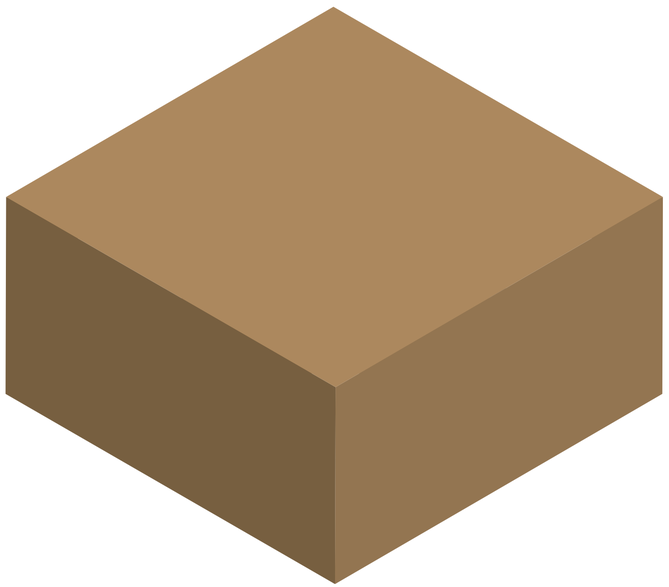

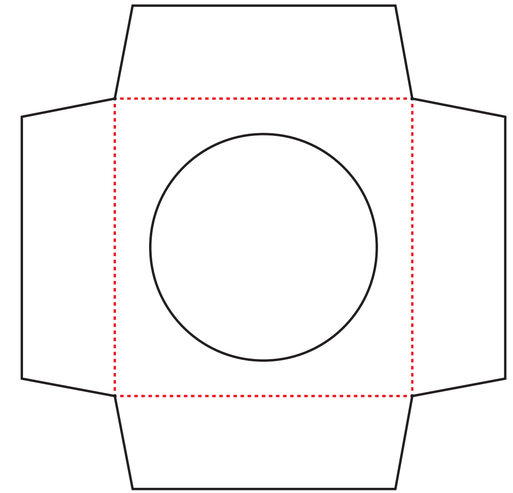

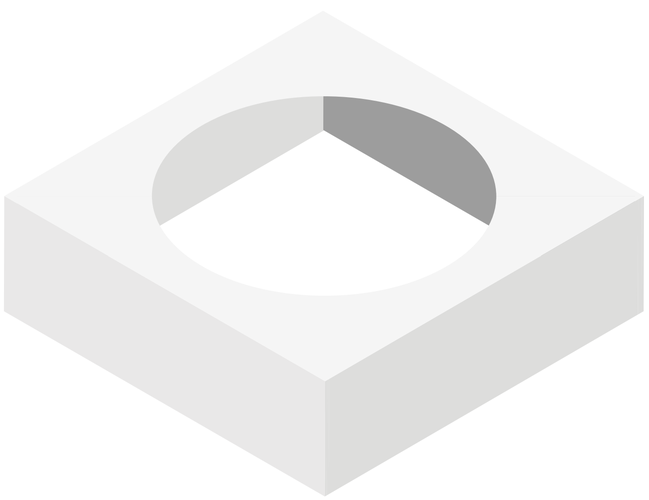

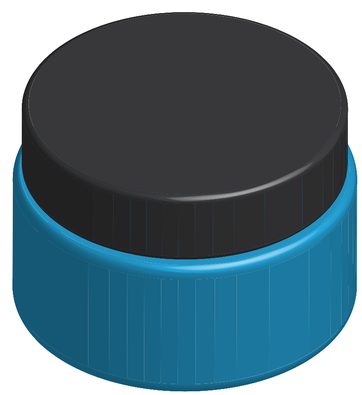

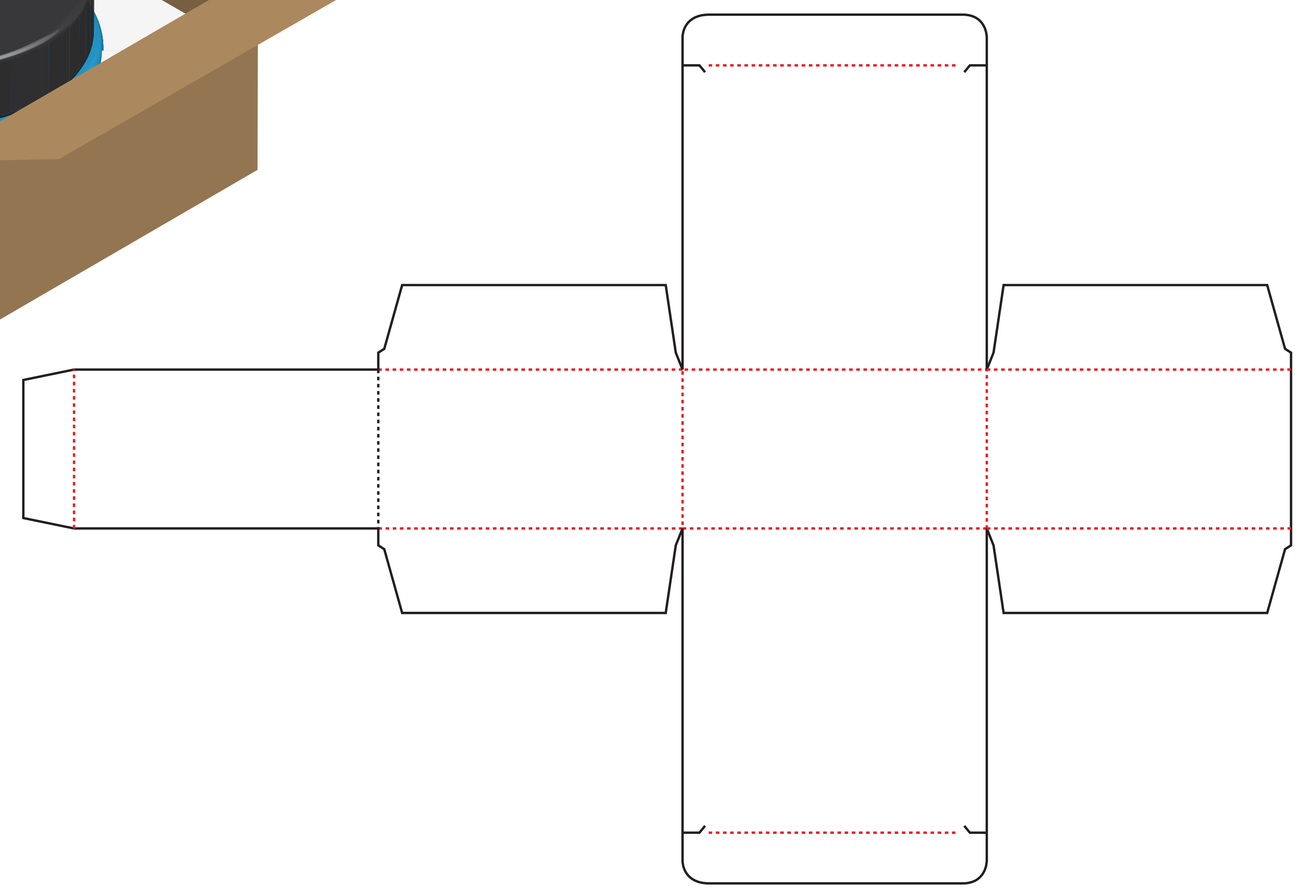

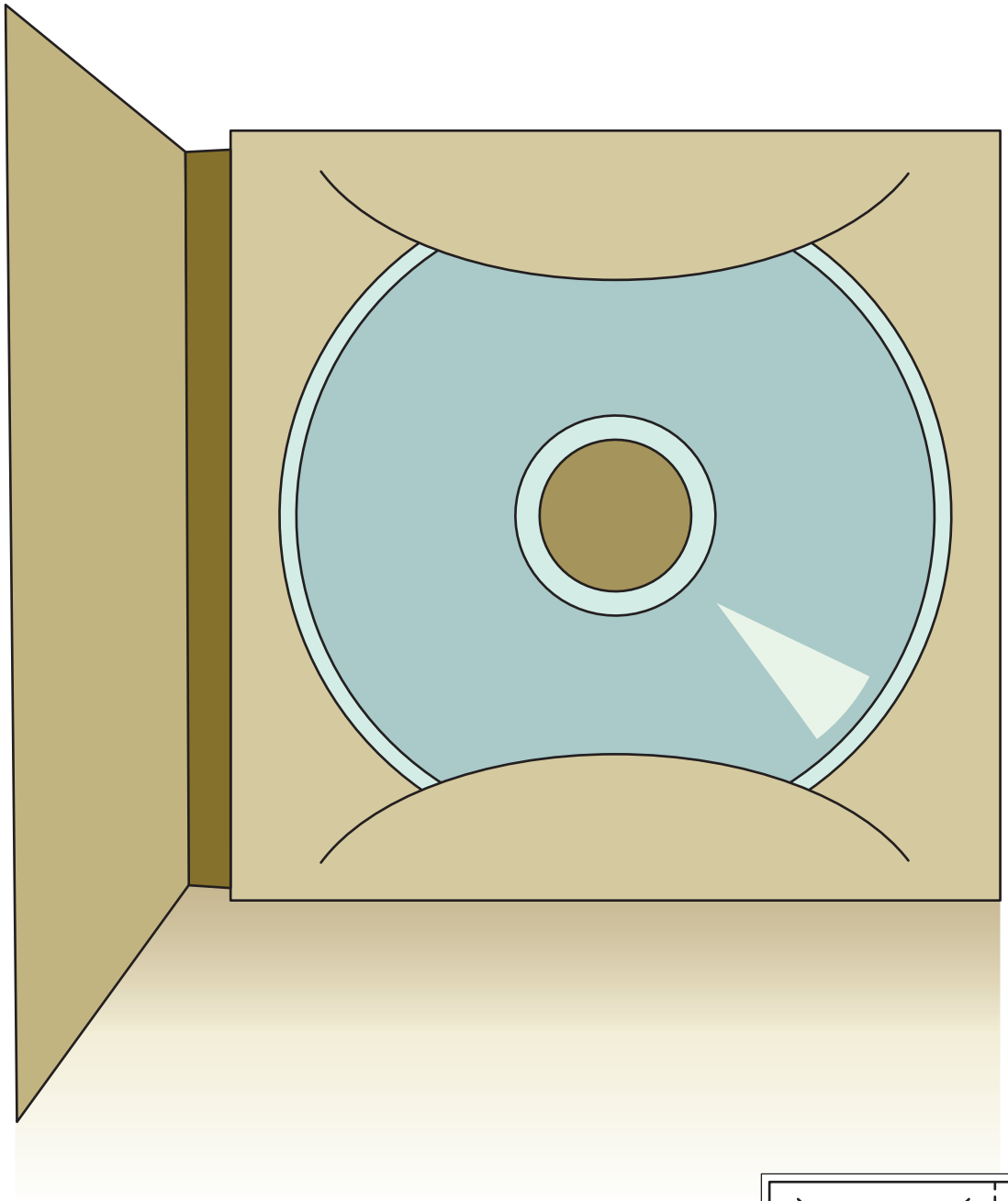

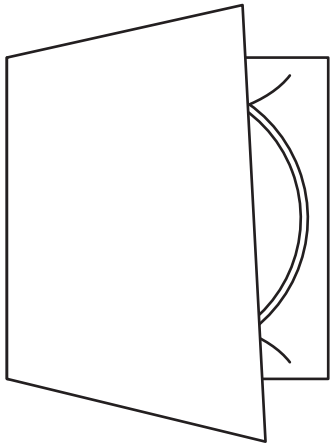

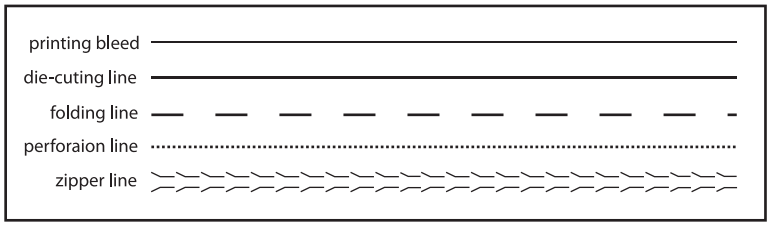
printing bleed
die-cuting line
folding line
perforaion line
zipper line

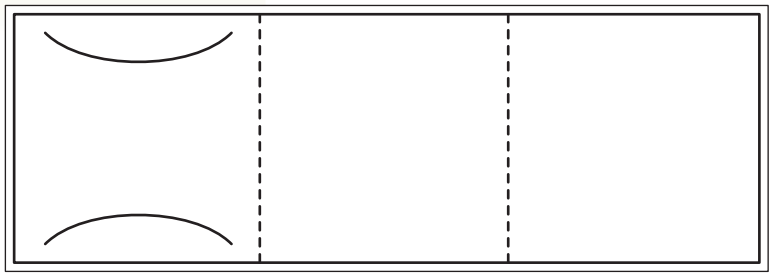

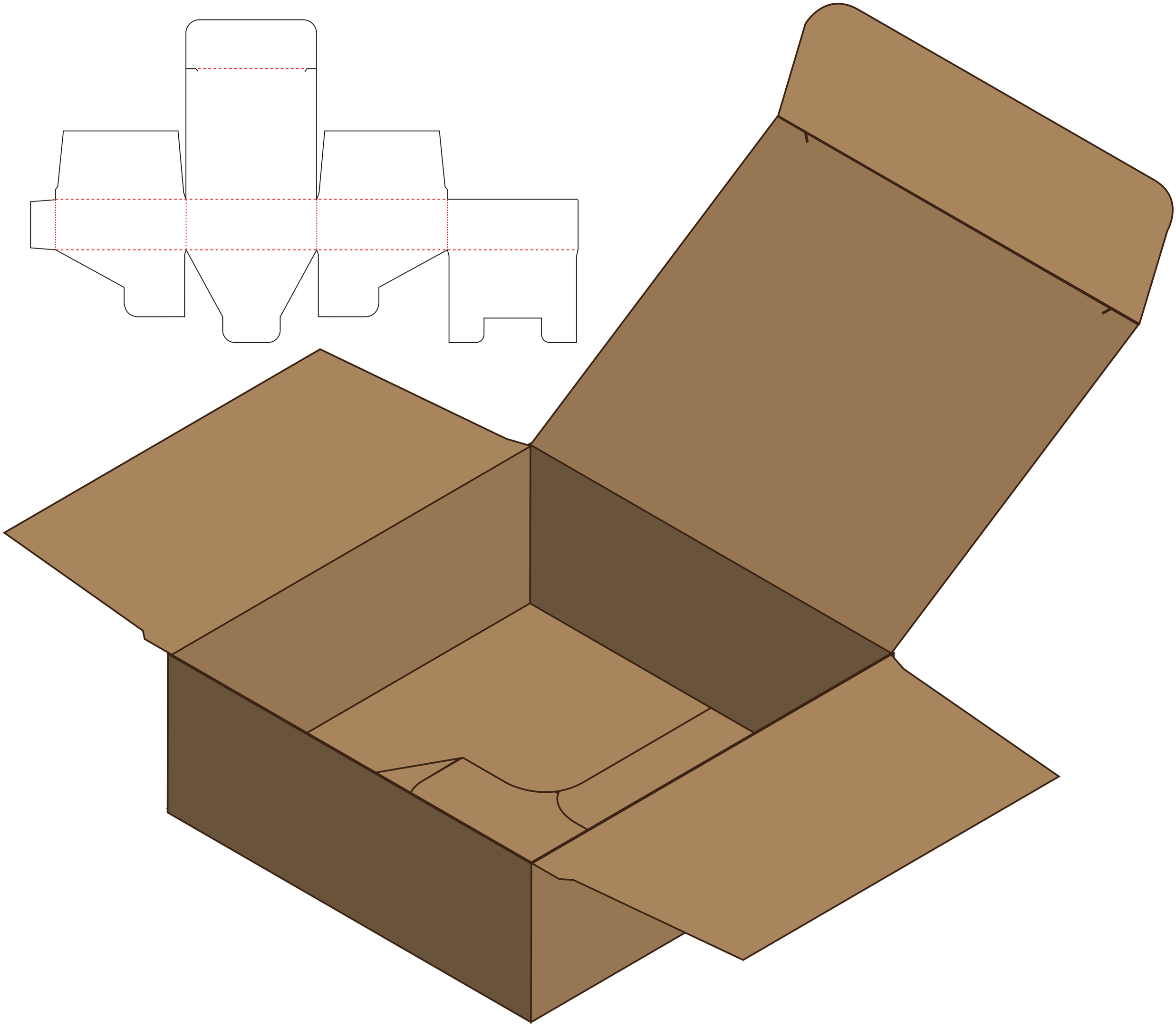

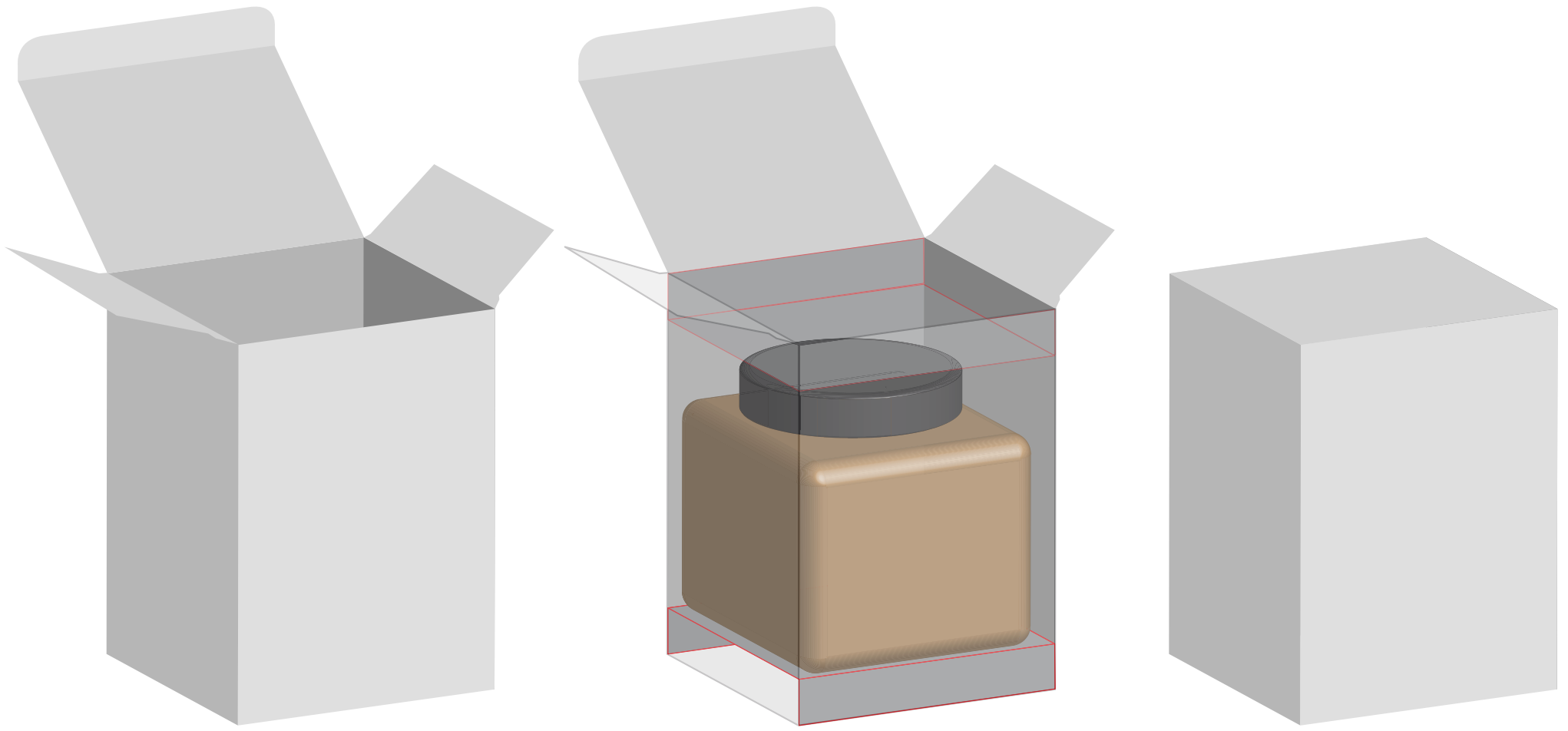

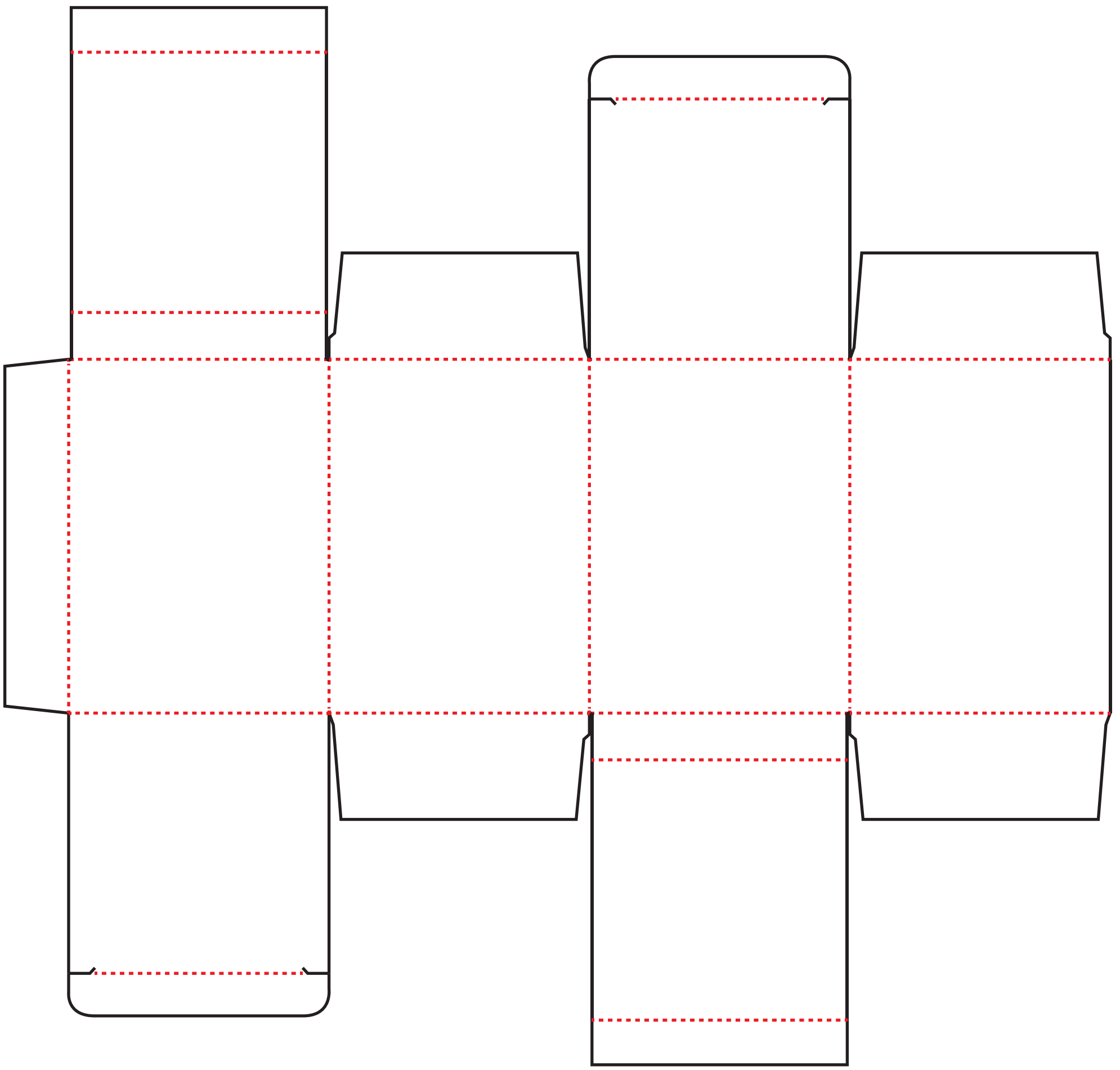

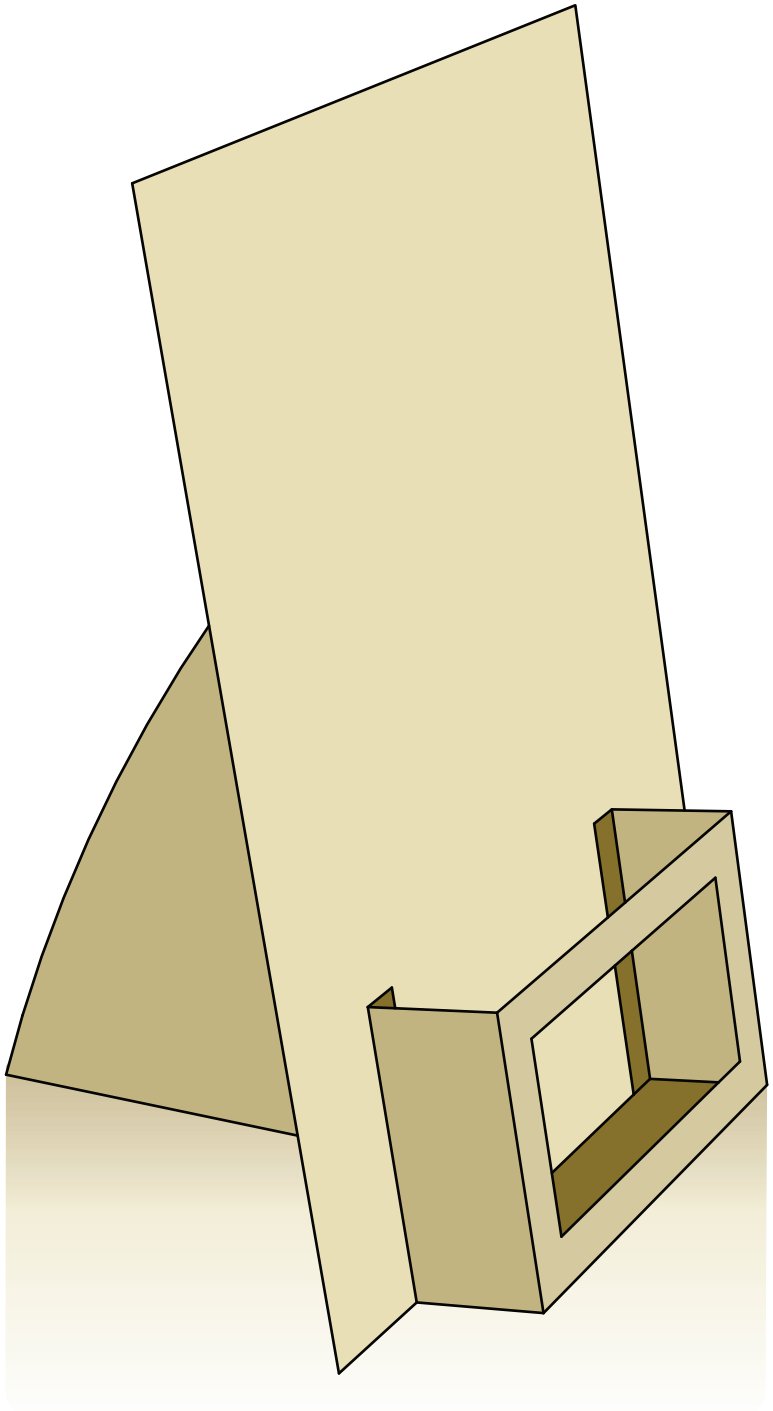

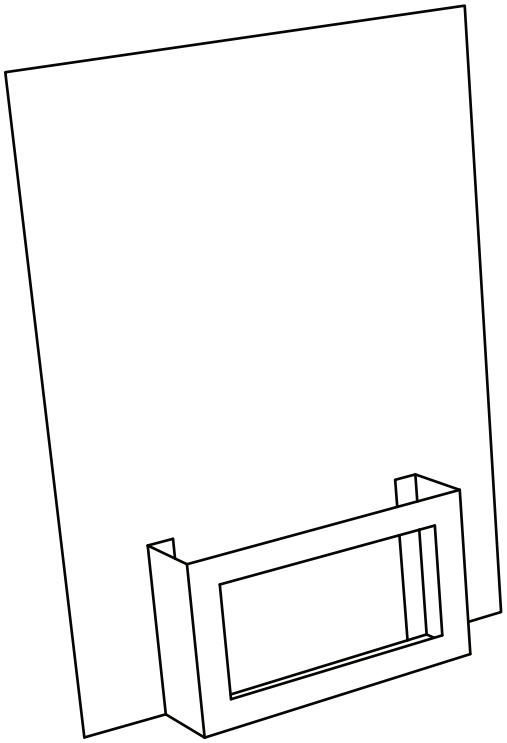

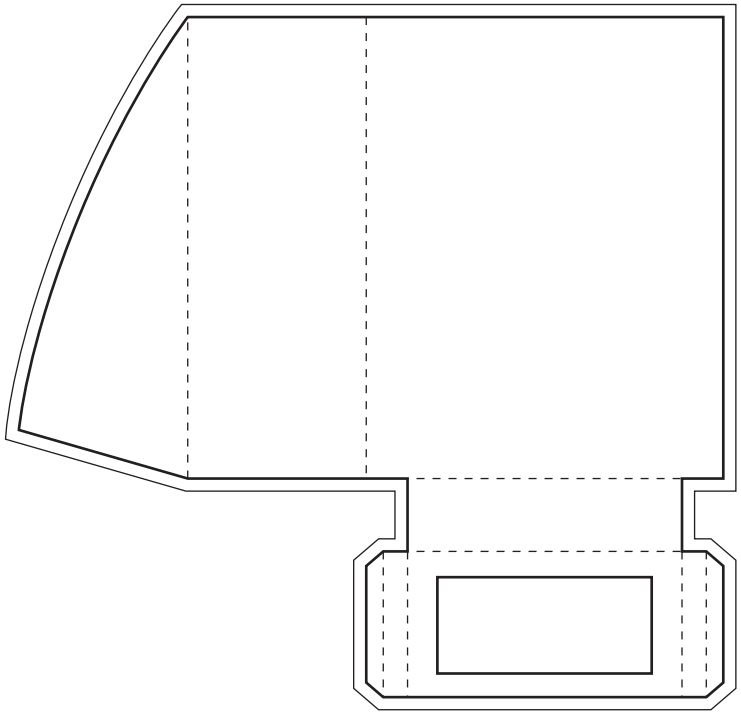

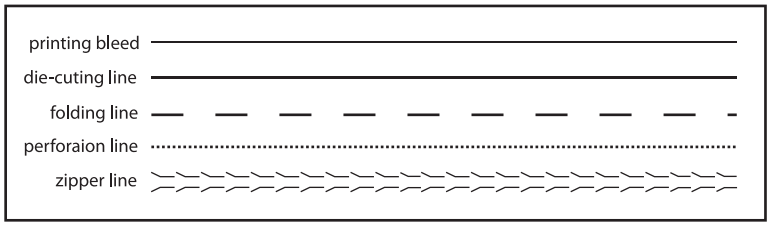
printing bleed
die-cuting line
folding line
perforaion line
zipper line

Transparent Plastic Sheet
150 micron

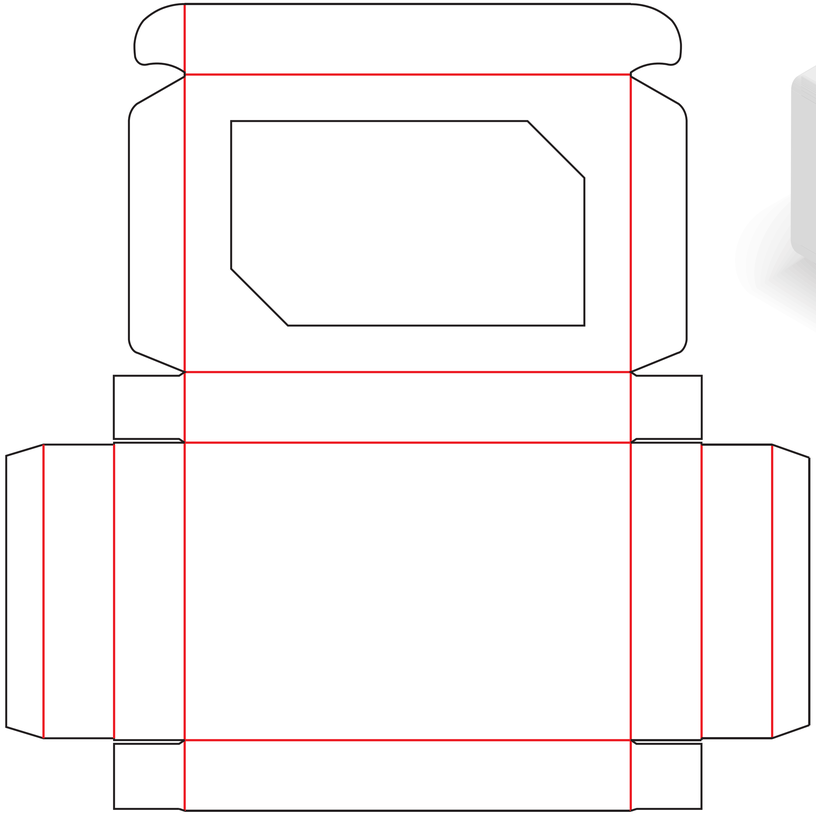
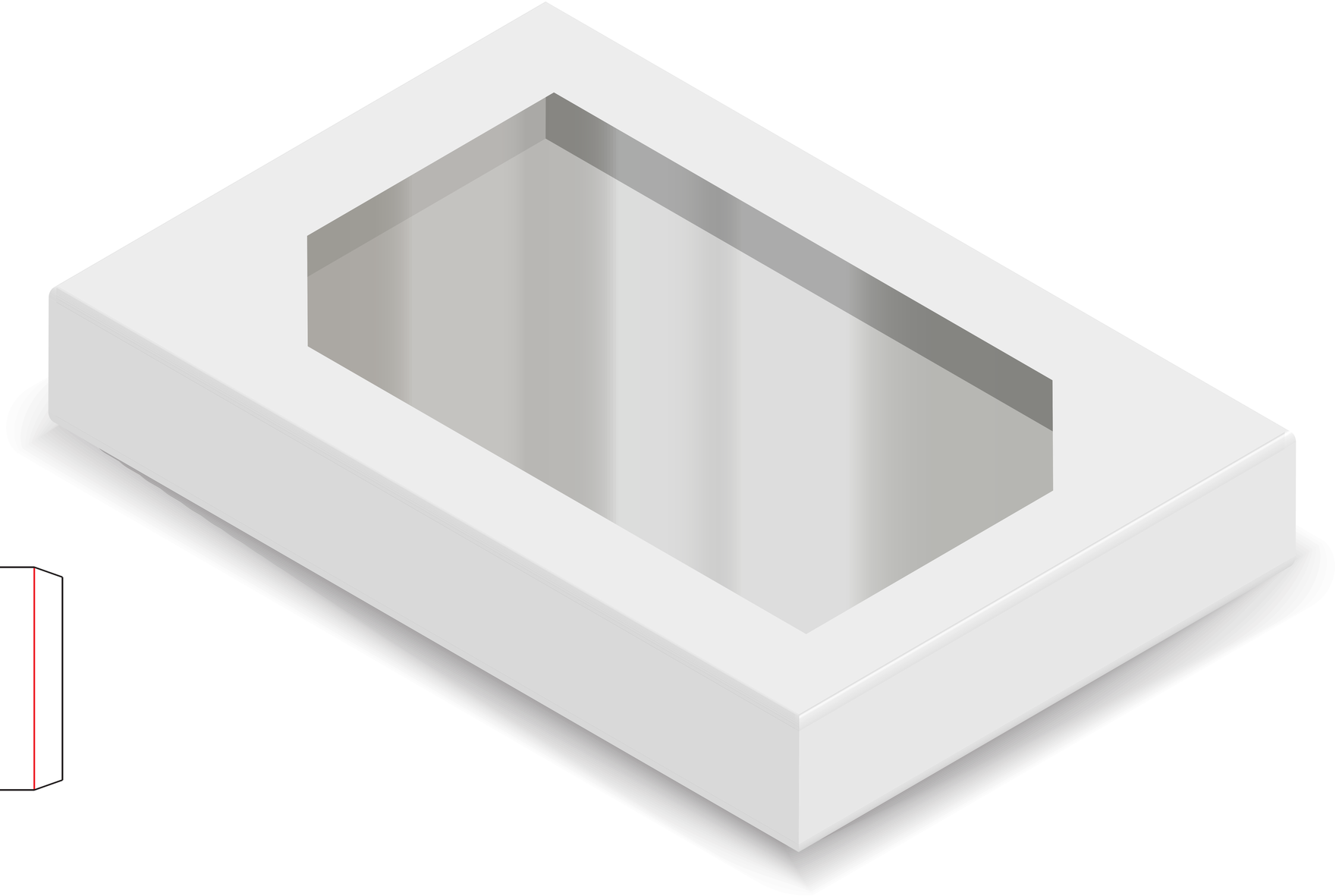
Hard Paper 300-350 gsm