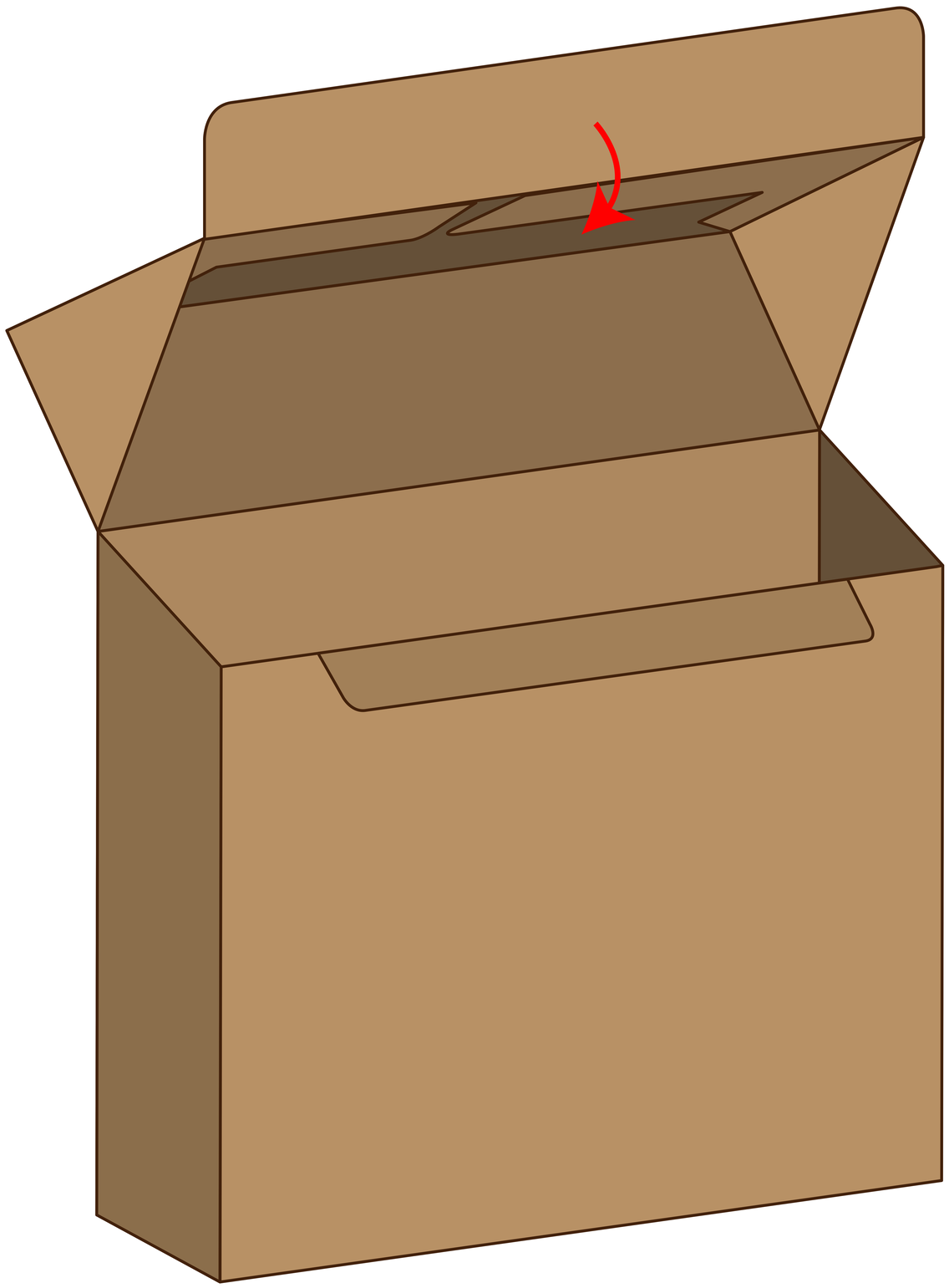

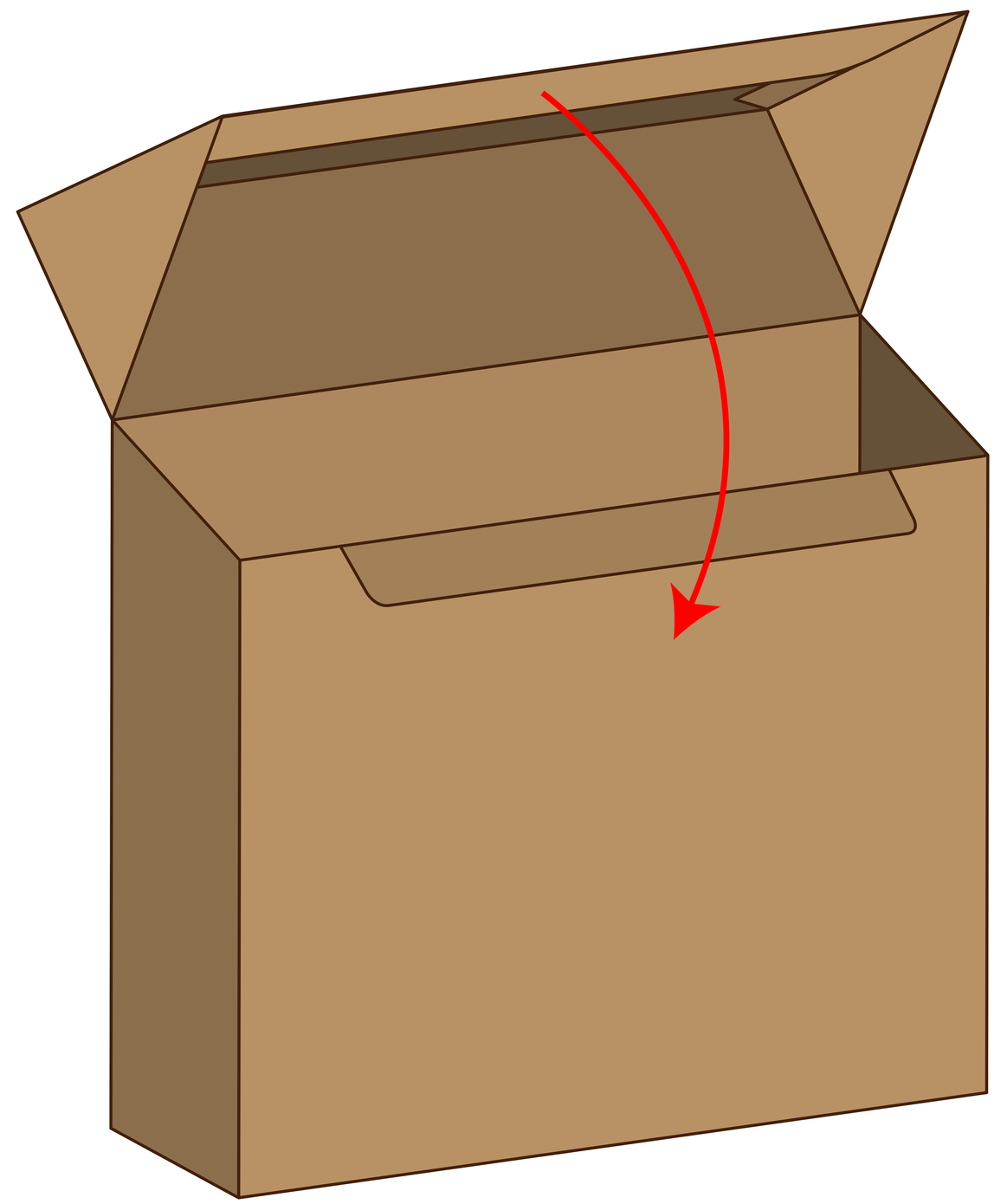

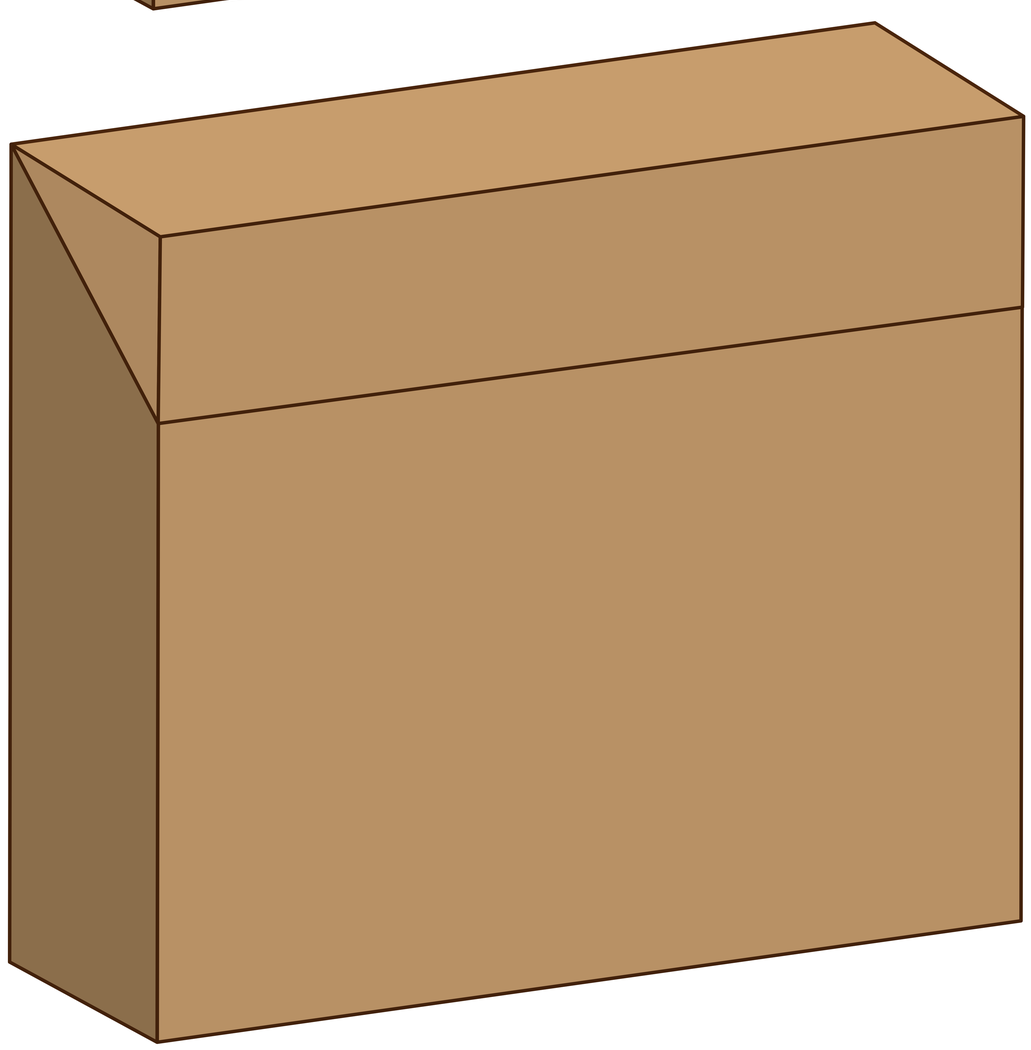

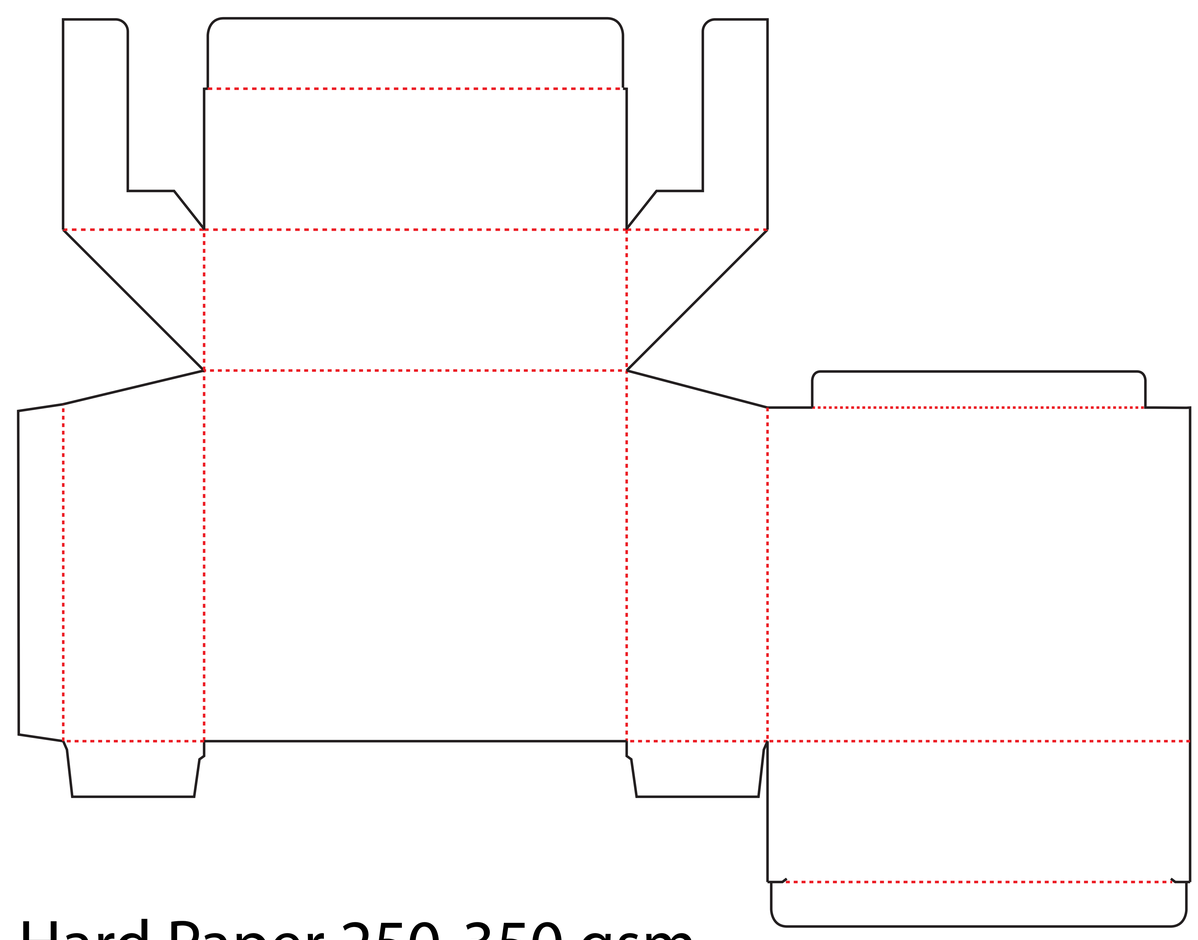

Hard Paper 250-350 gsm

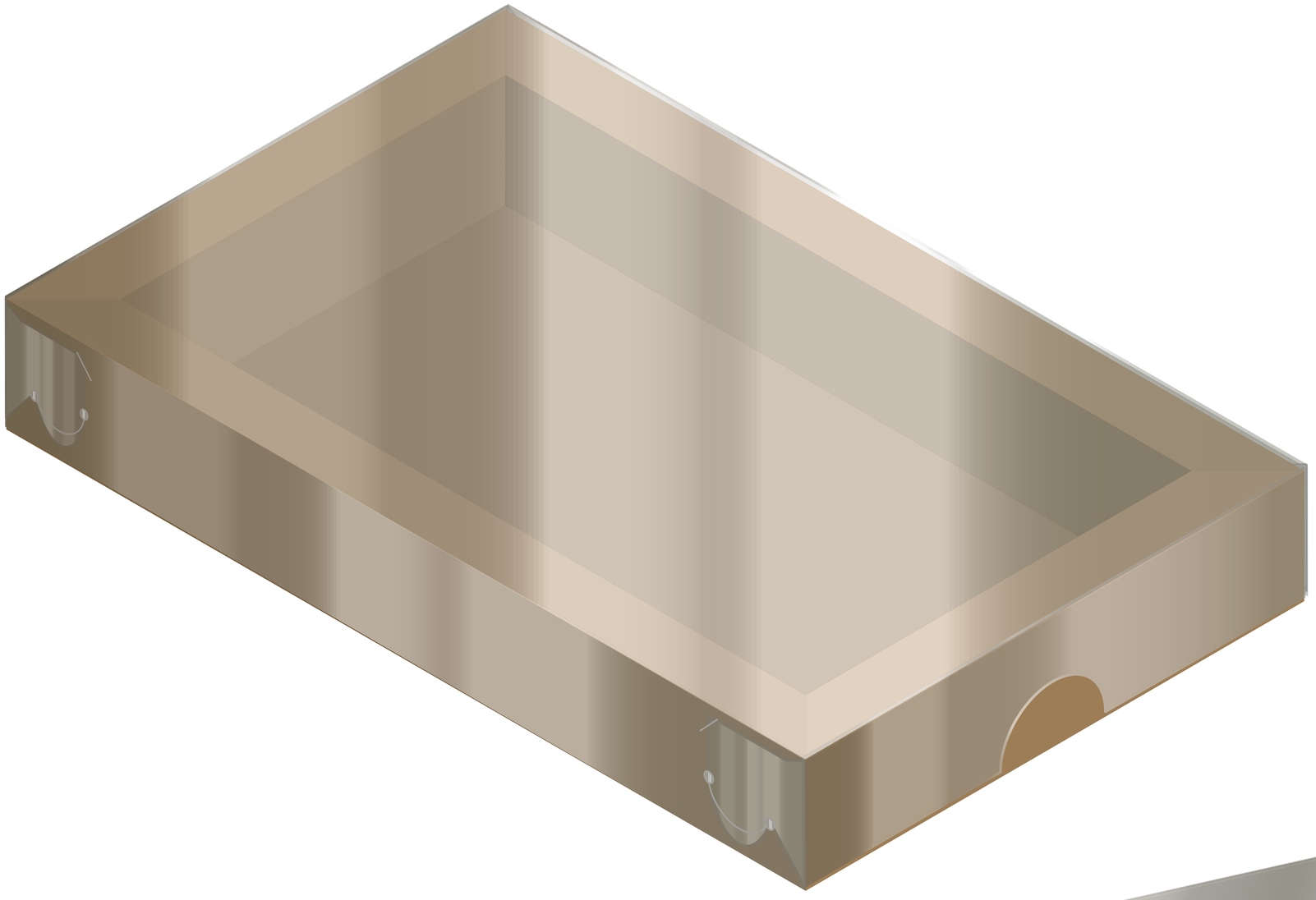

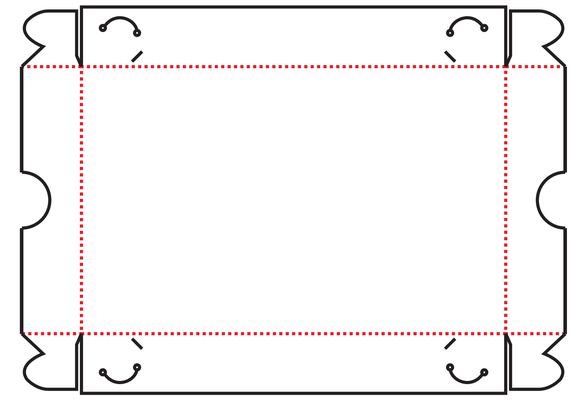

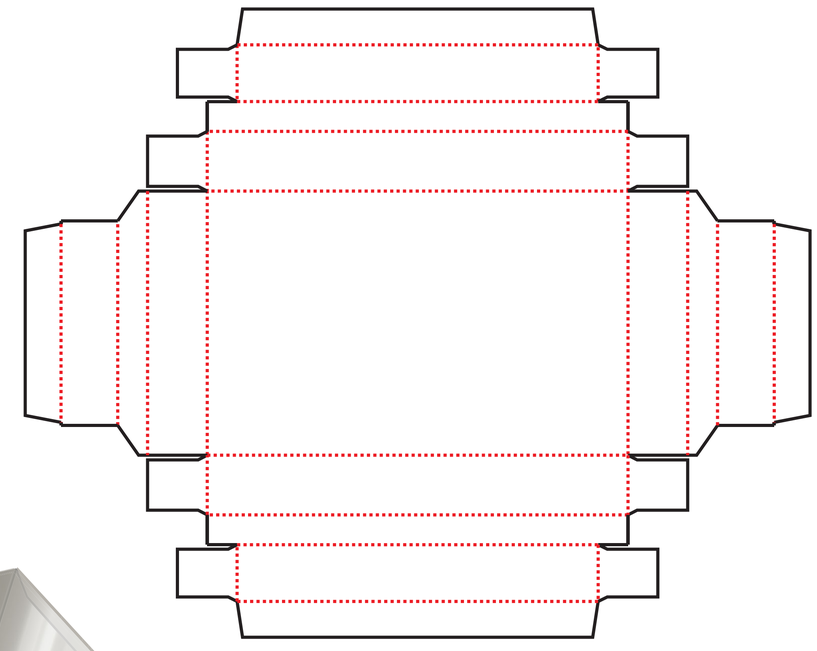

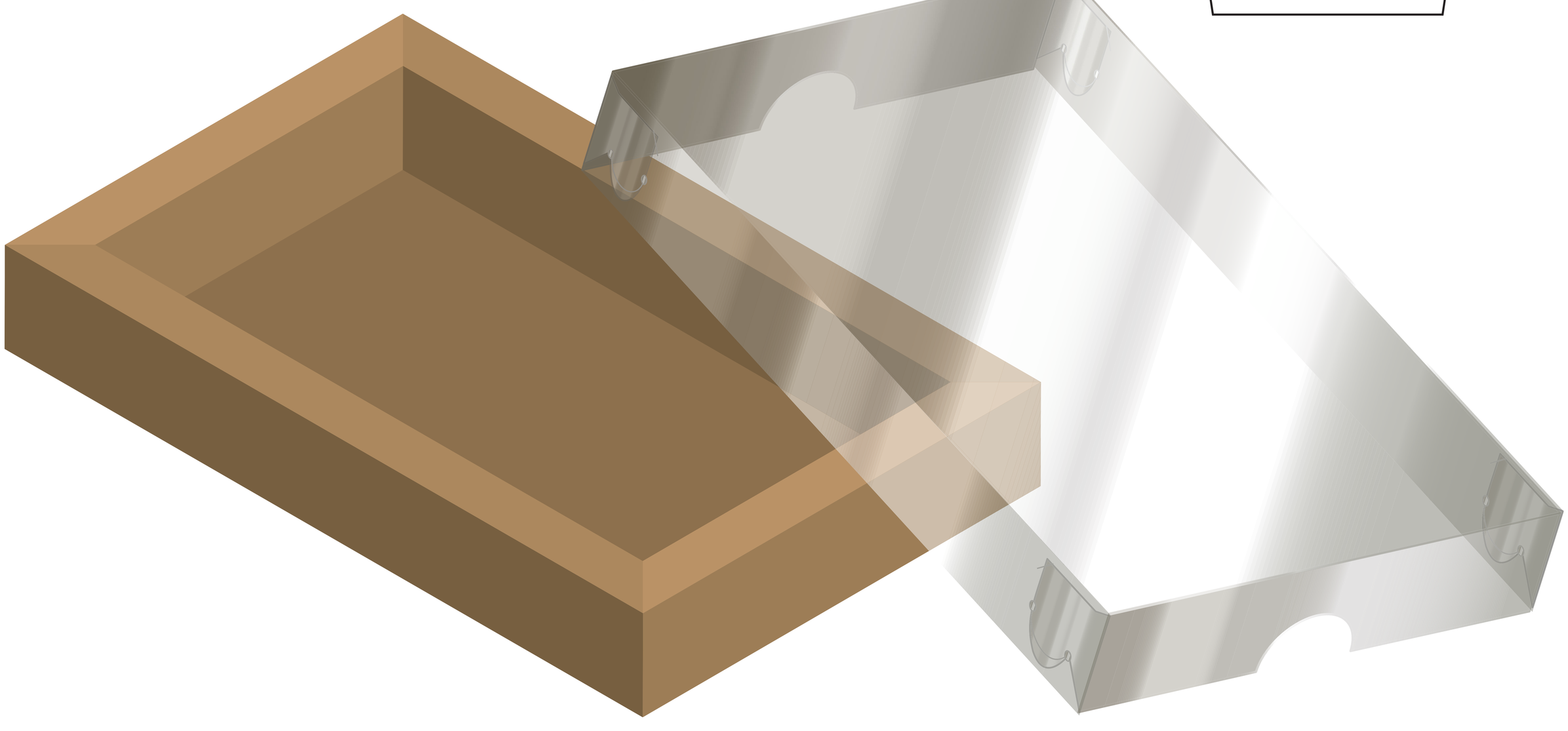

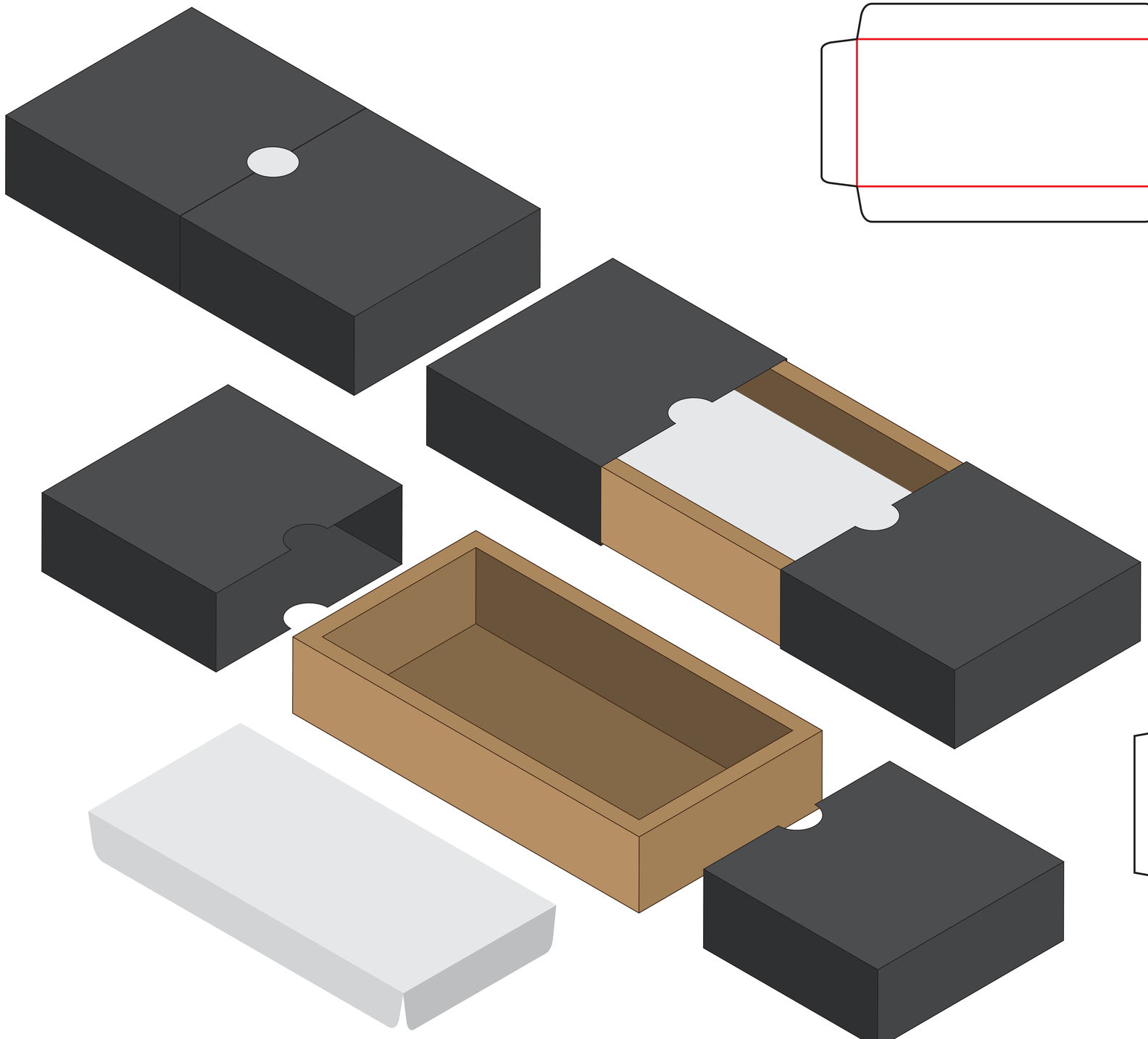

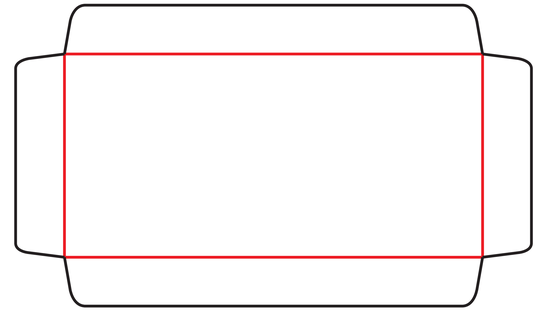

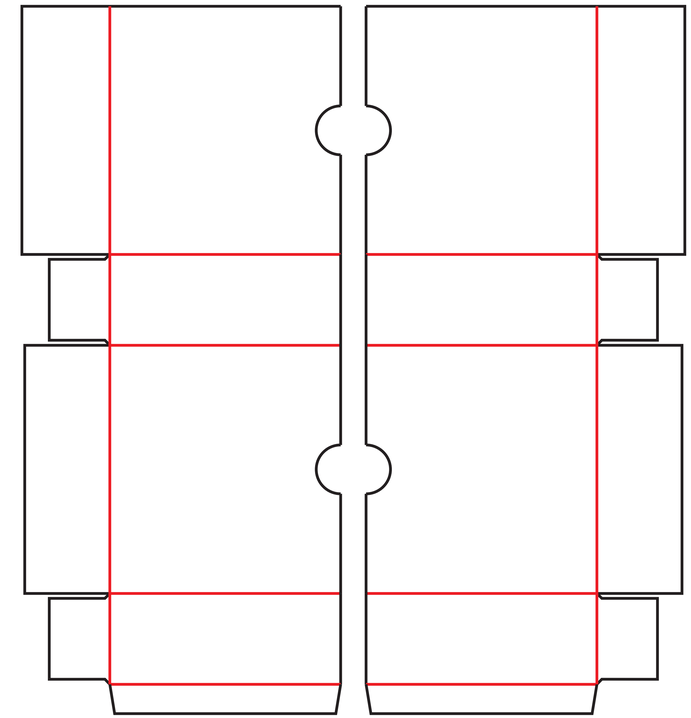

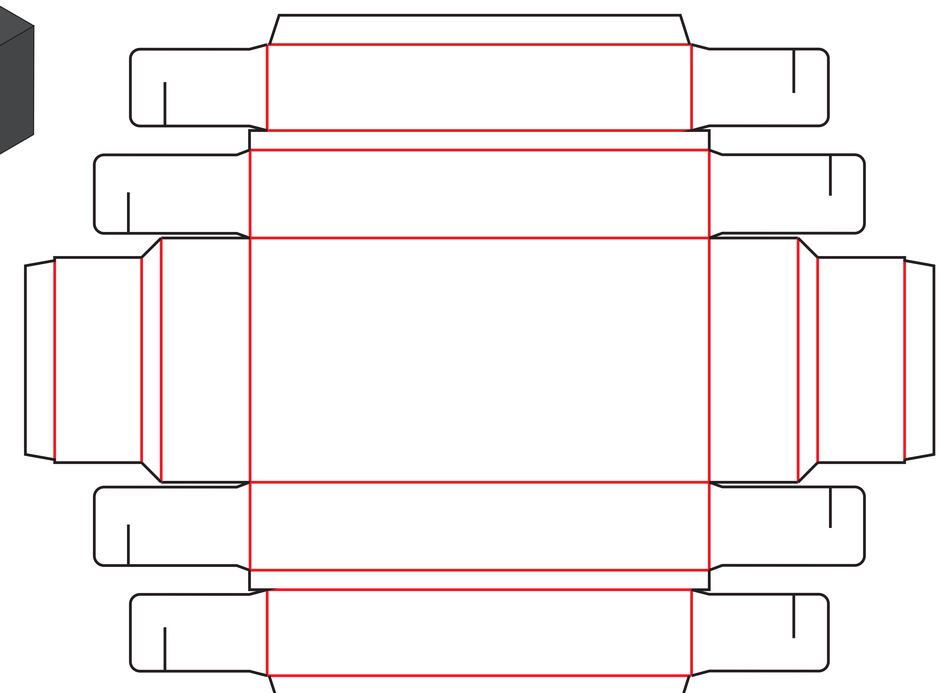

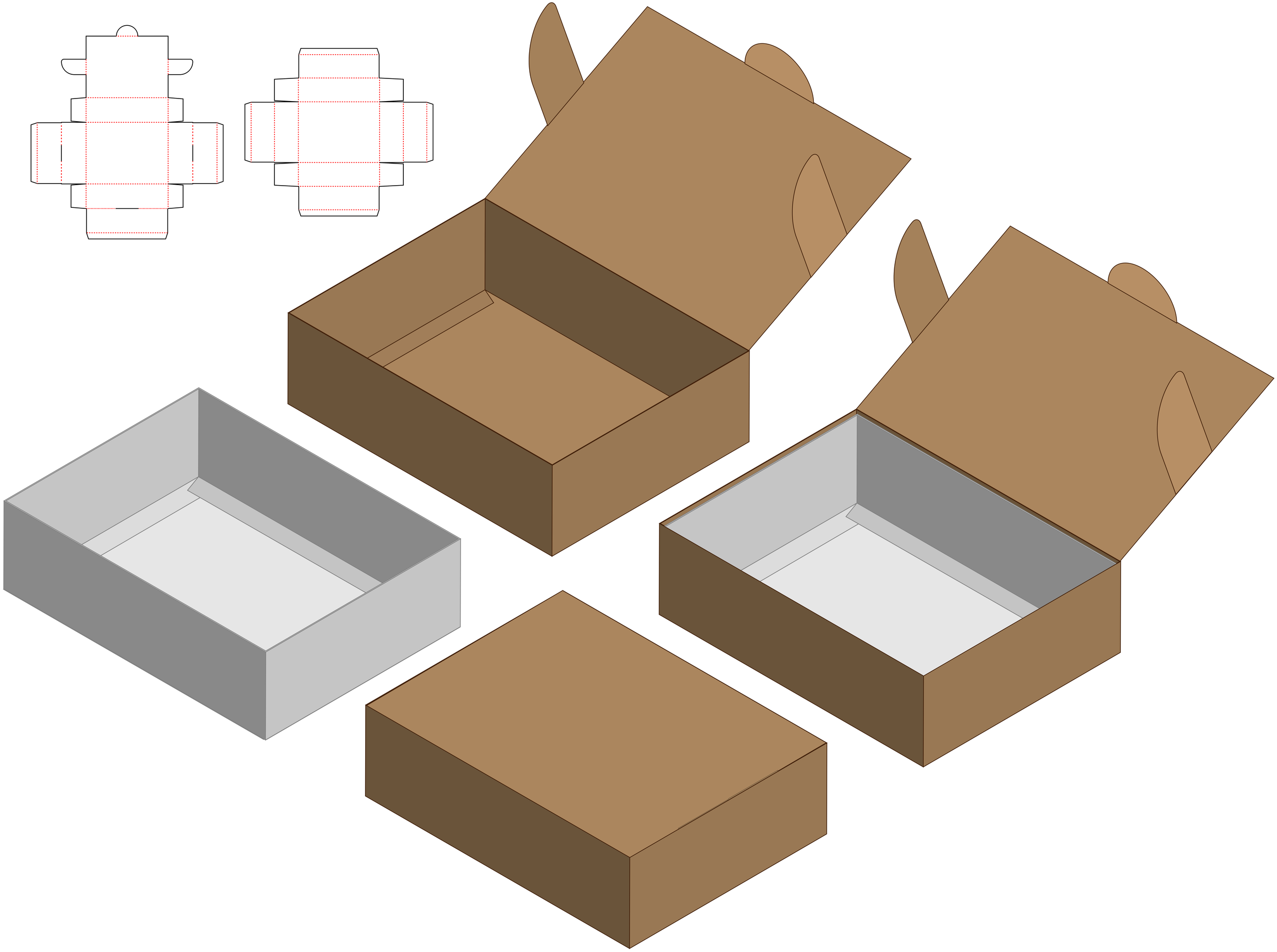

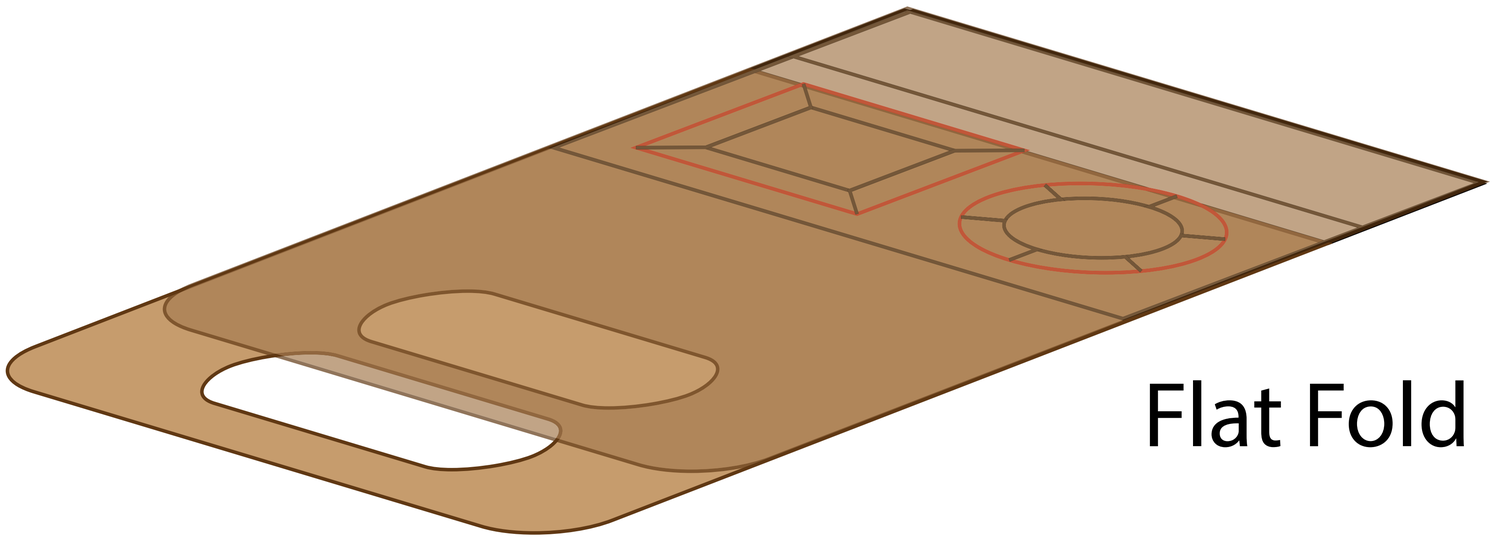

Flat Fold

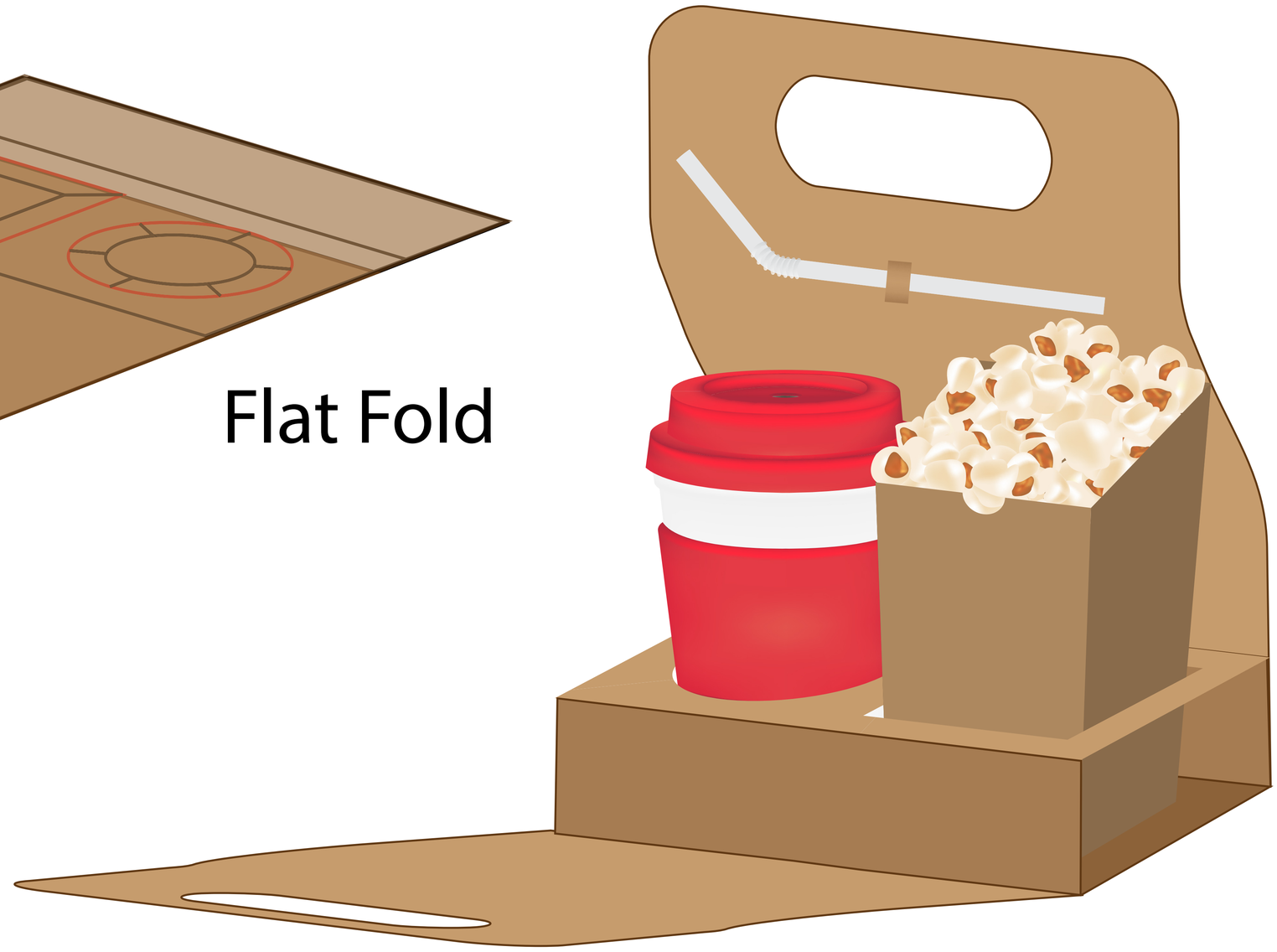

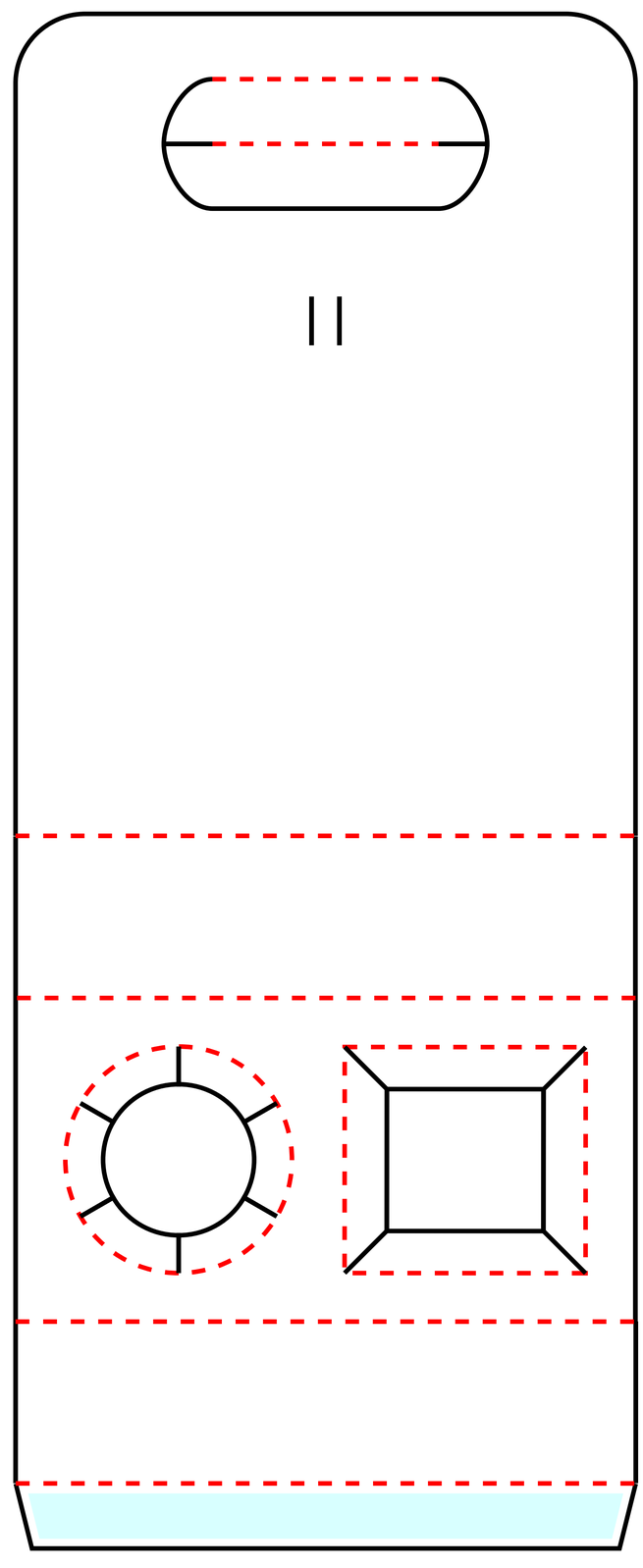

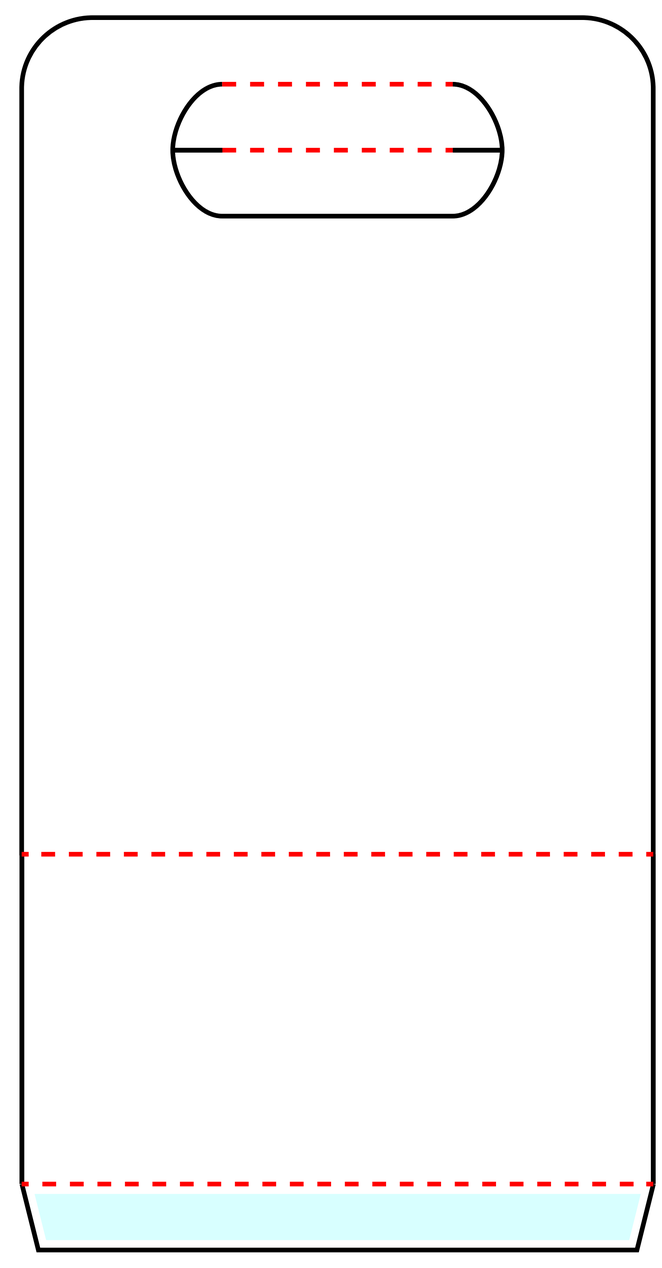

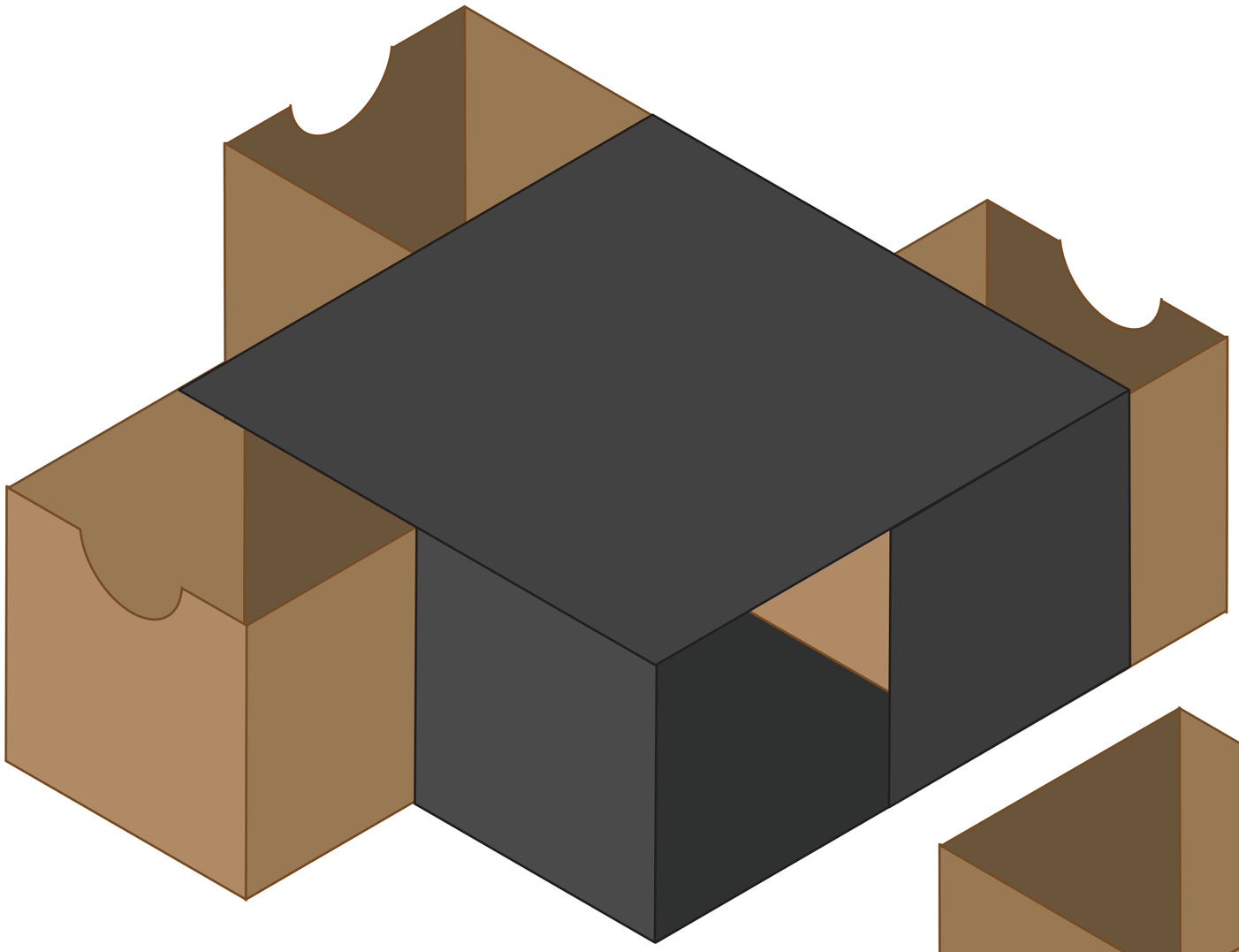

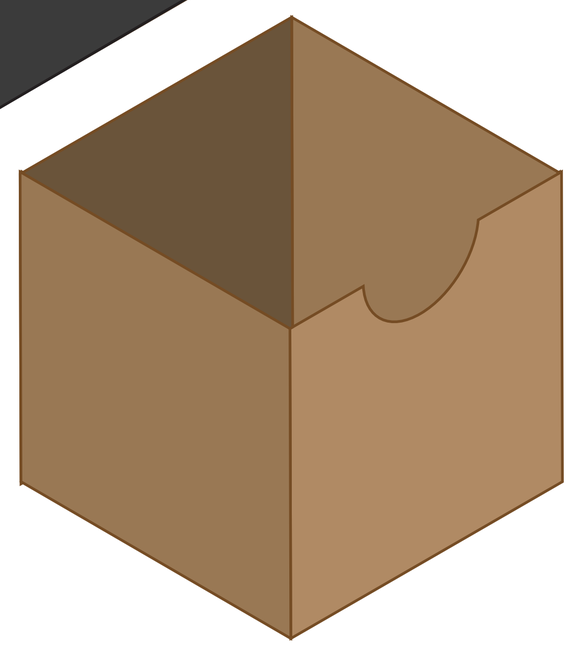

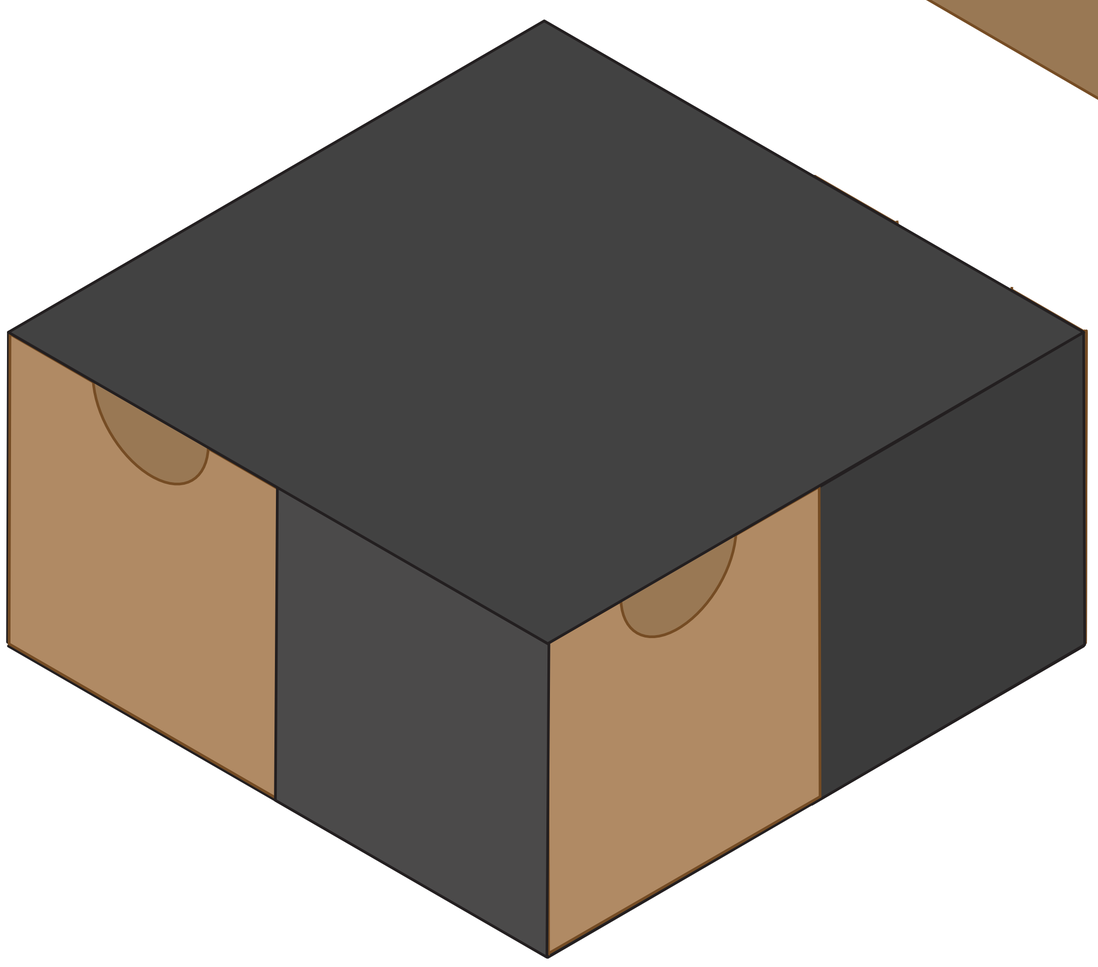

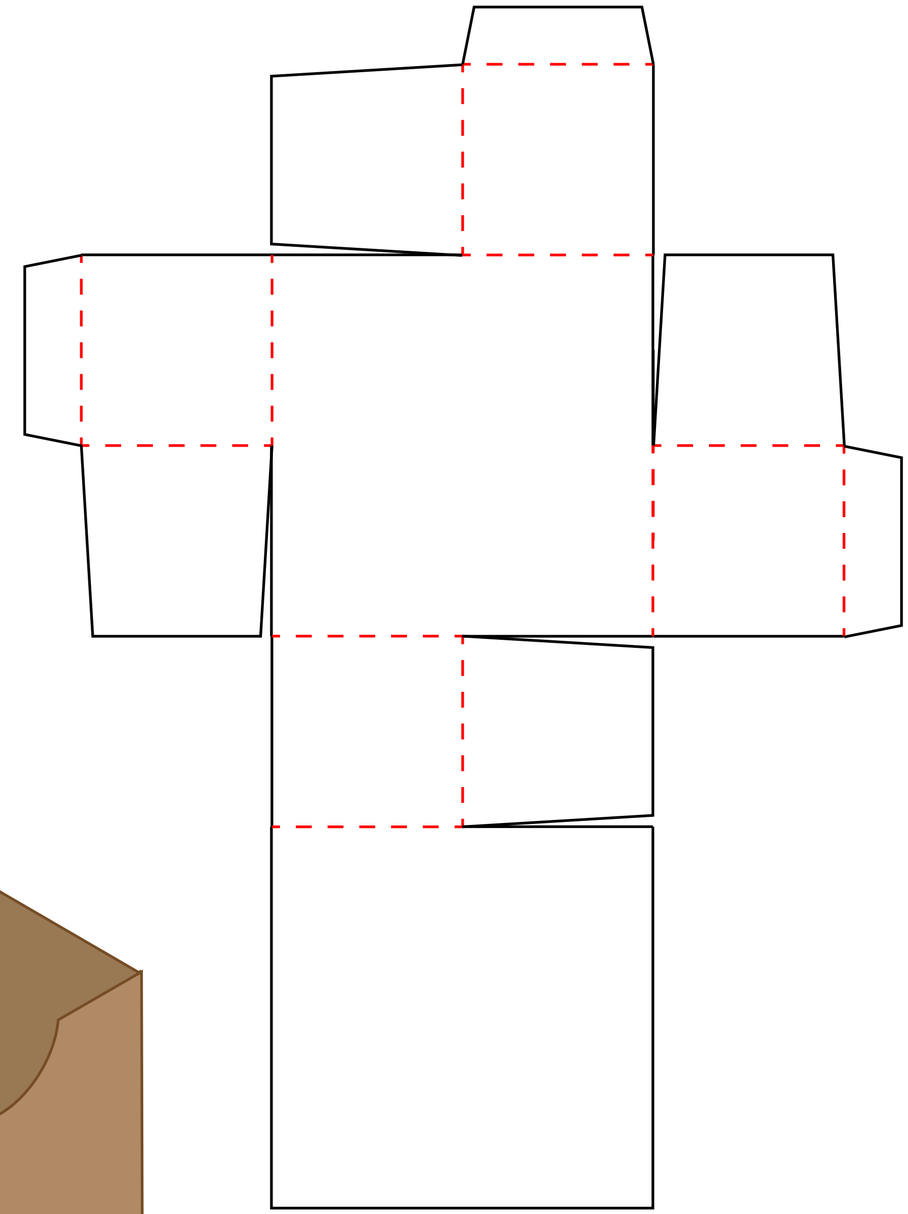

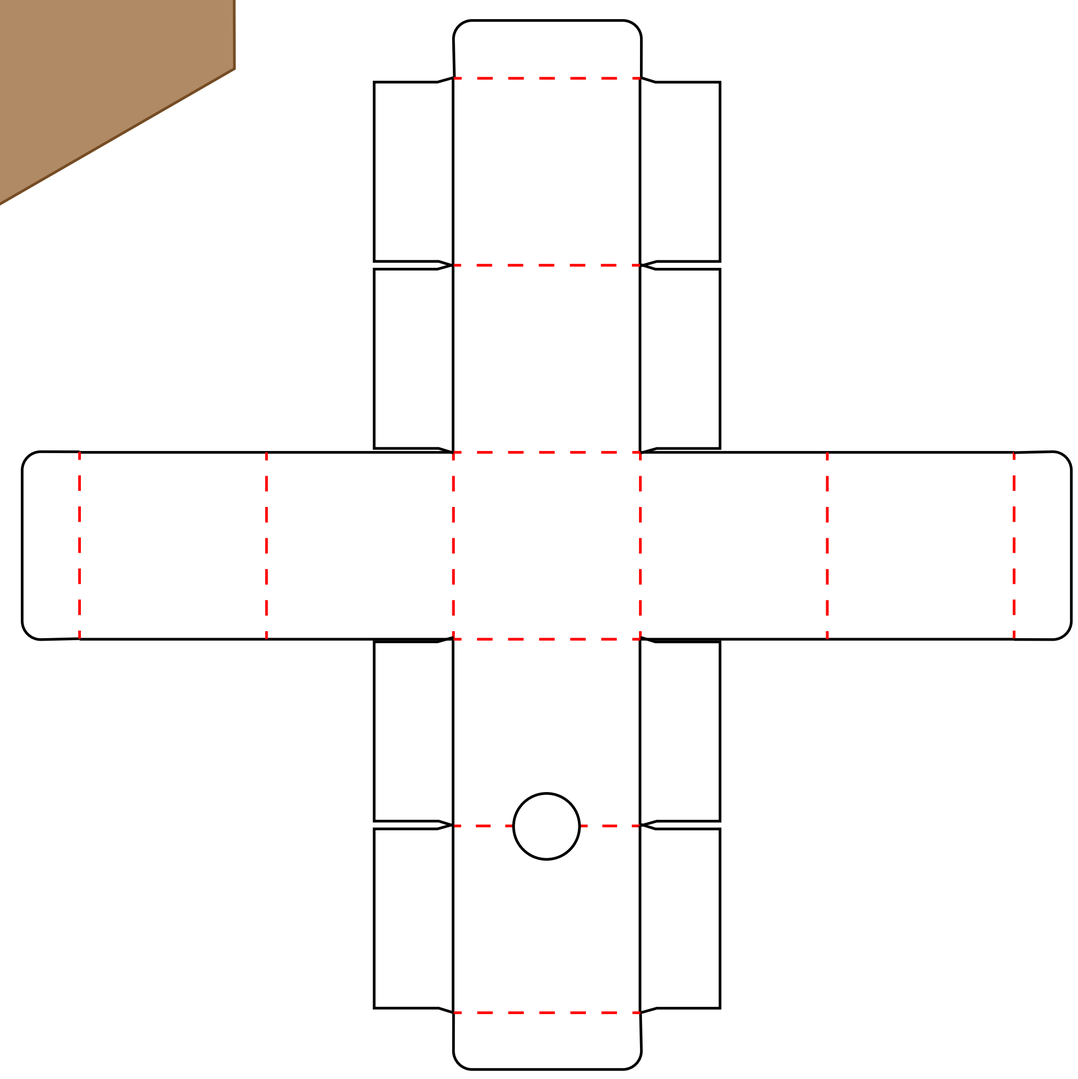

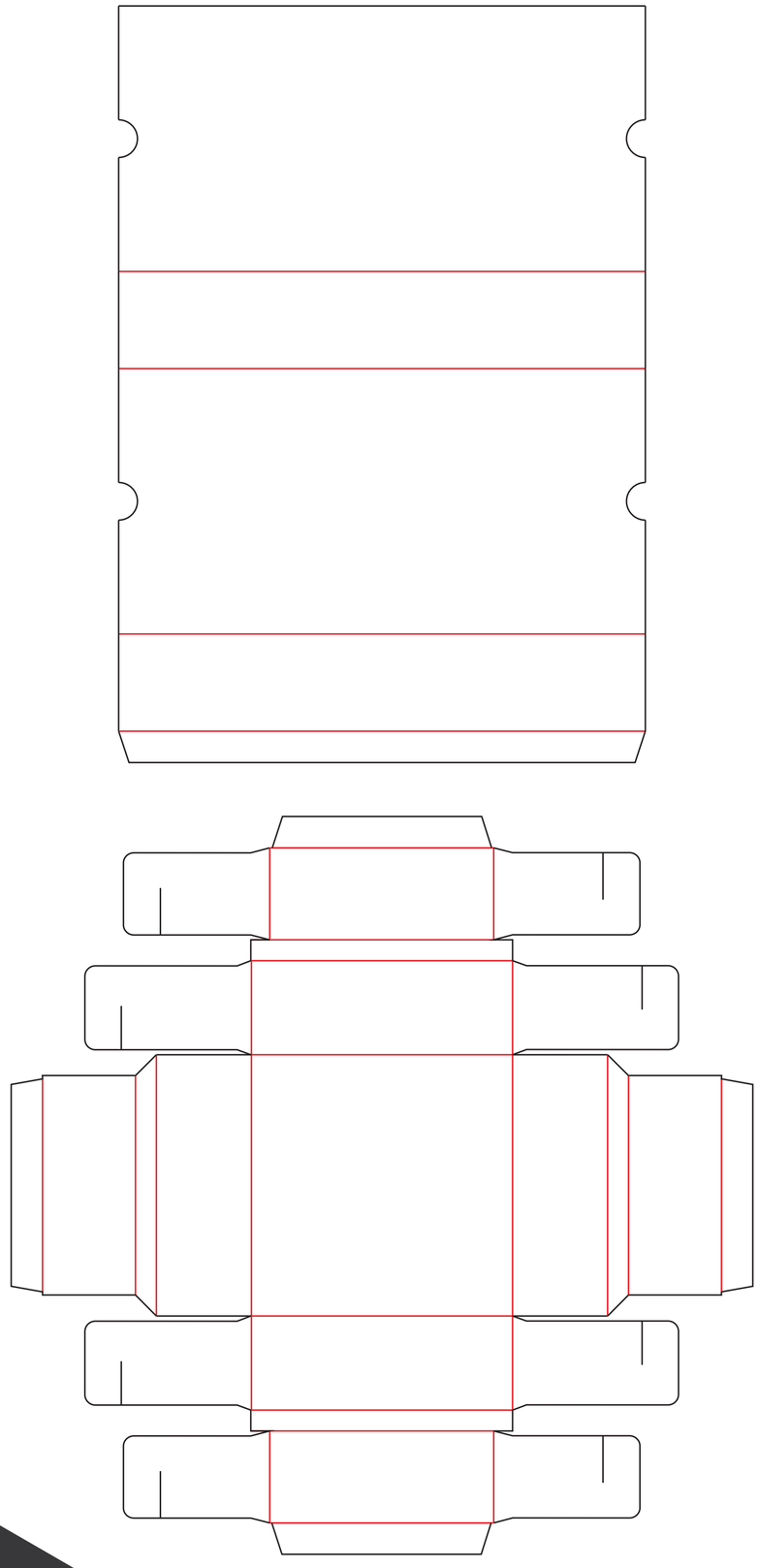

2 Piece

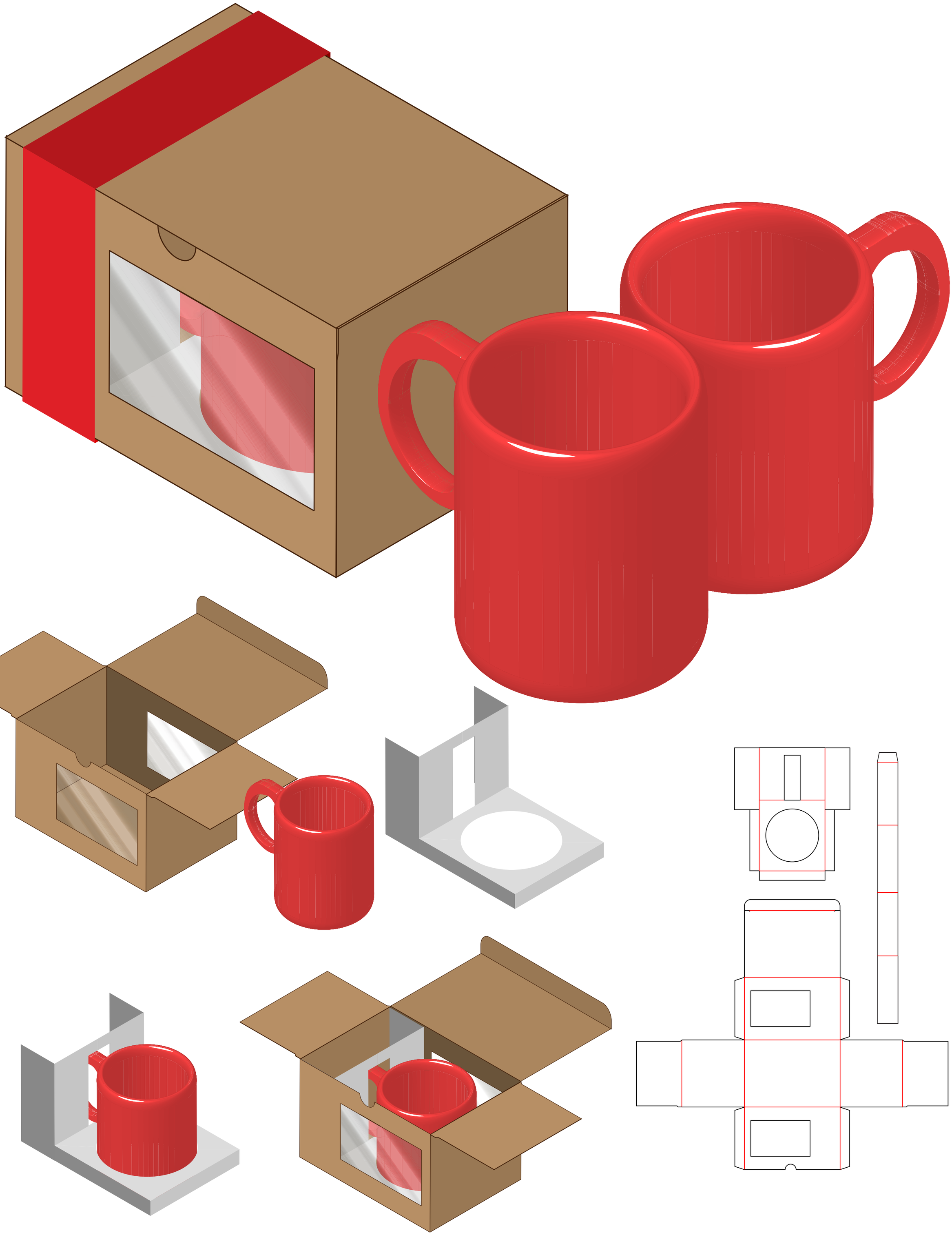

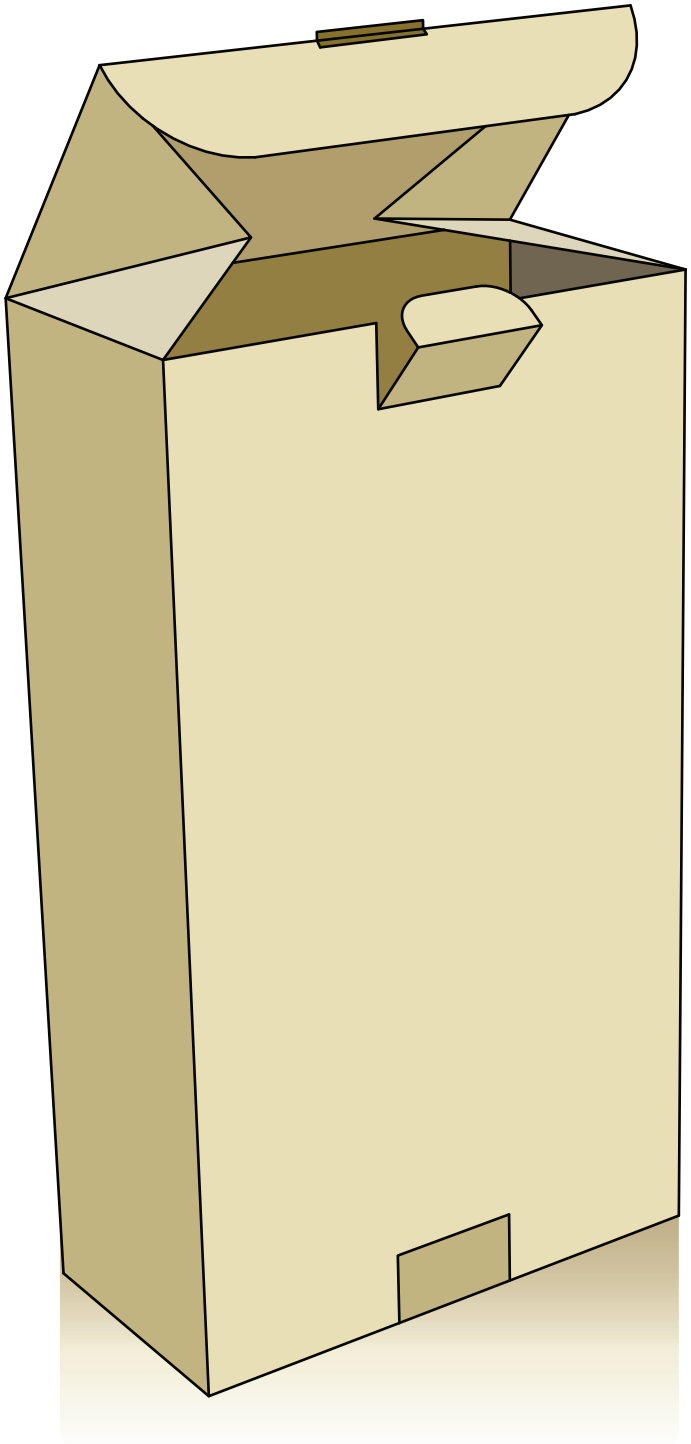

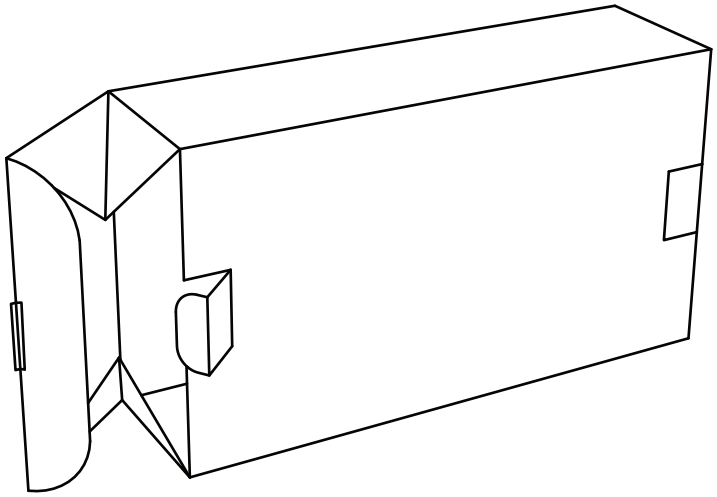

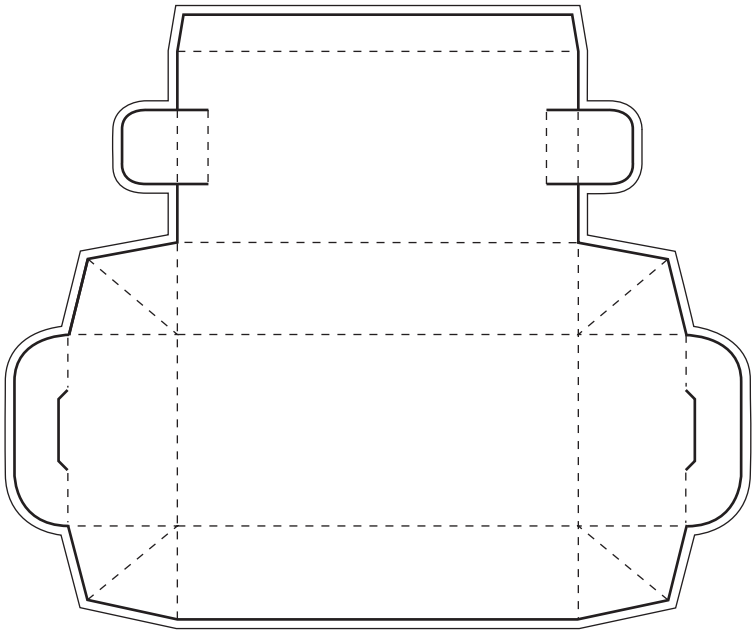

printing bleed

die-cuting line

folding line

perforaion line

zipper line

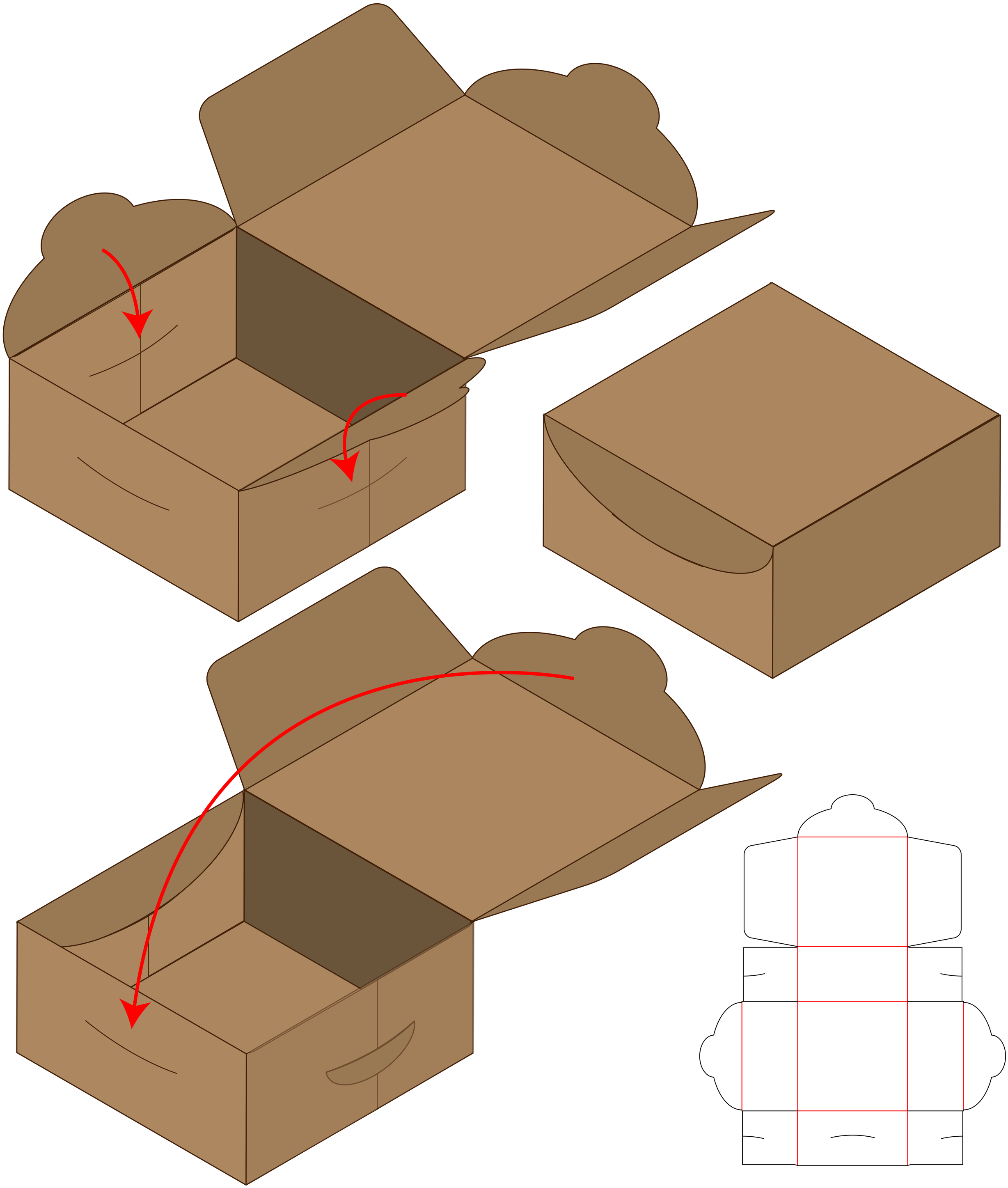

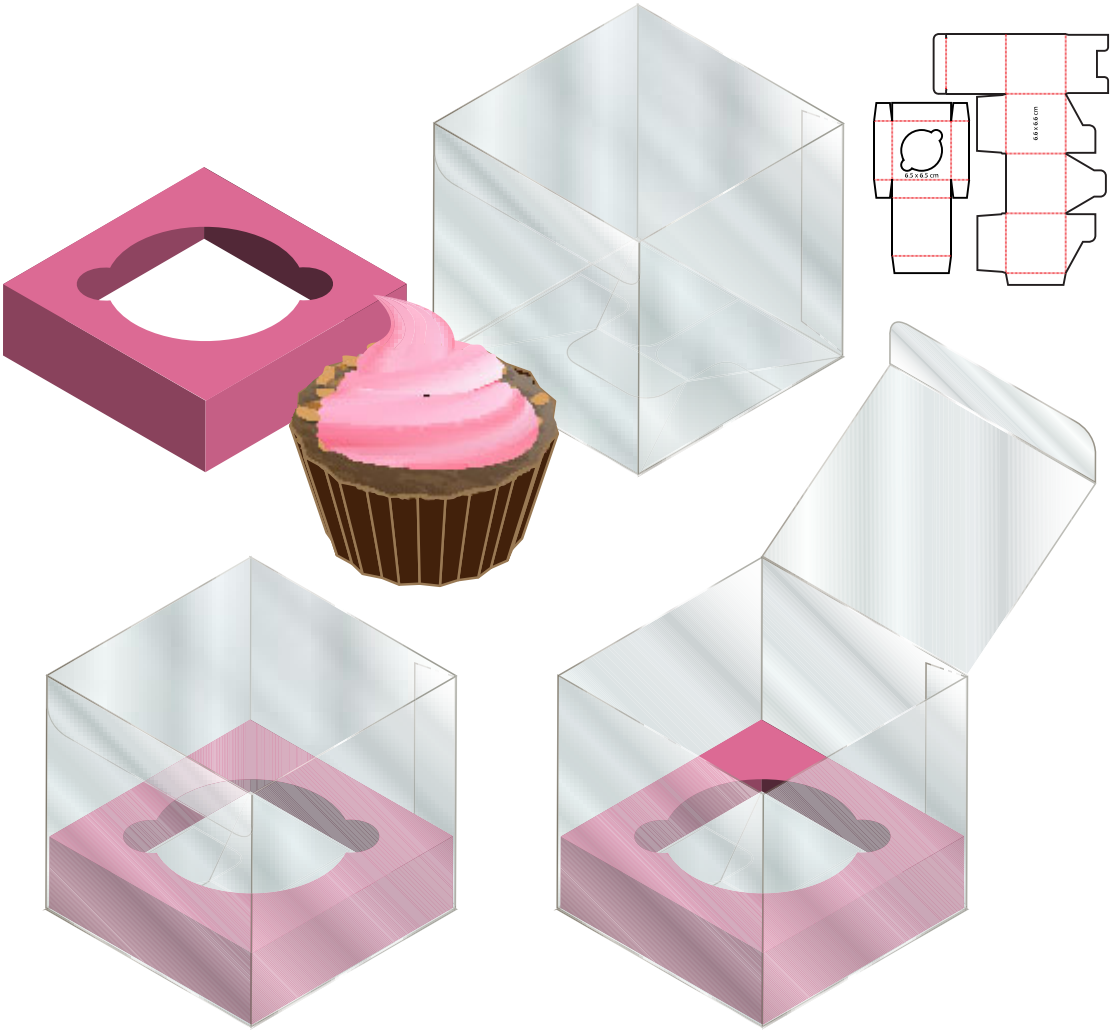
6,6x6,6cm
6,6x6,6cm

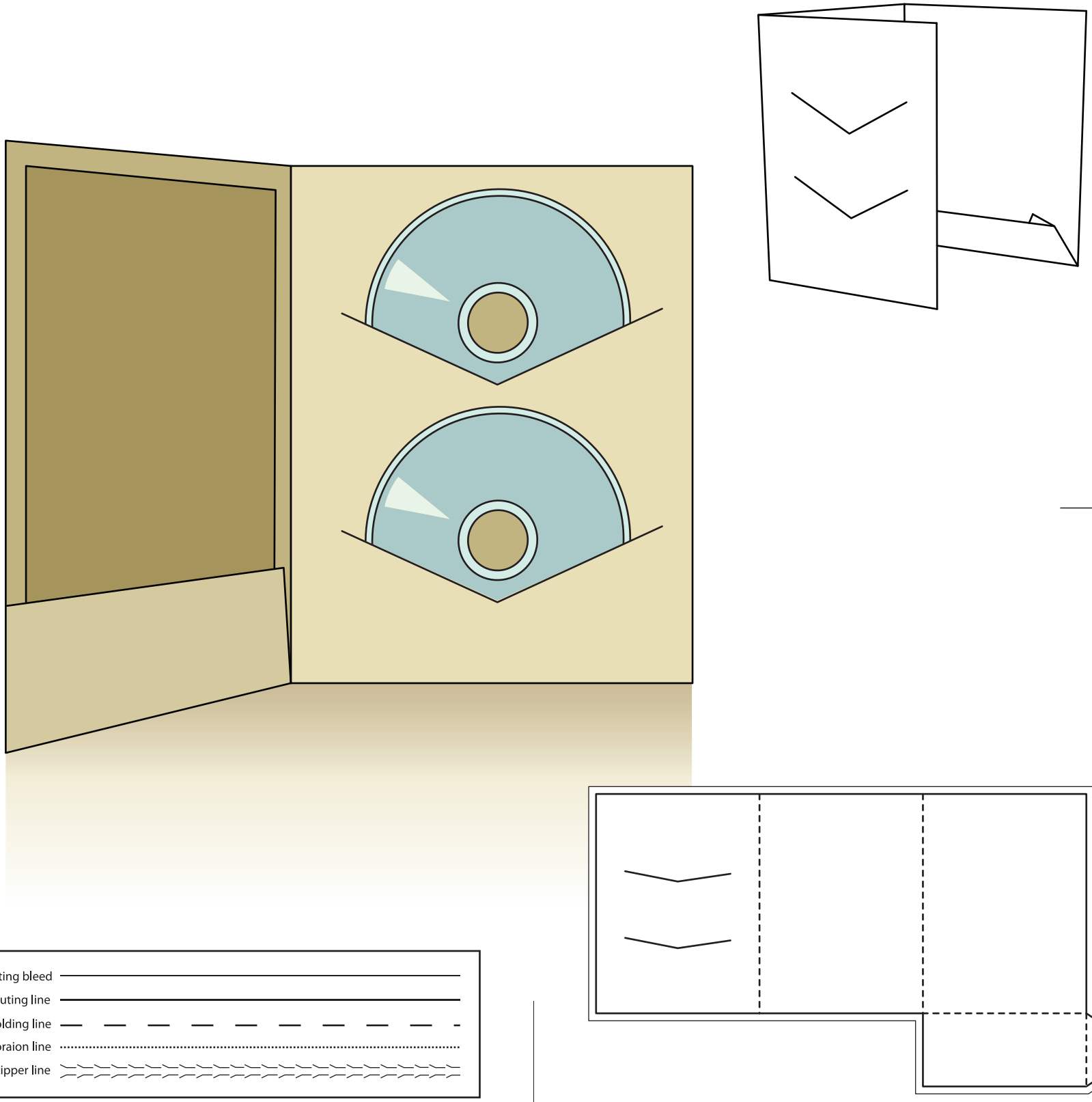
printing bleed
die-cuting line
folding line
perforaion line
zipper line

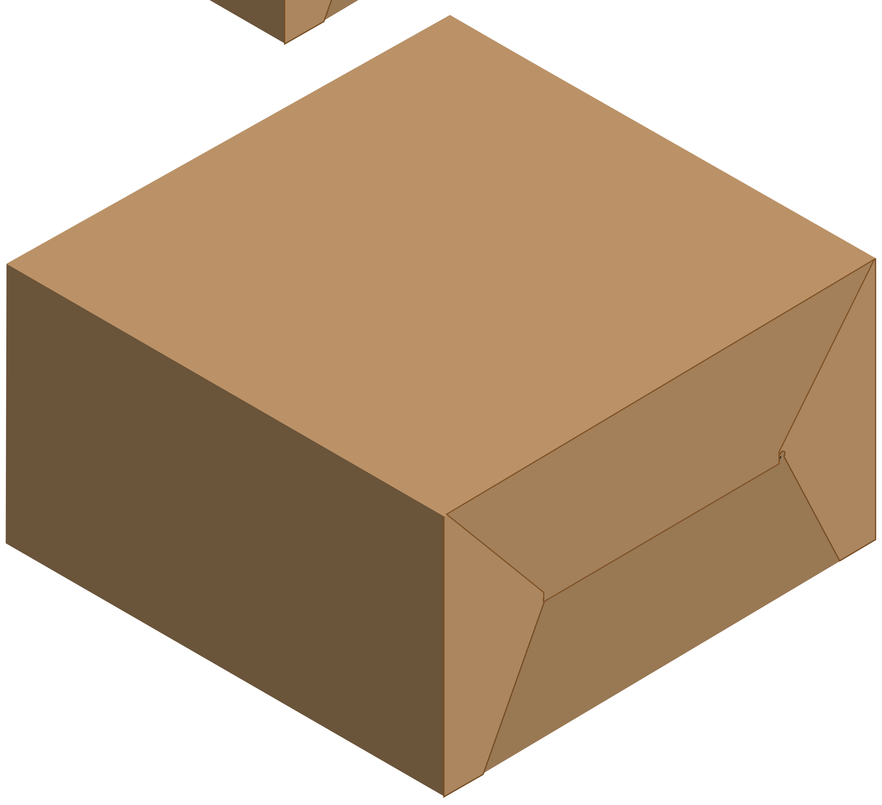

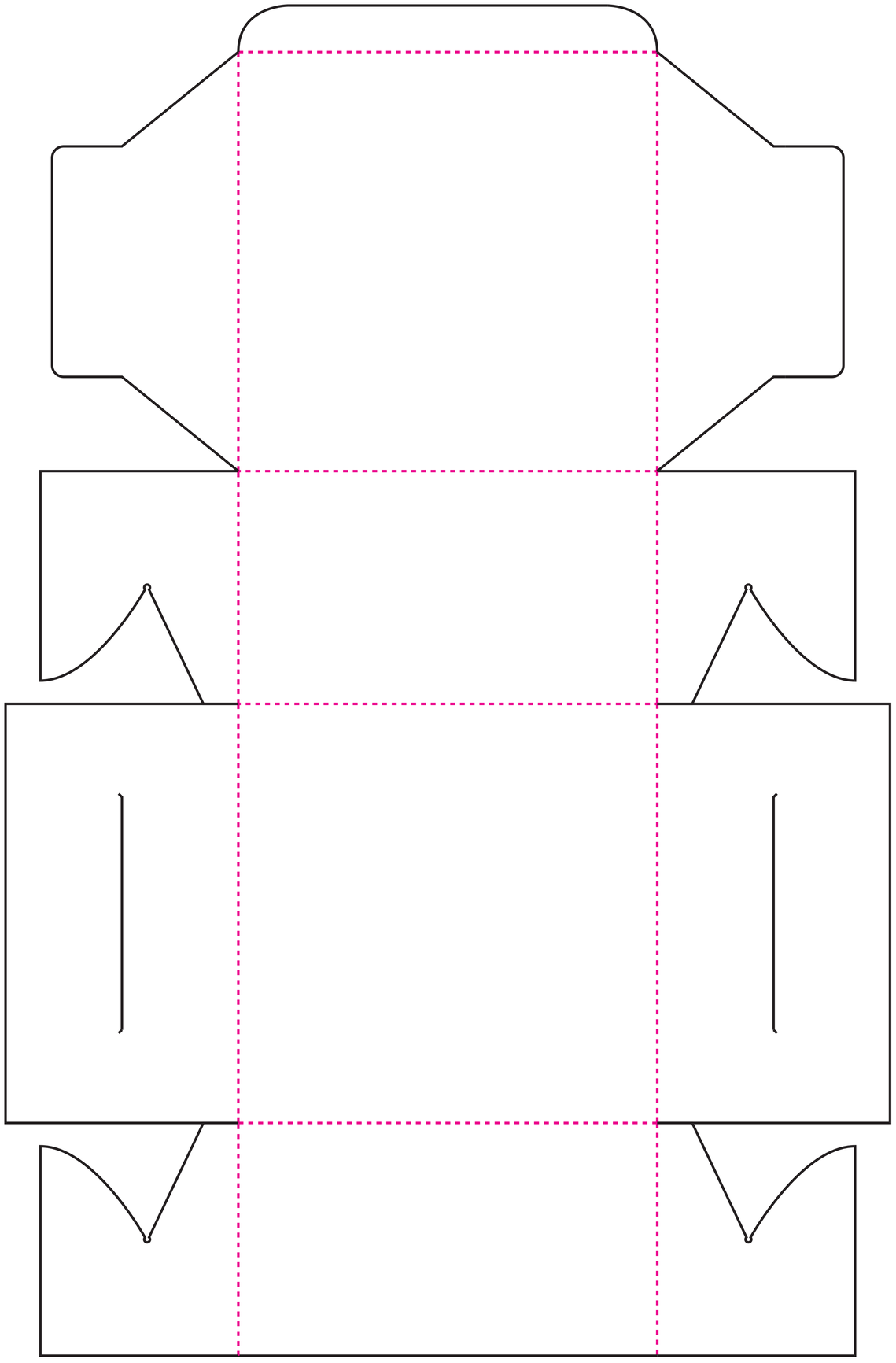

Hard Paper 200-350gsm

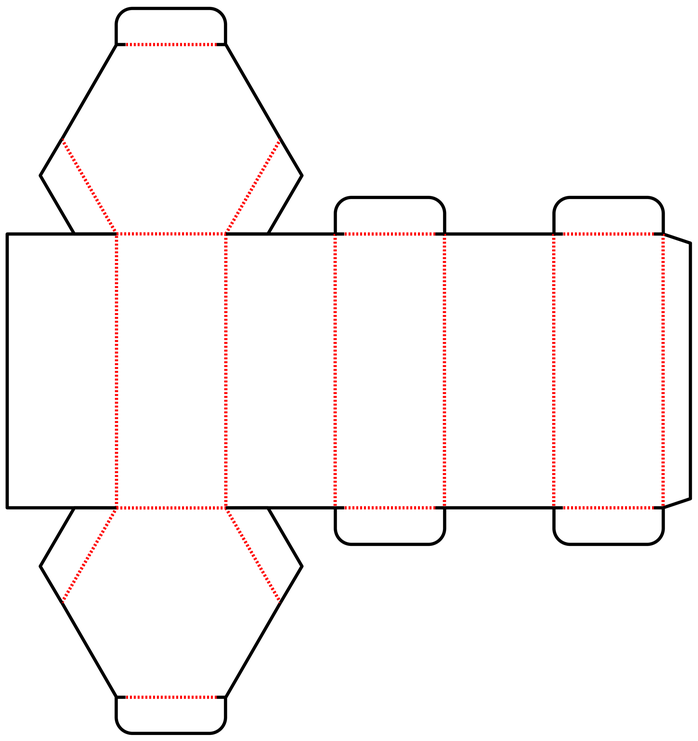

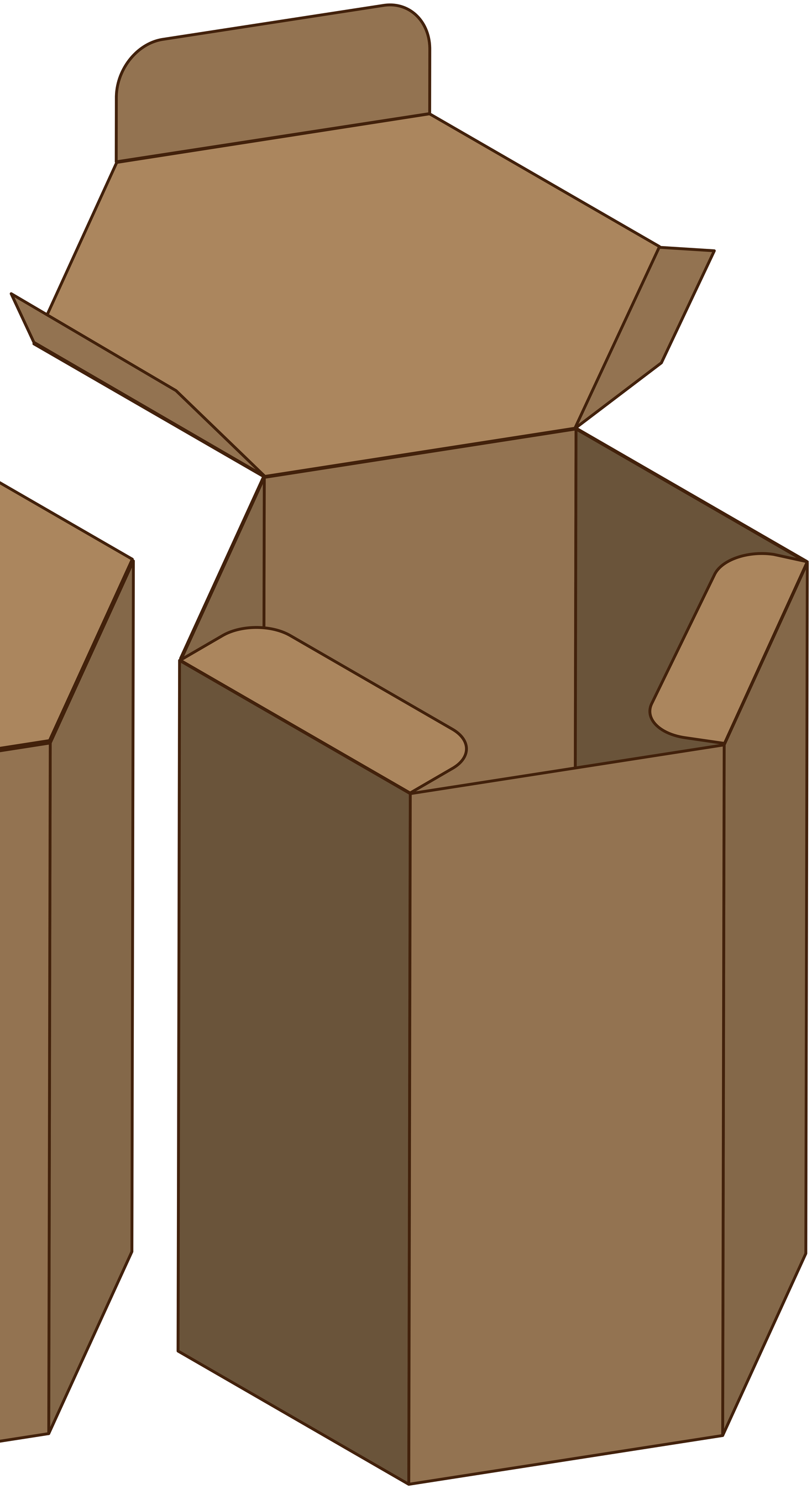

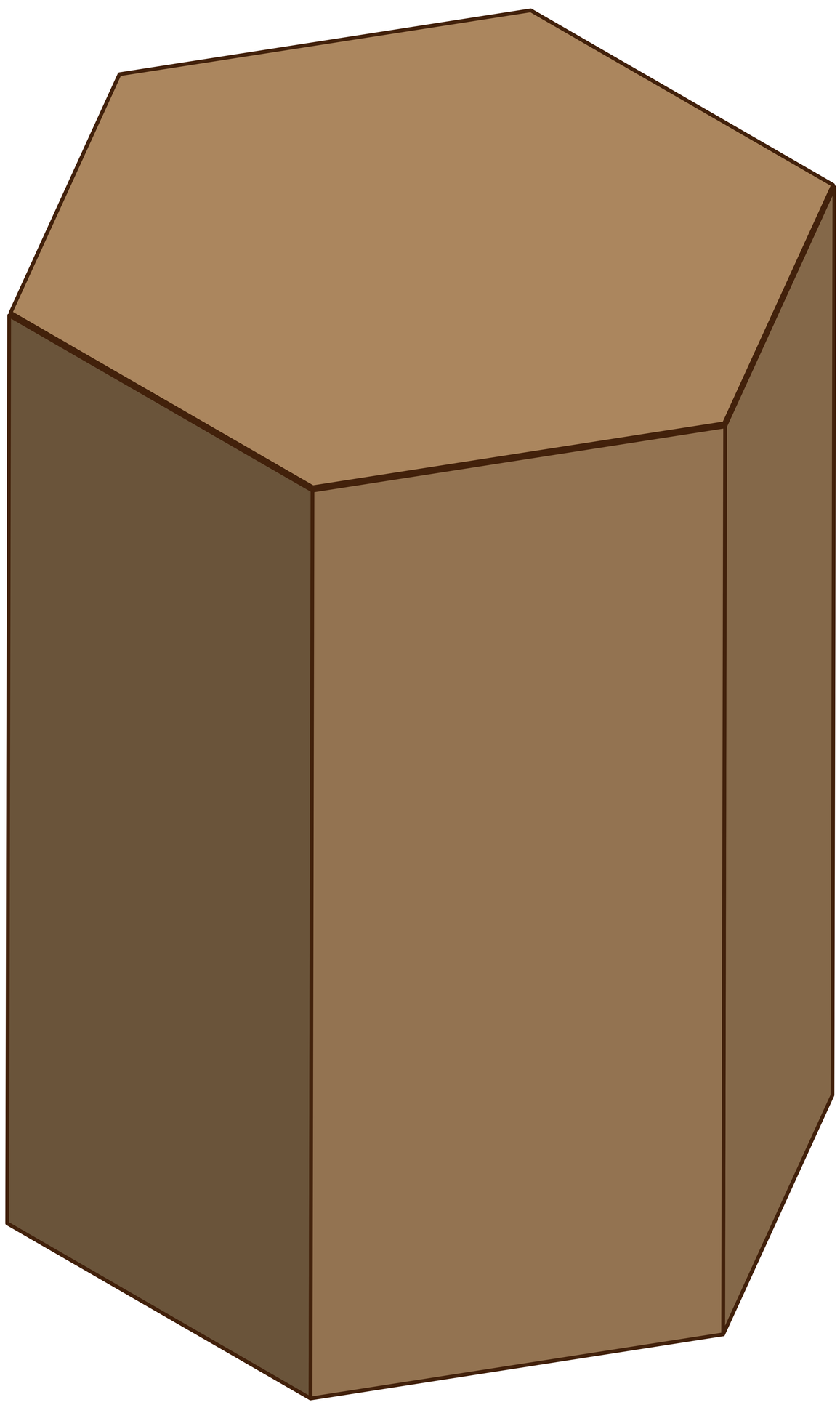

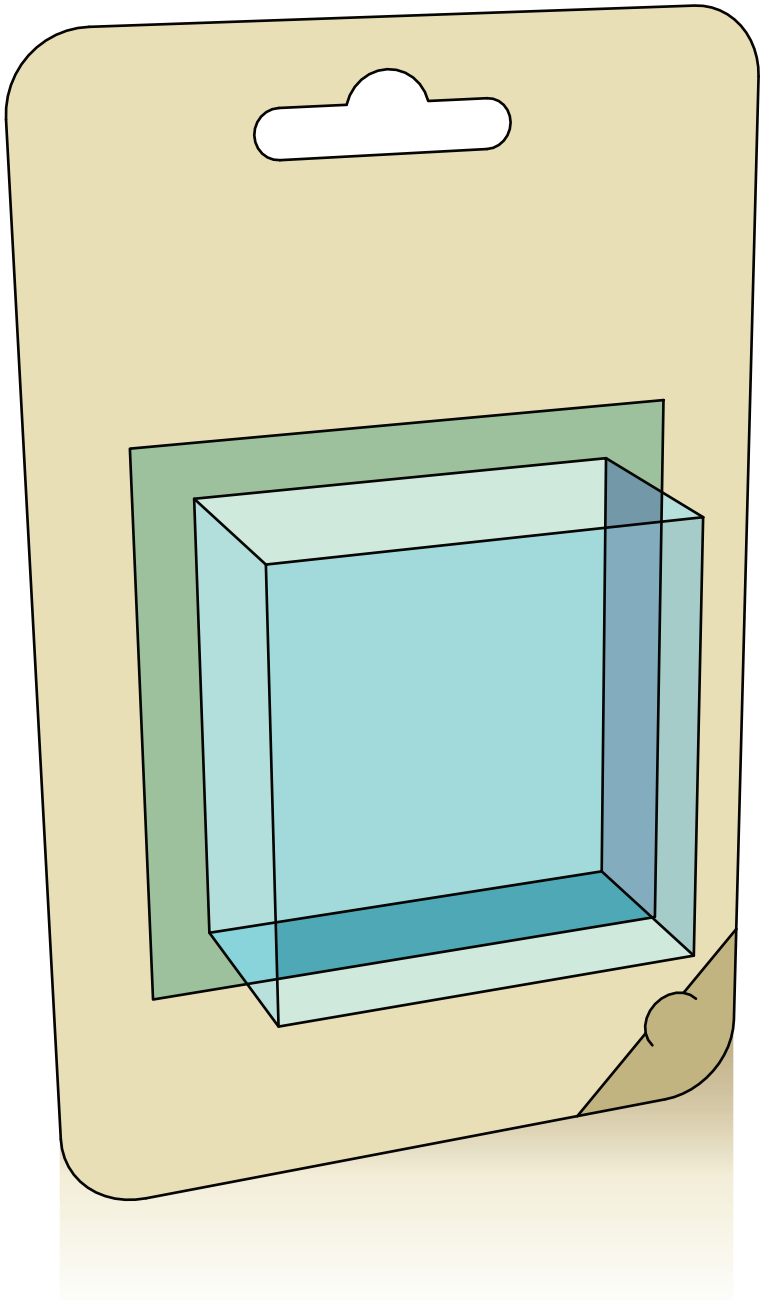

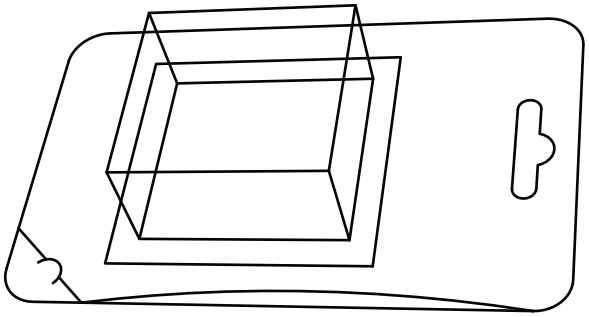

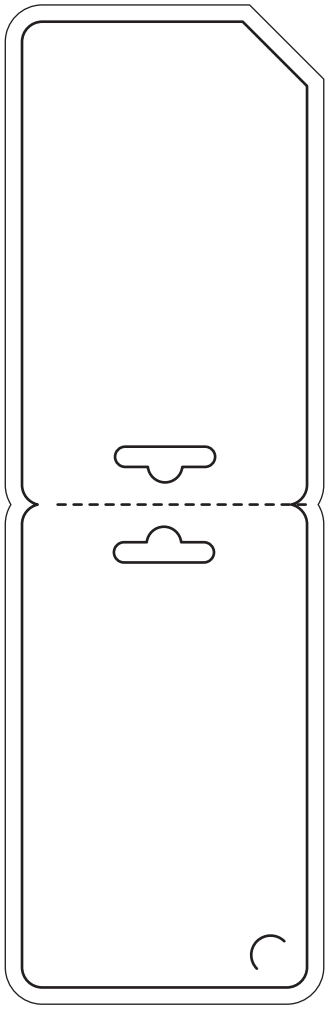

printing bleed

die-cuting line

folding line

perforaion line

zipper line

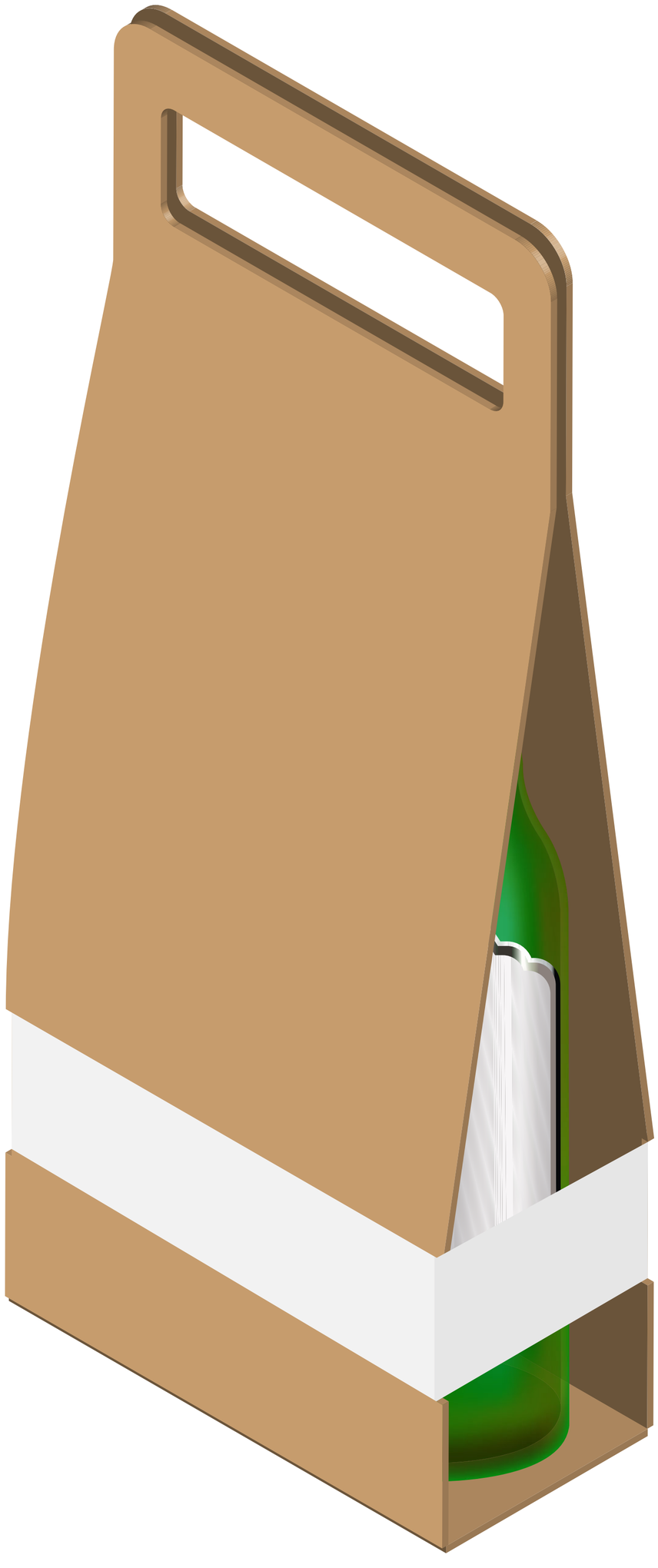

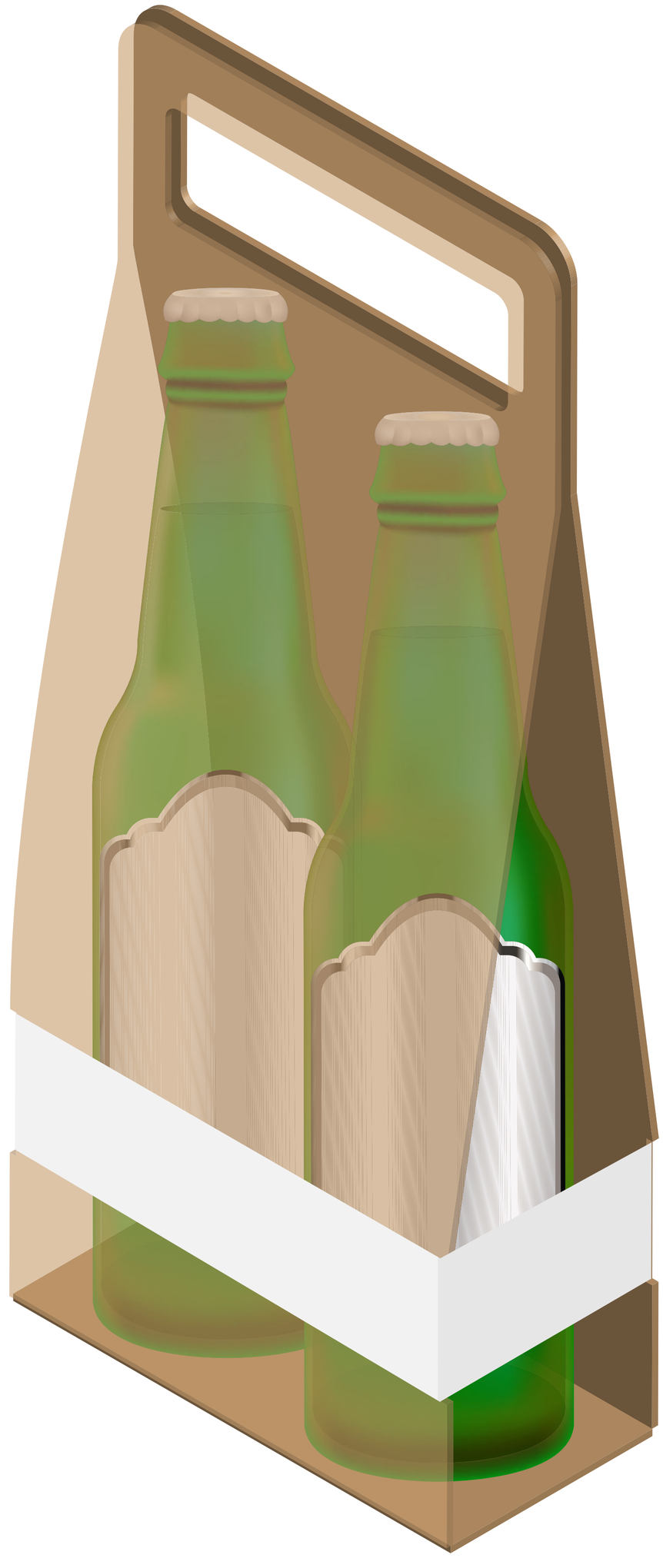

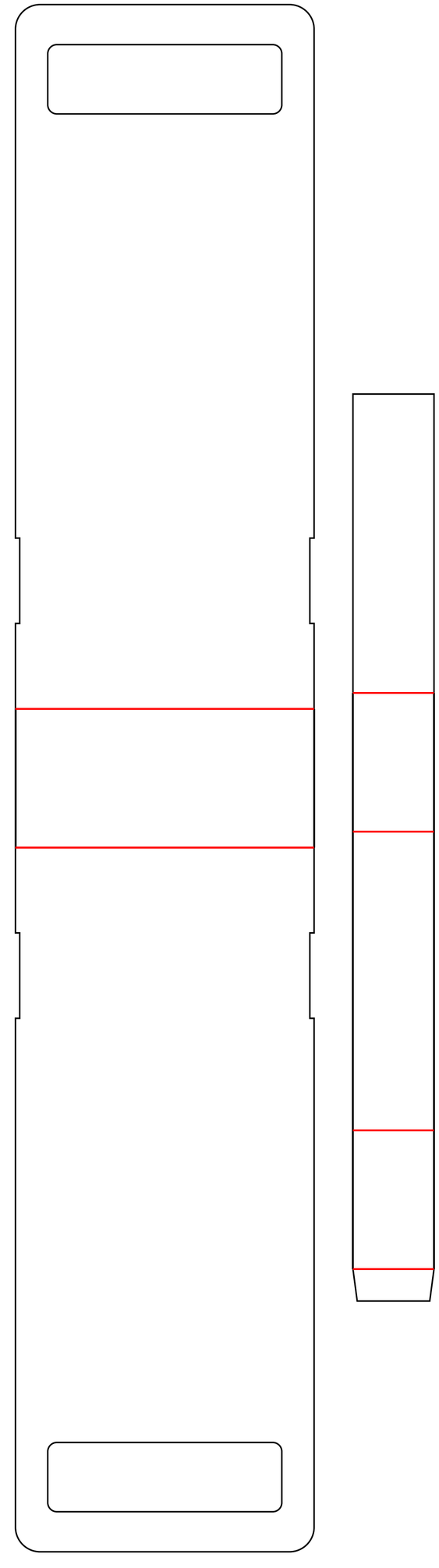

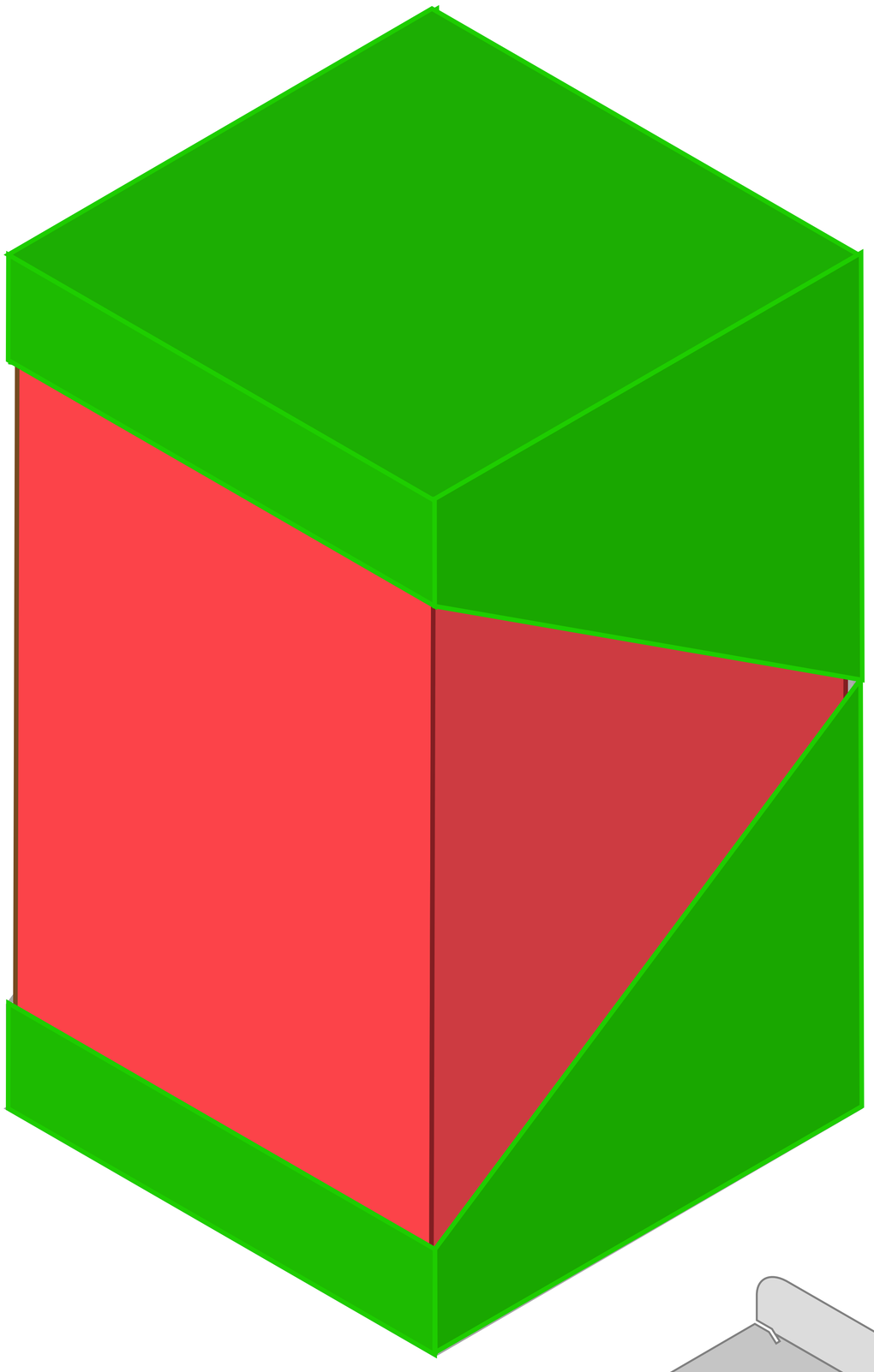

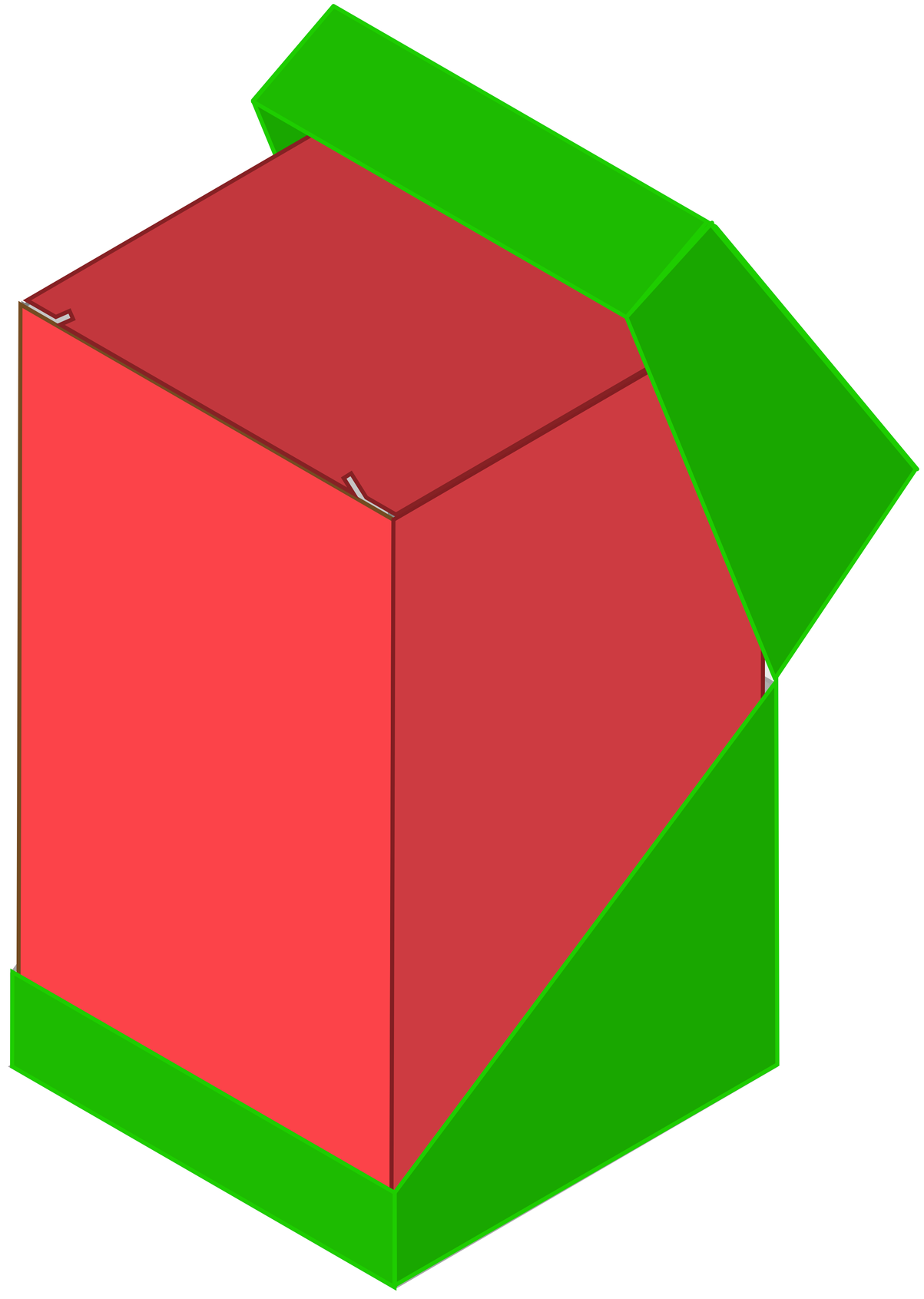

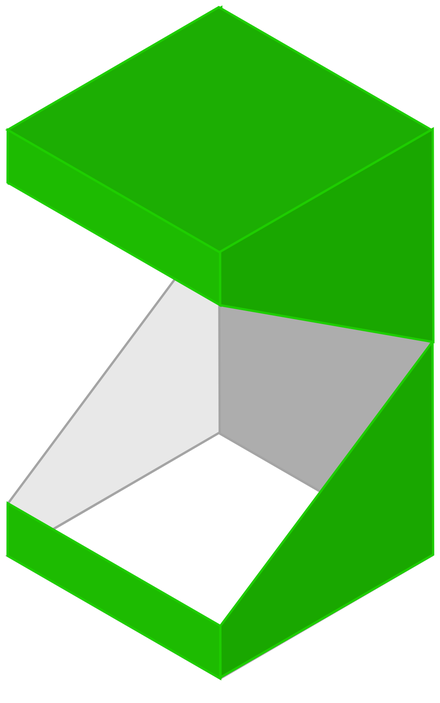

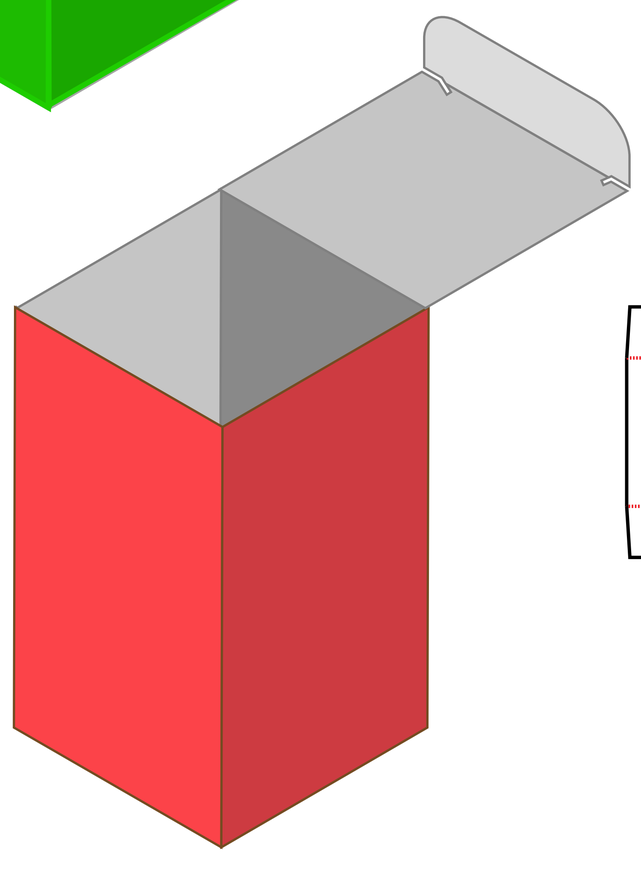

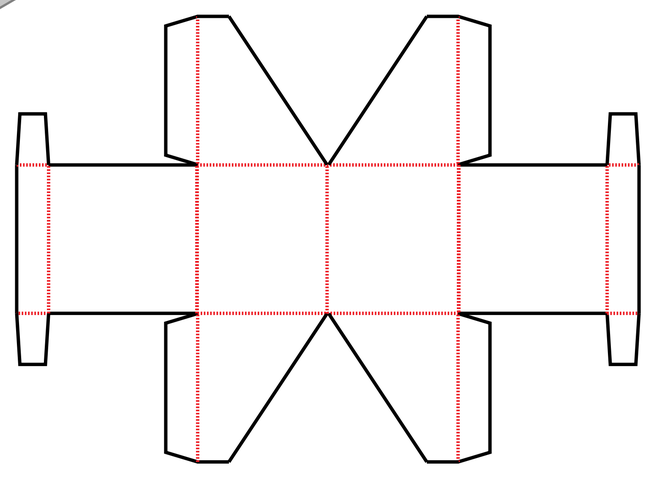

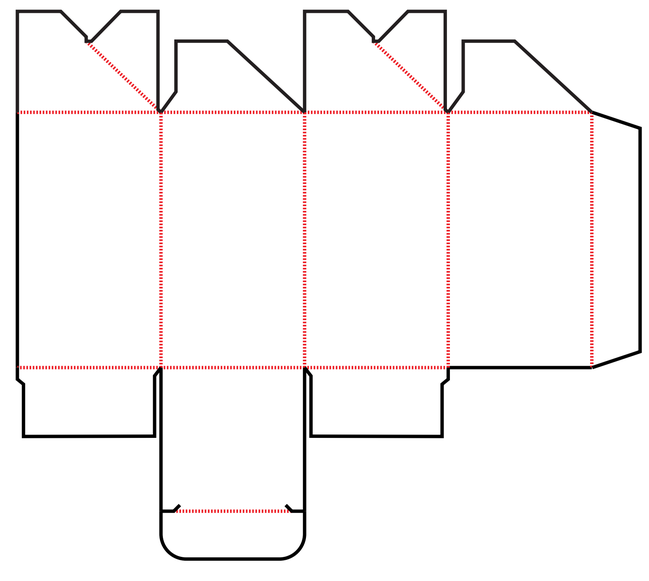

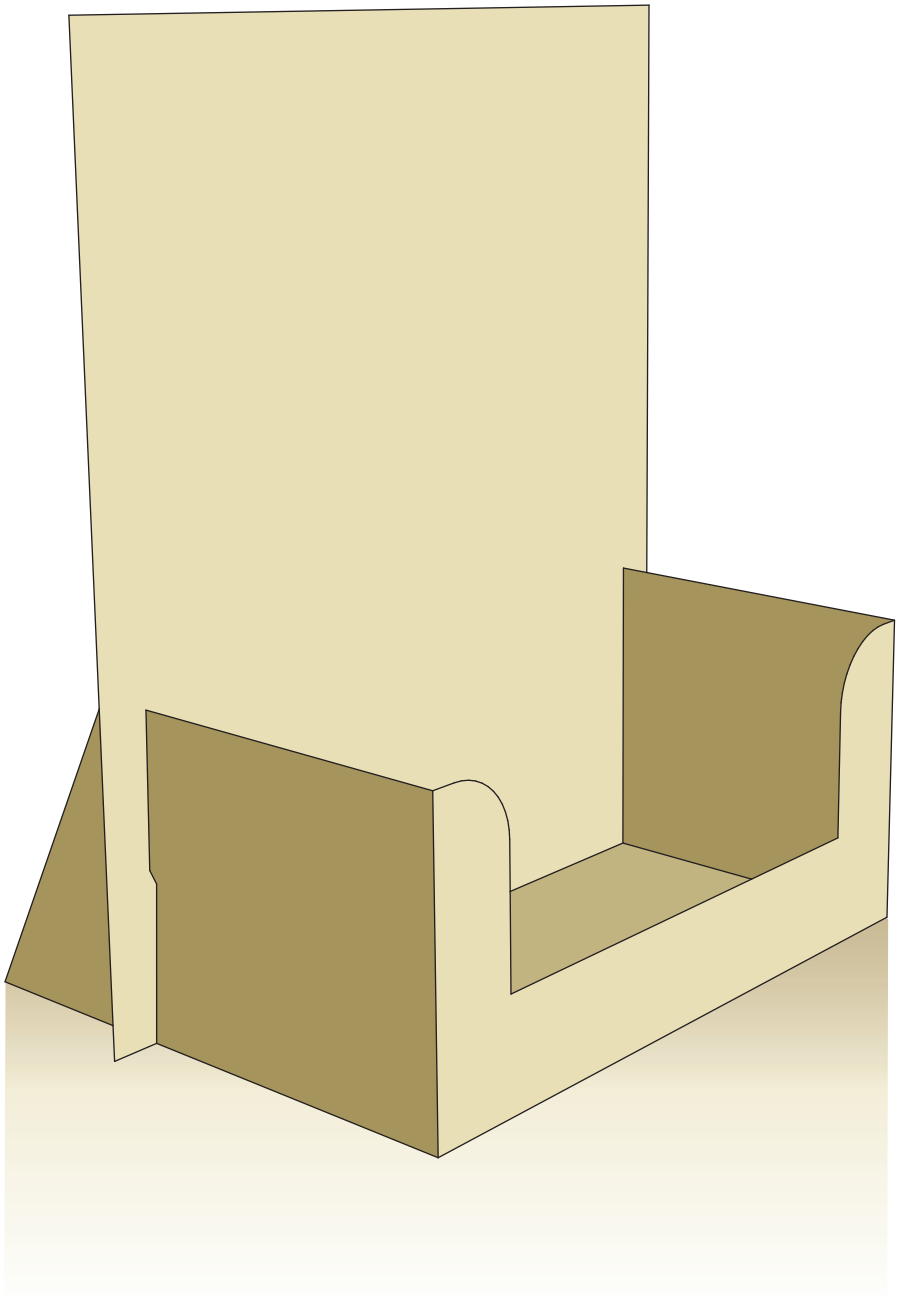

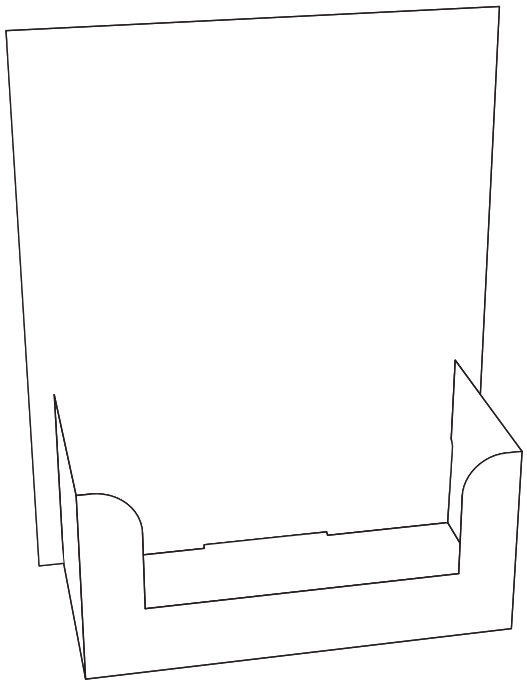

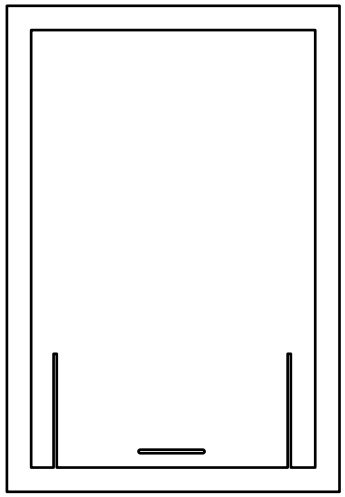

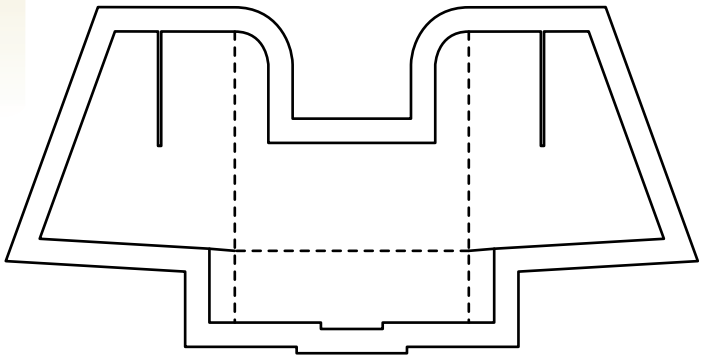

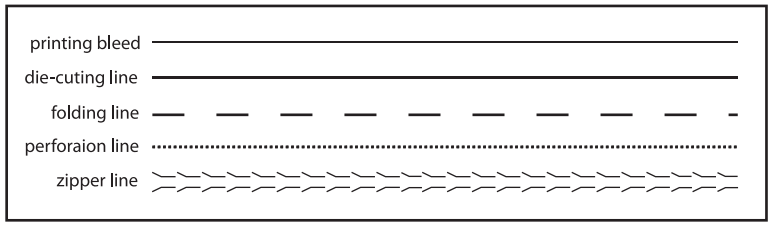
printing bleed
die-cuting line
folding line
perforaion line
zipper line

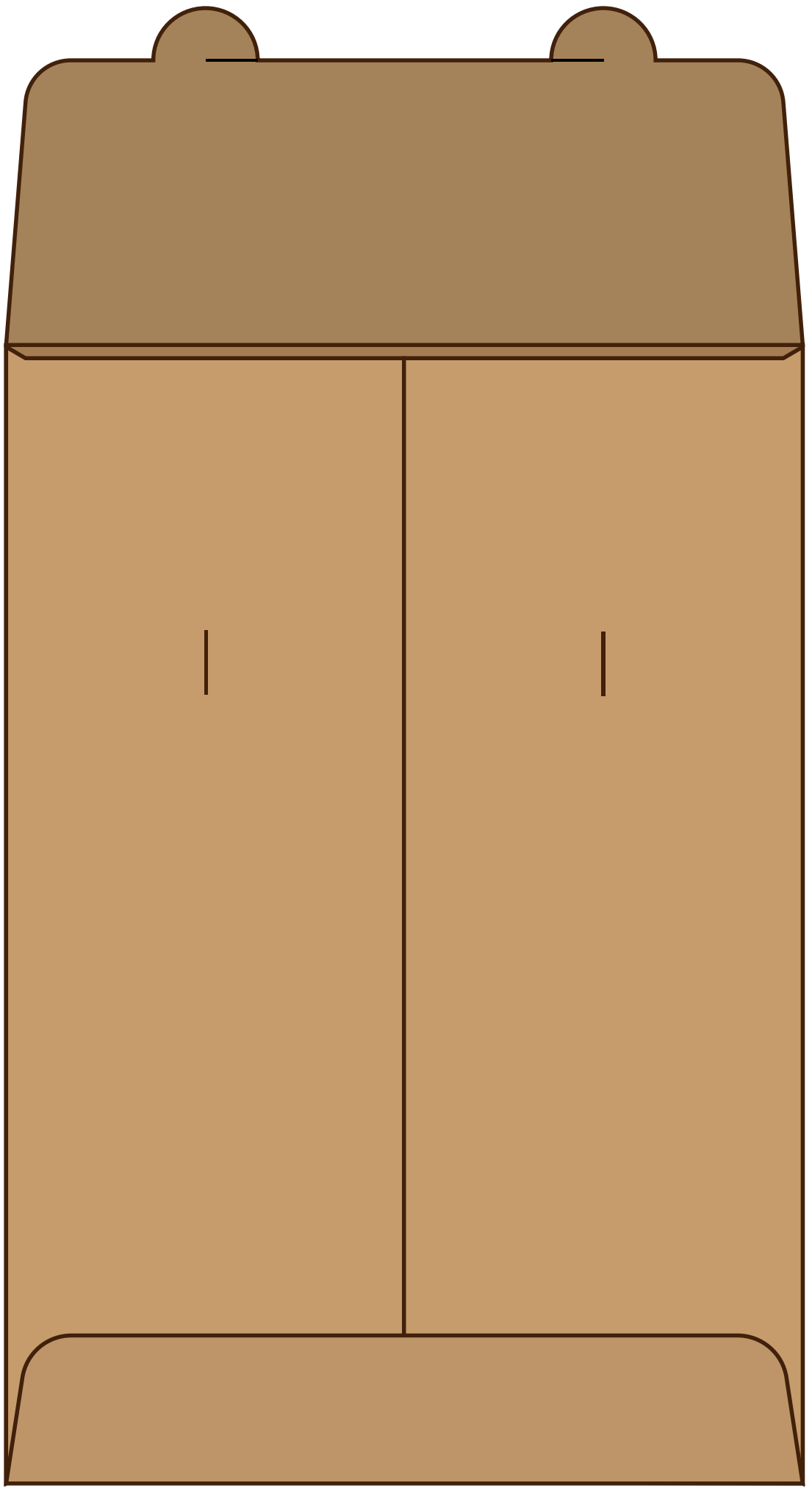

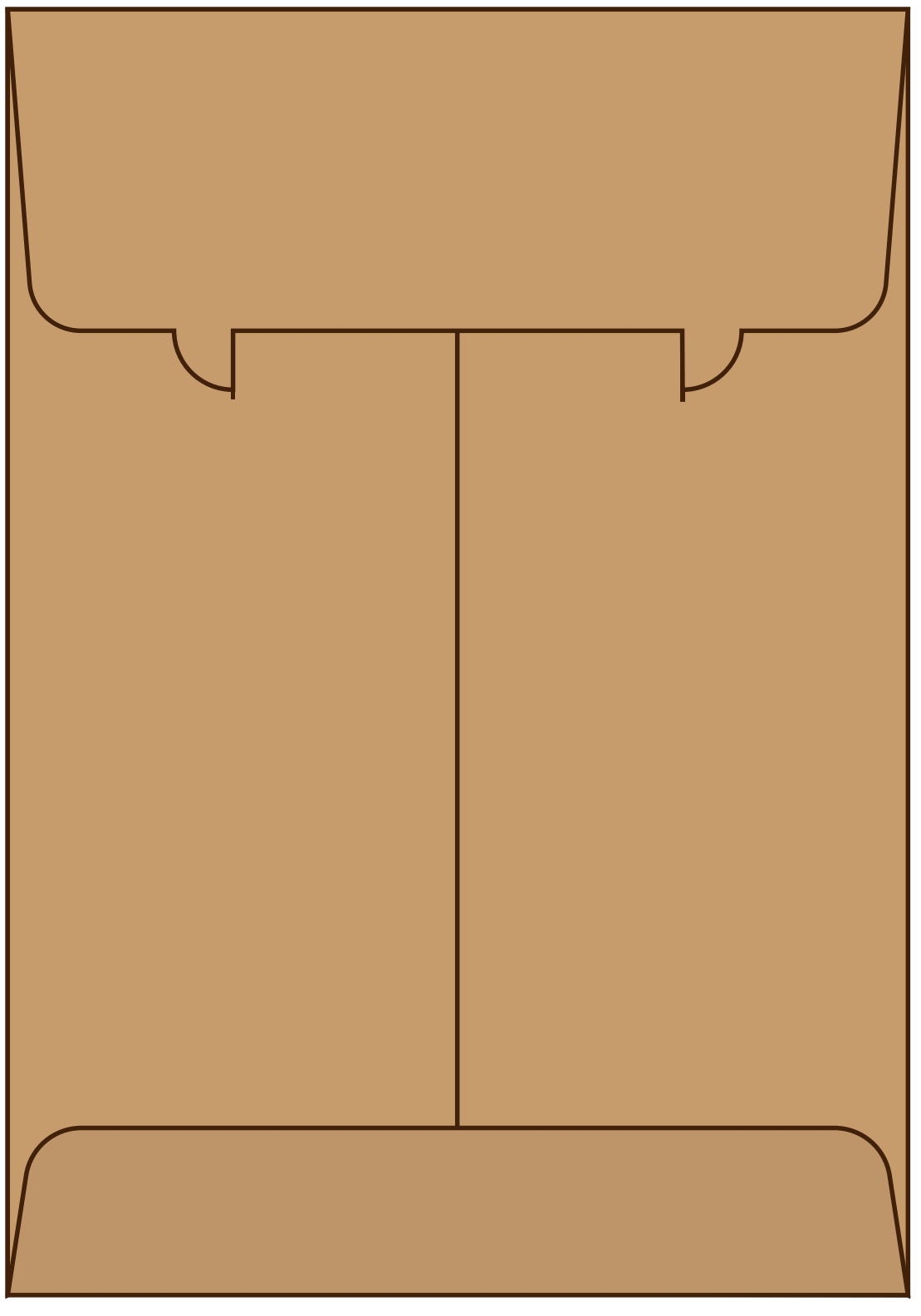

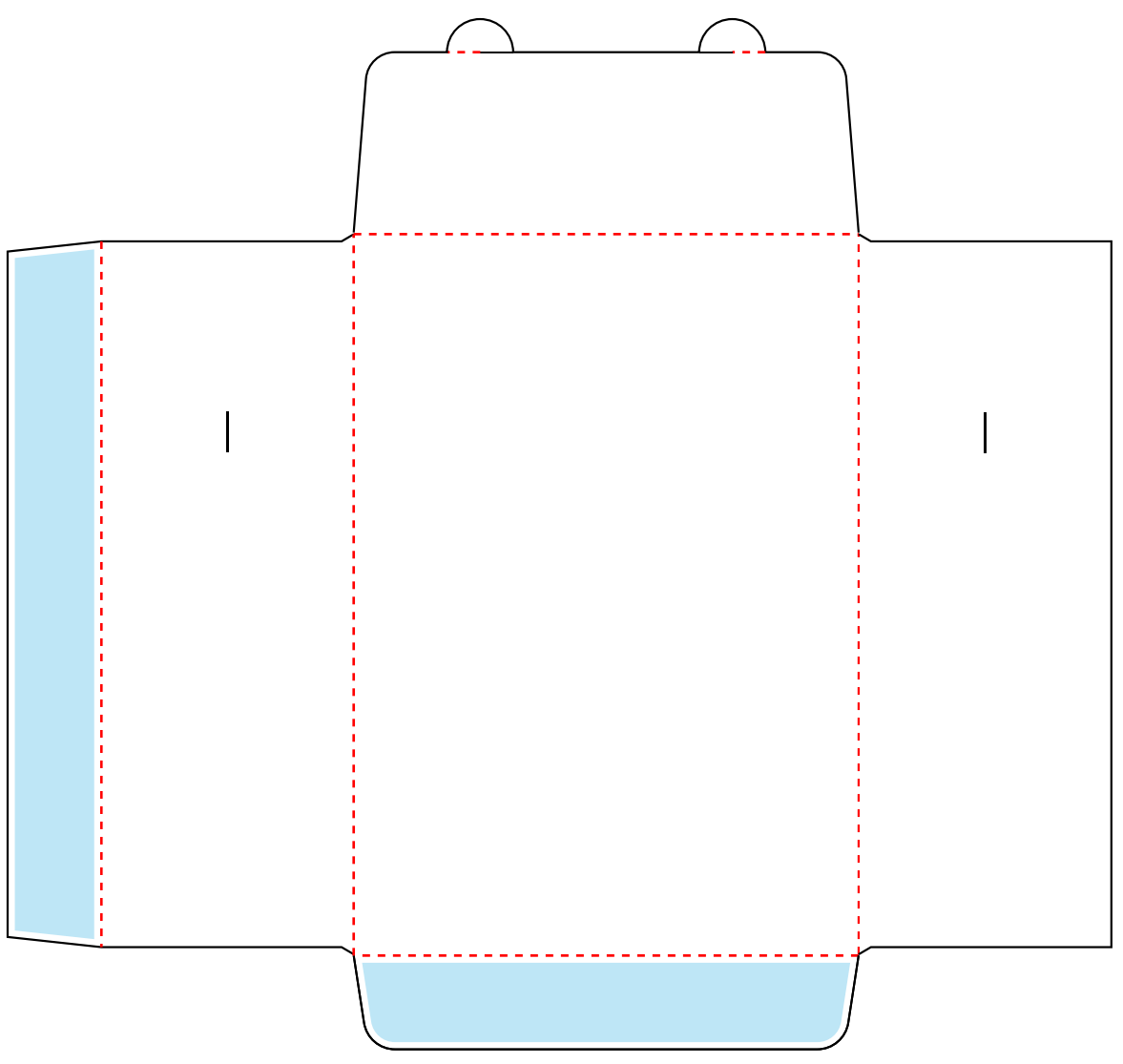

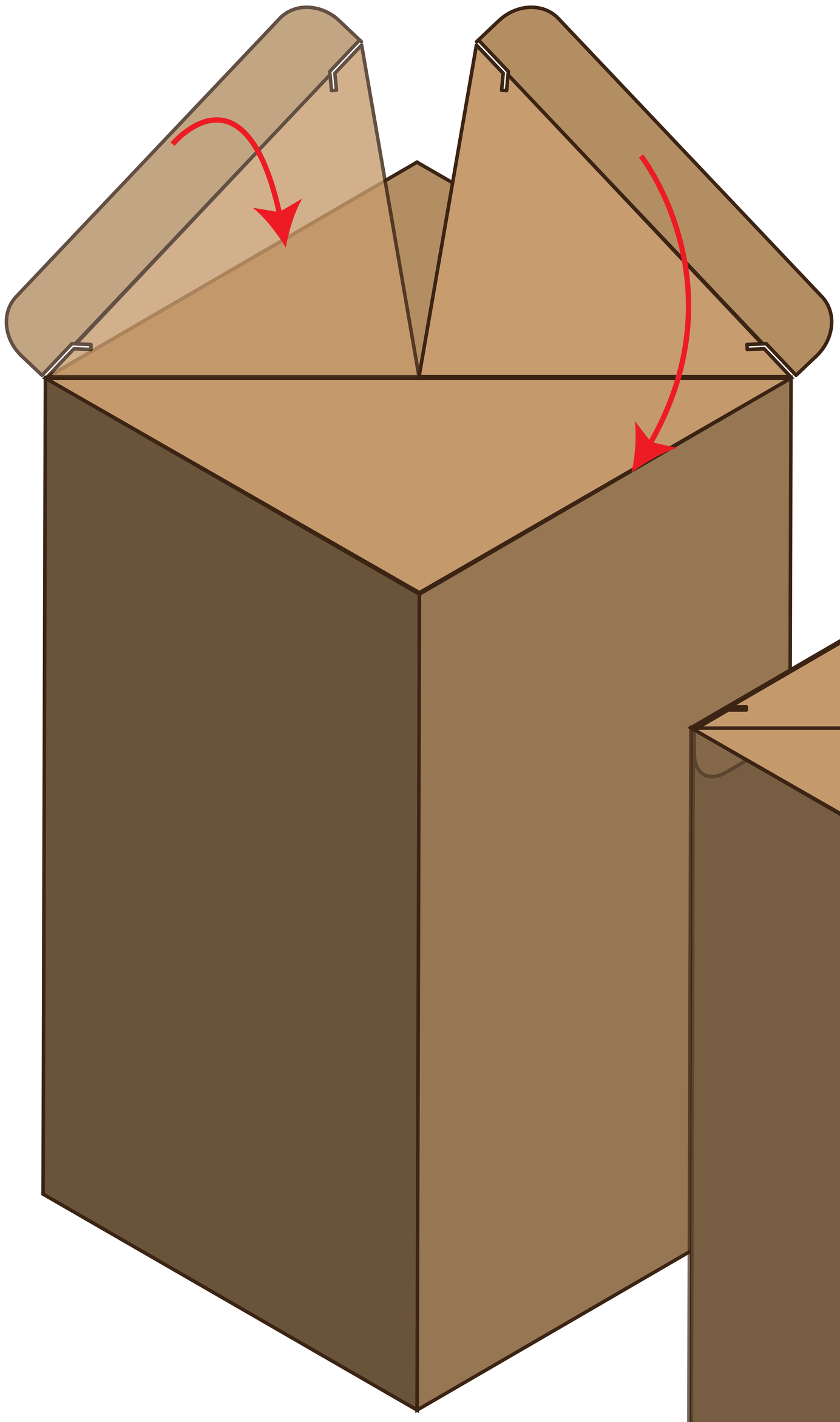

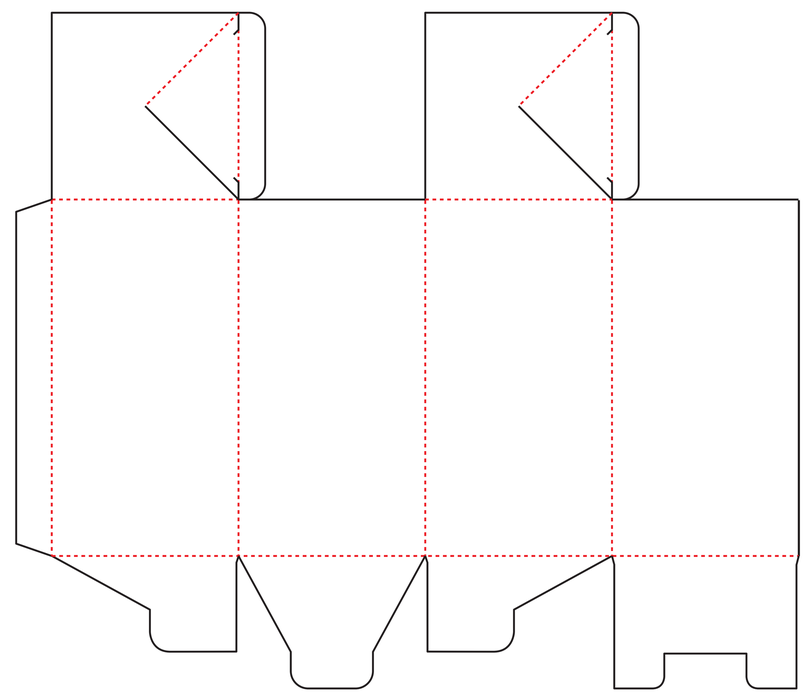

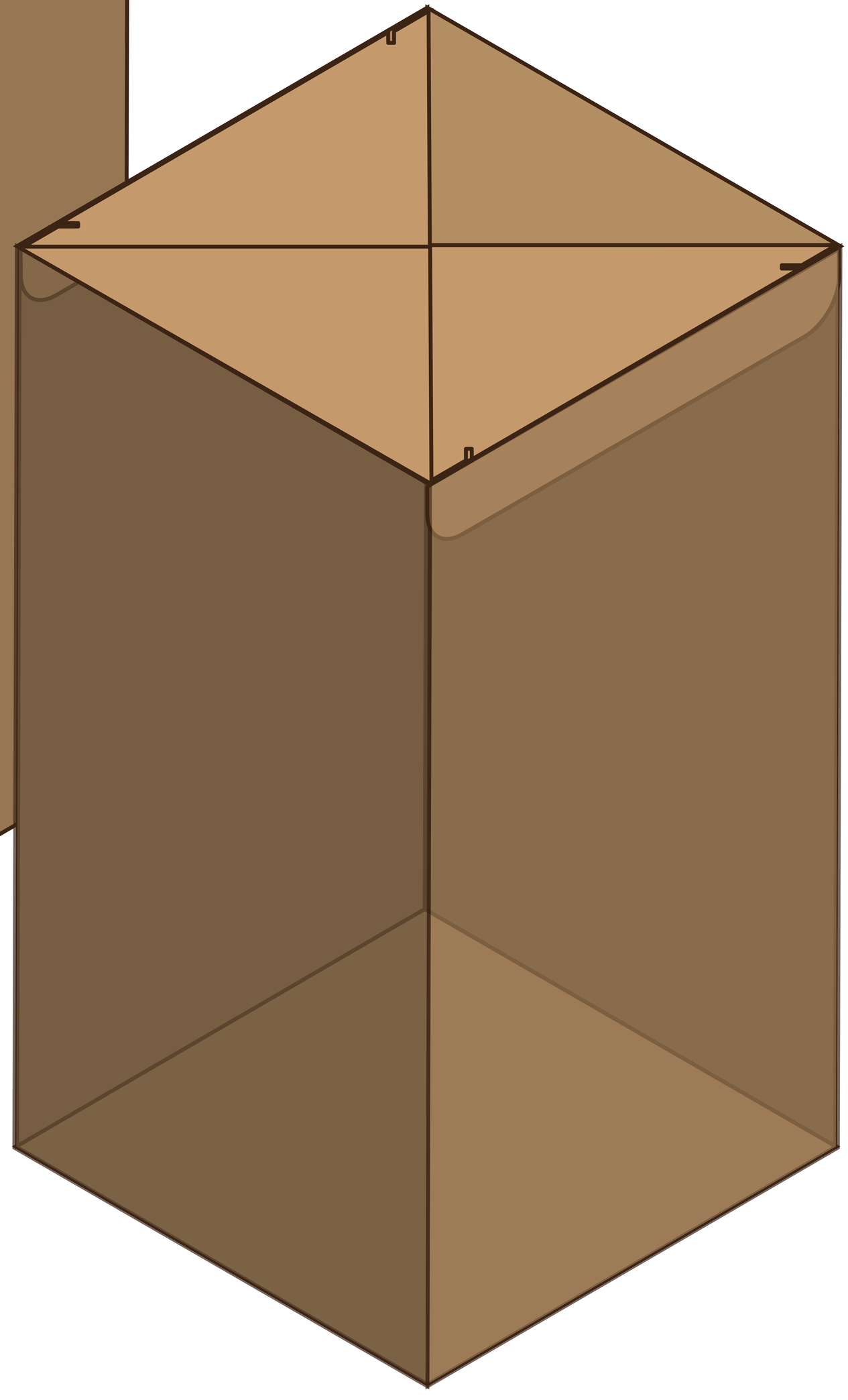

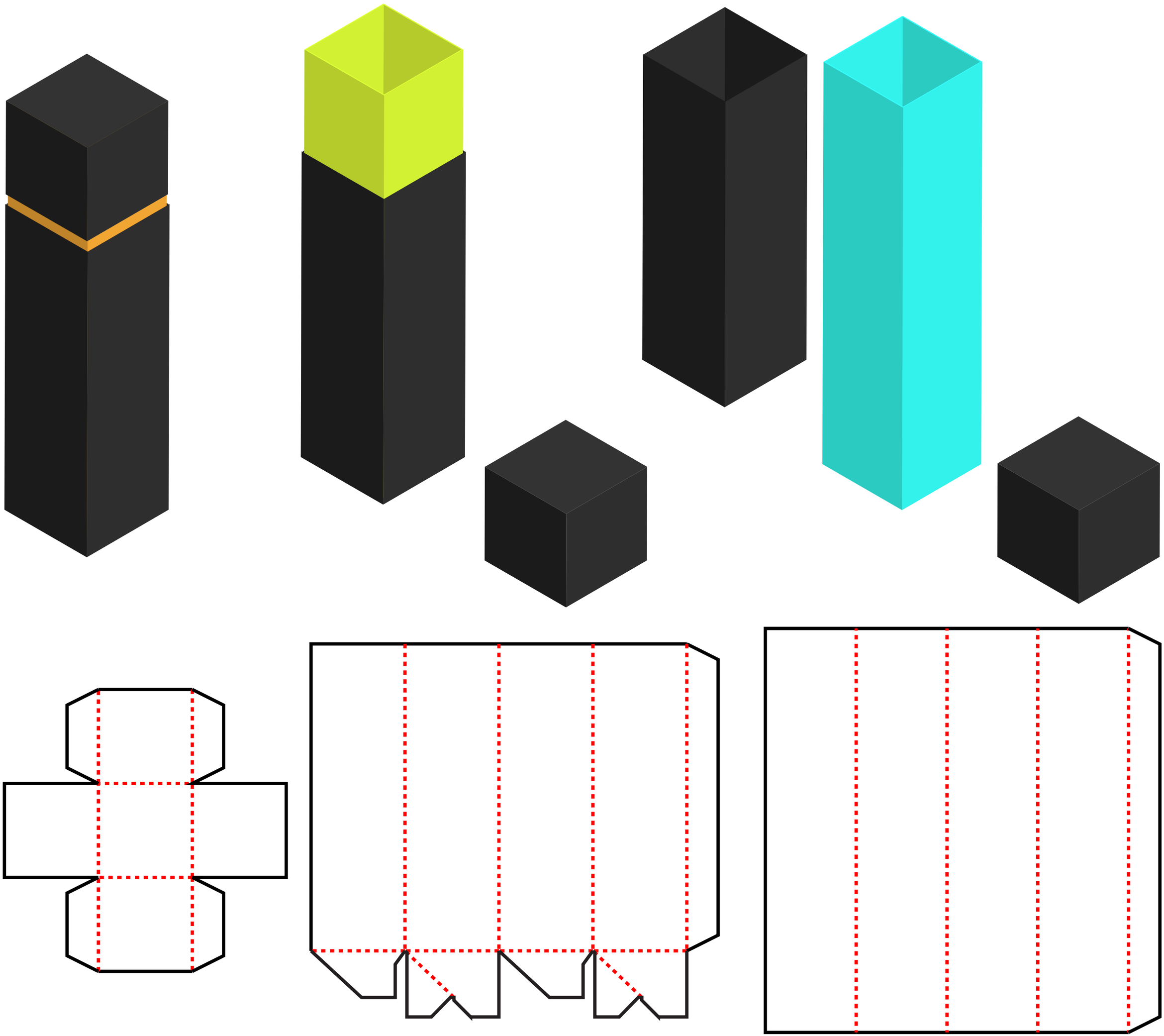

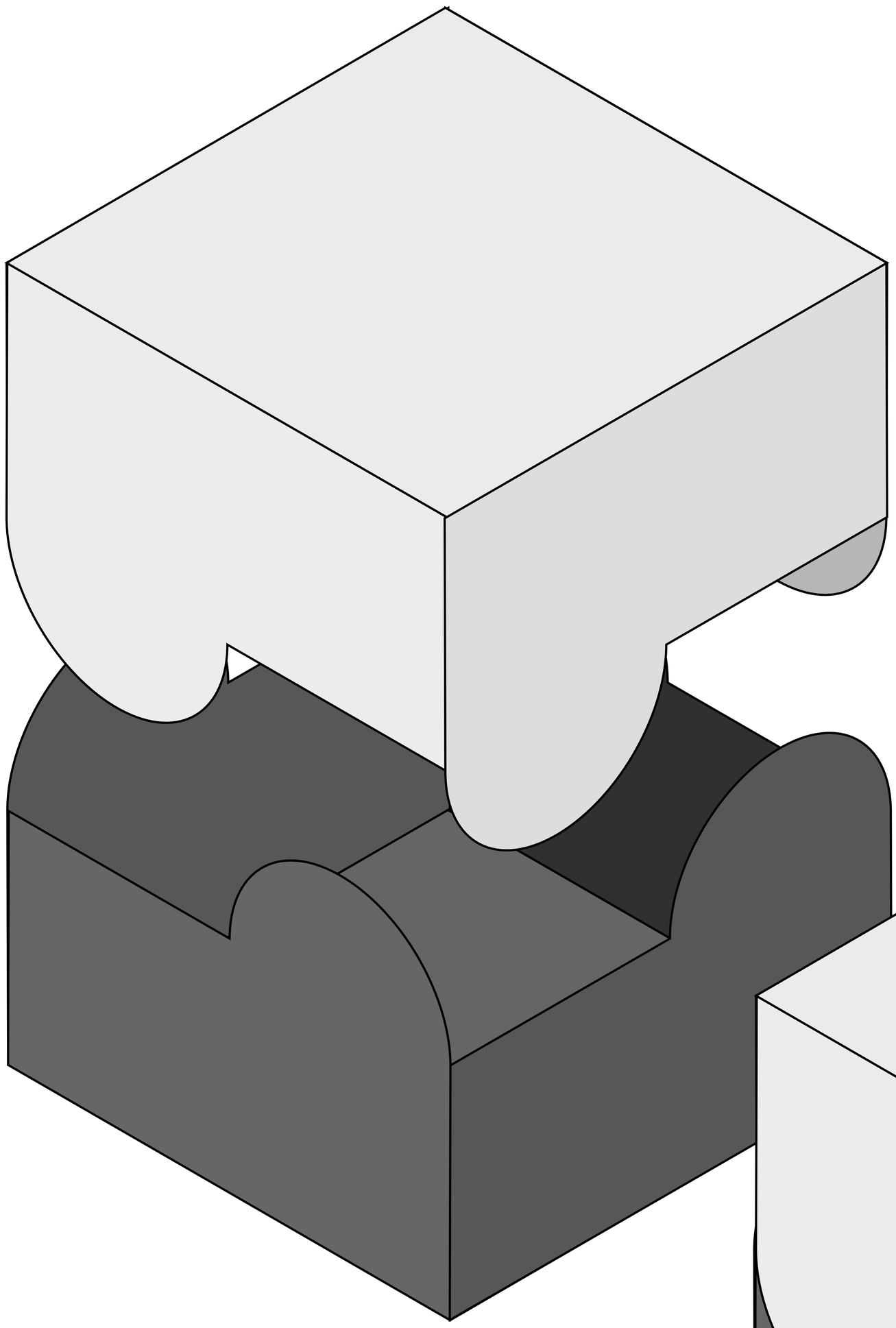

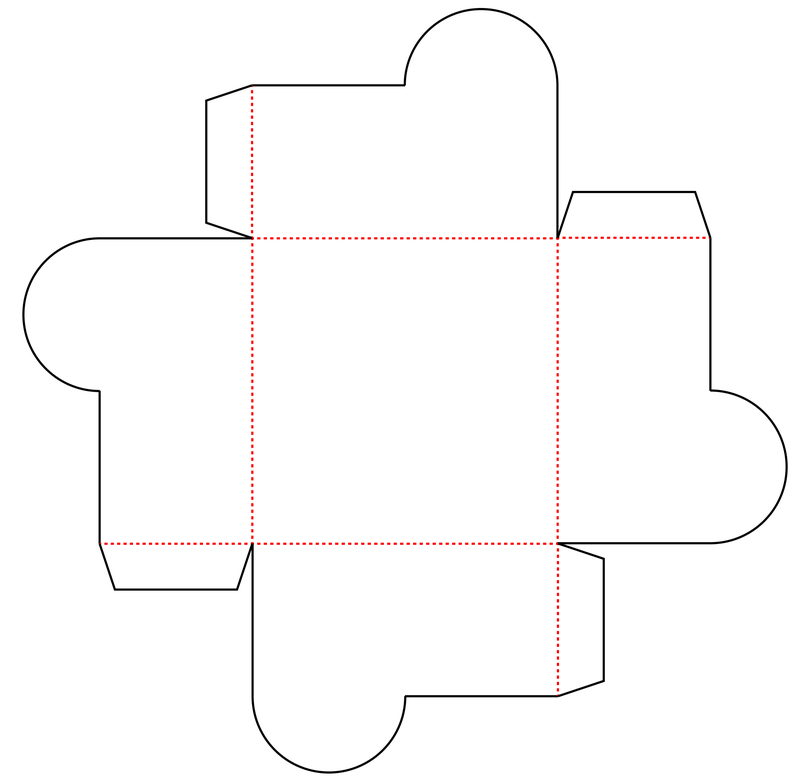

2 Pieces

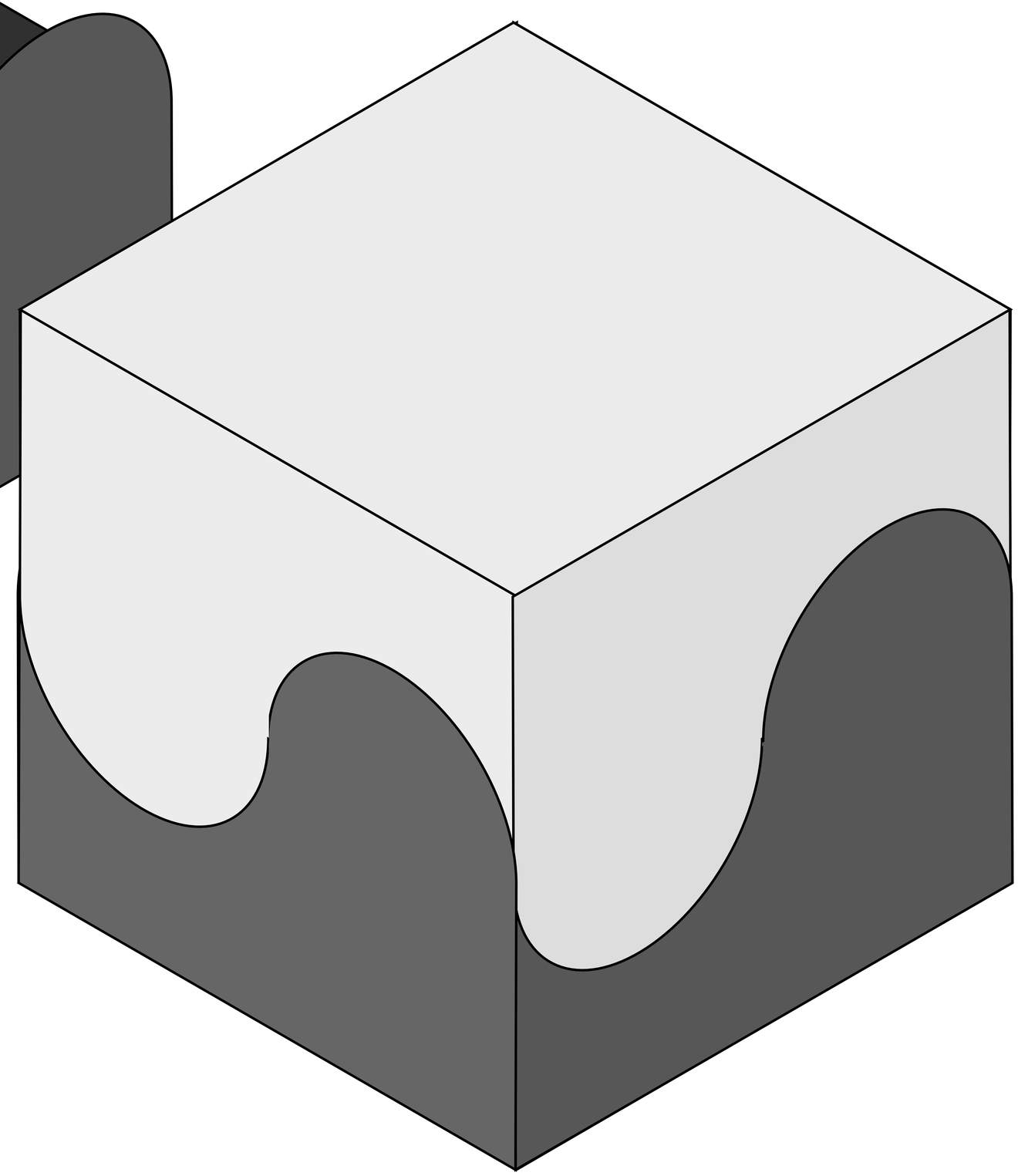

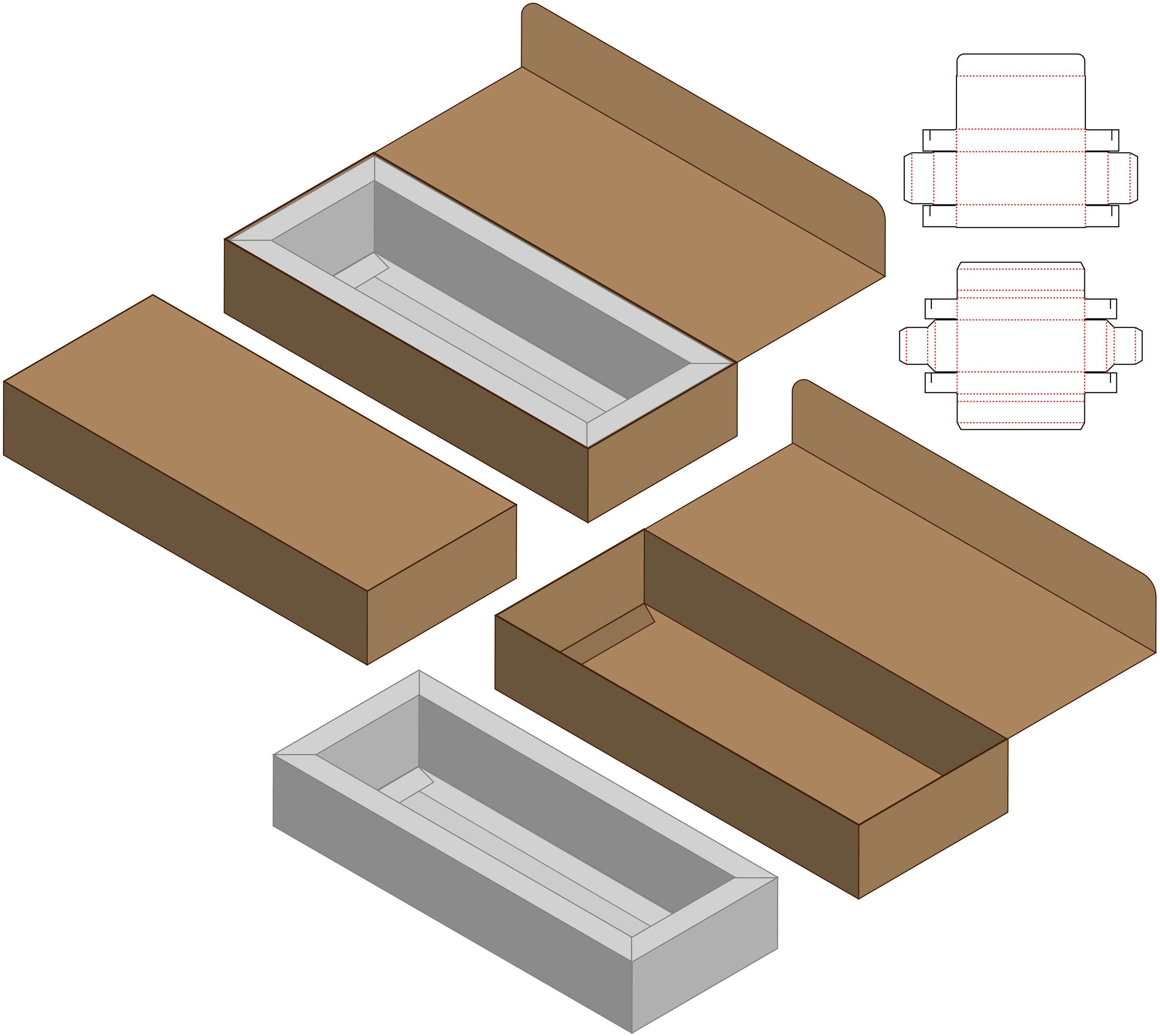

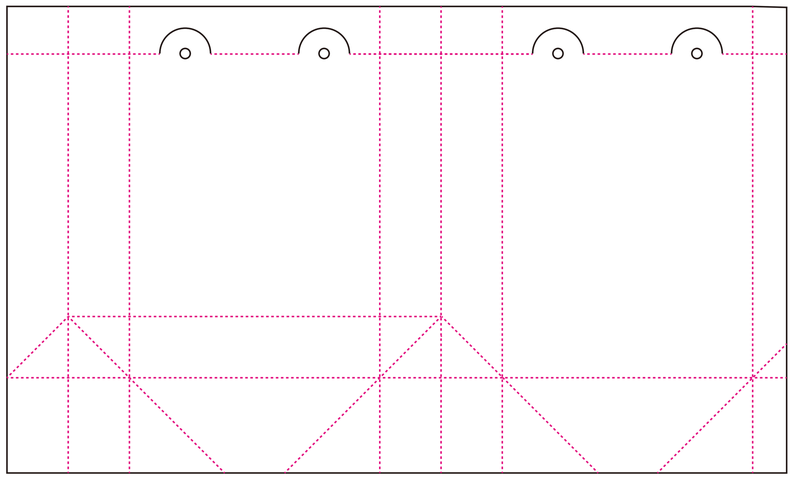

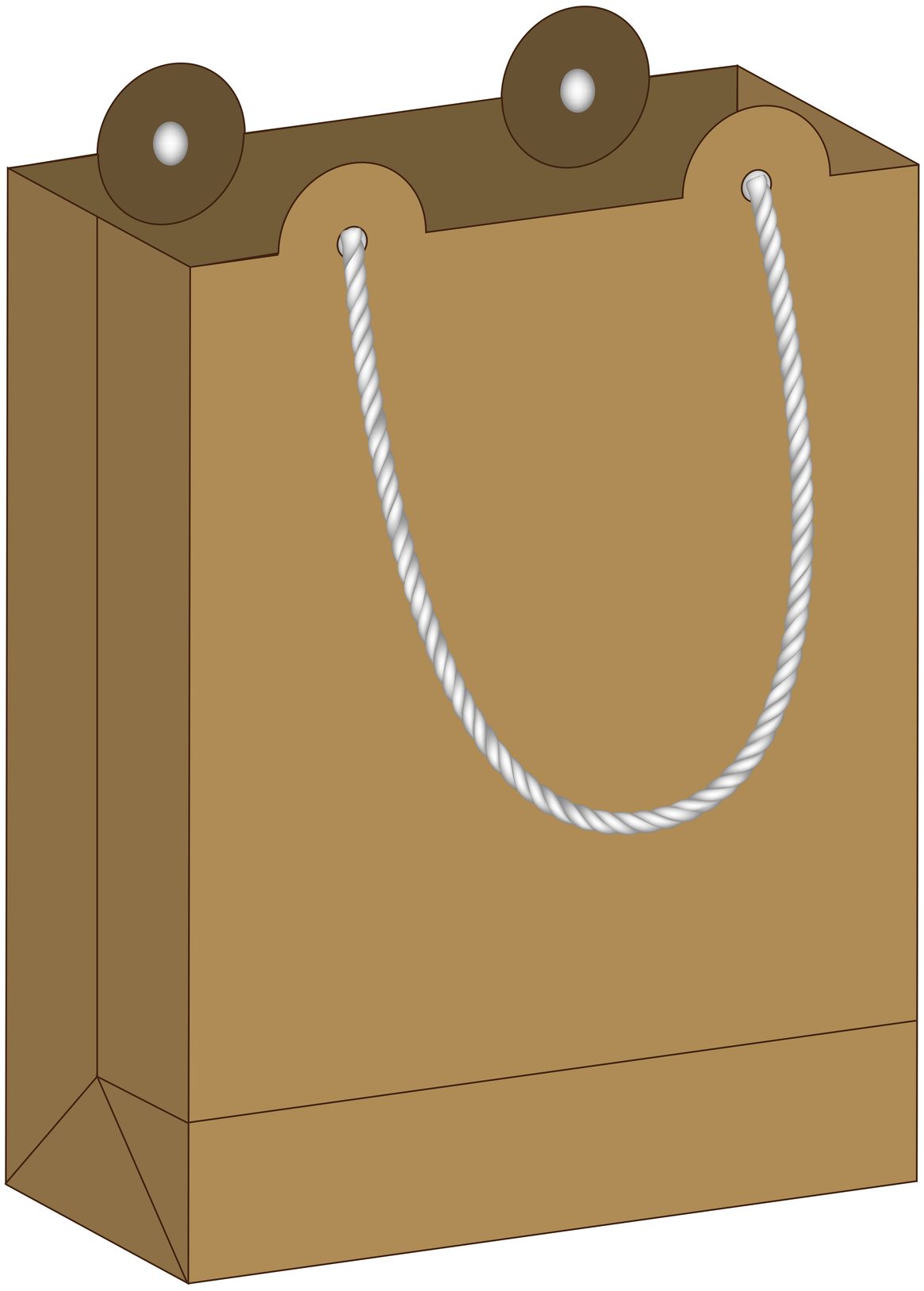

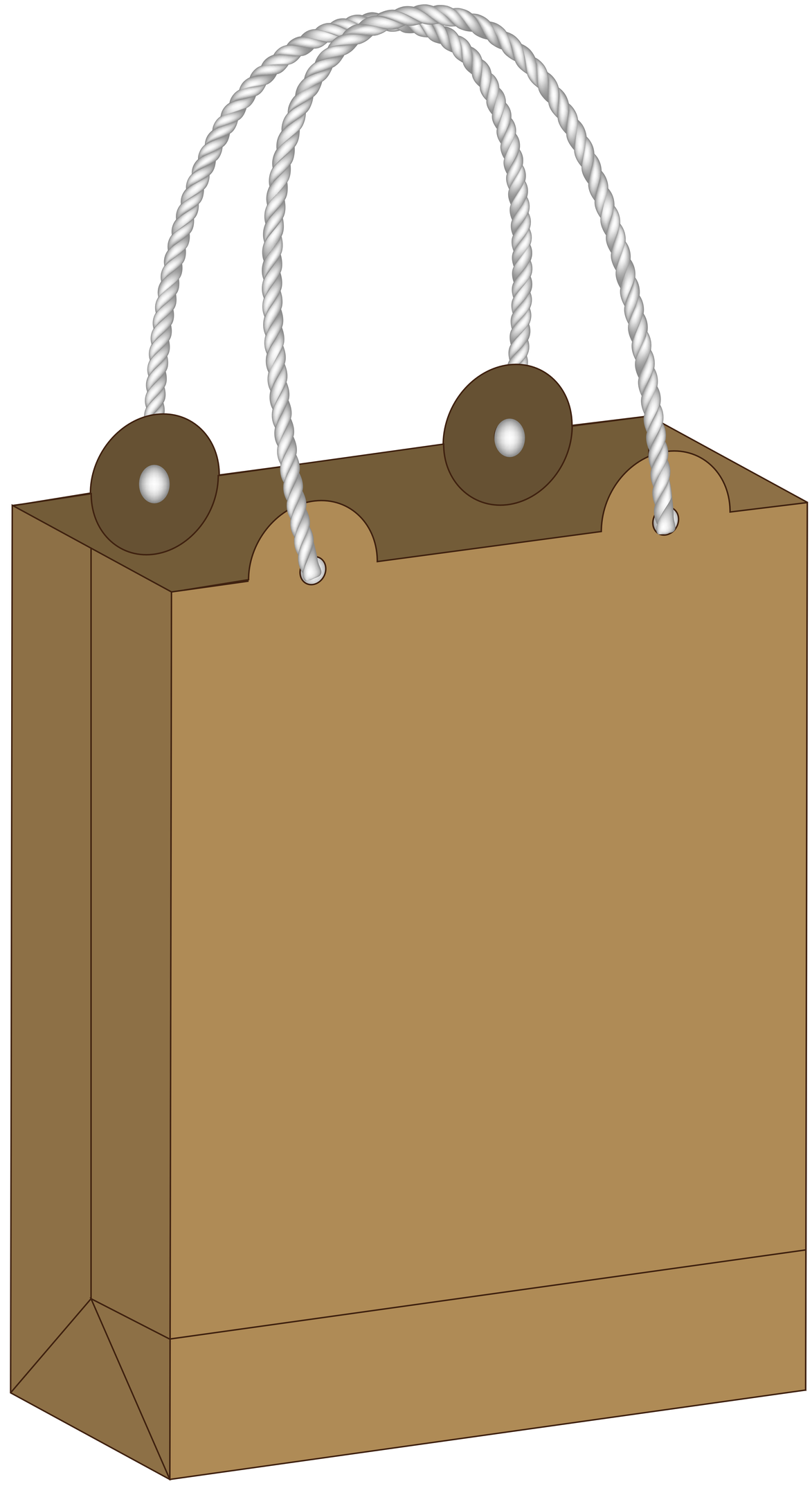

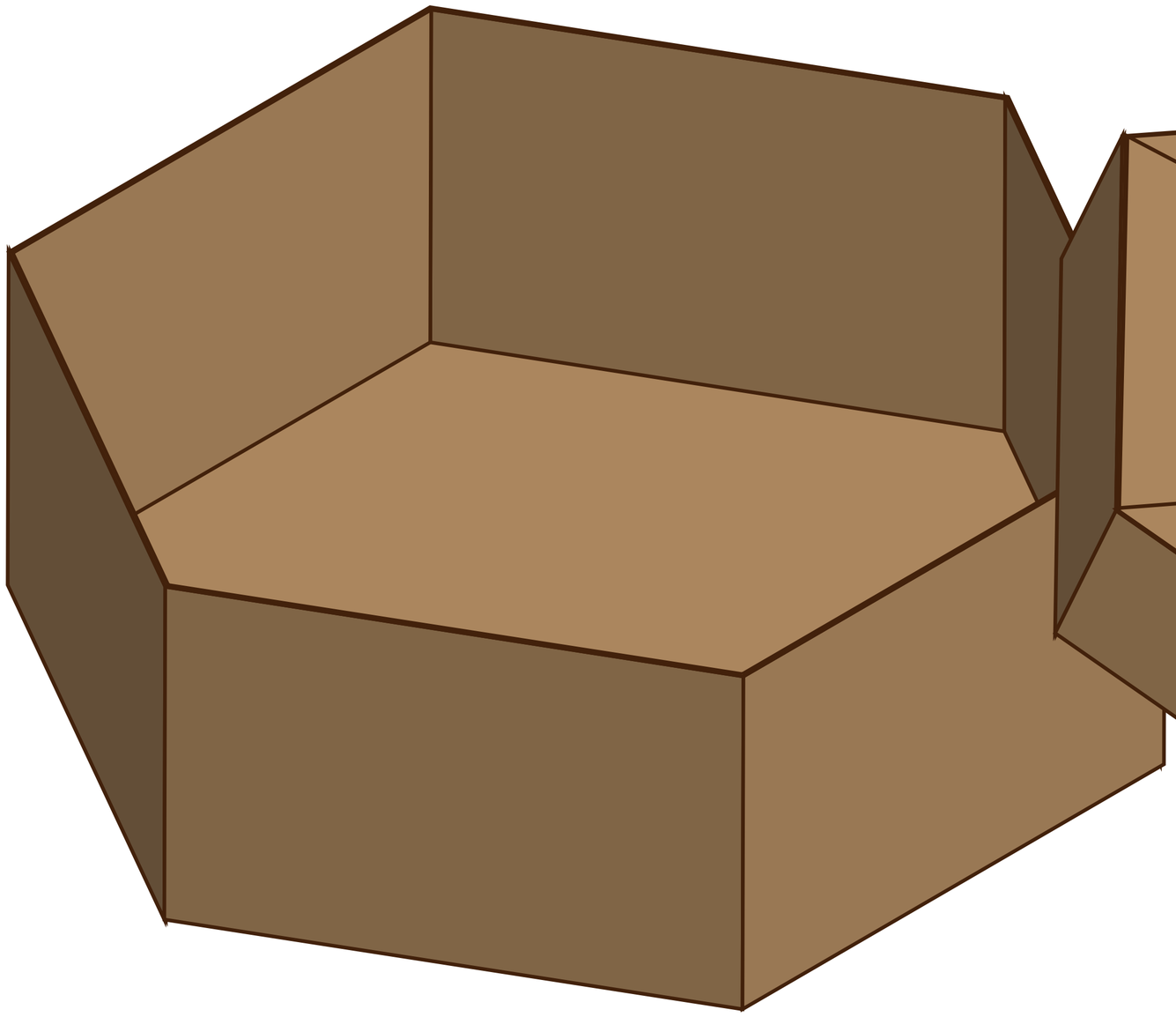

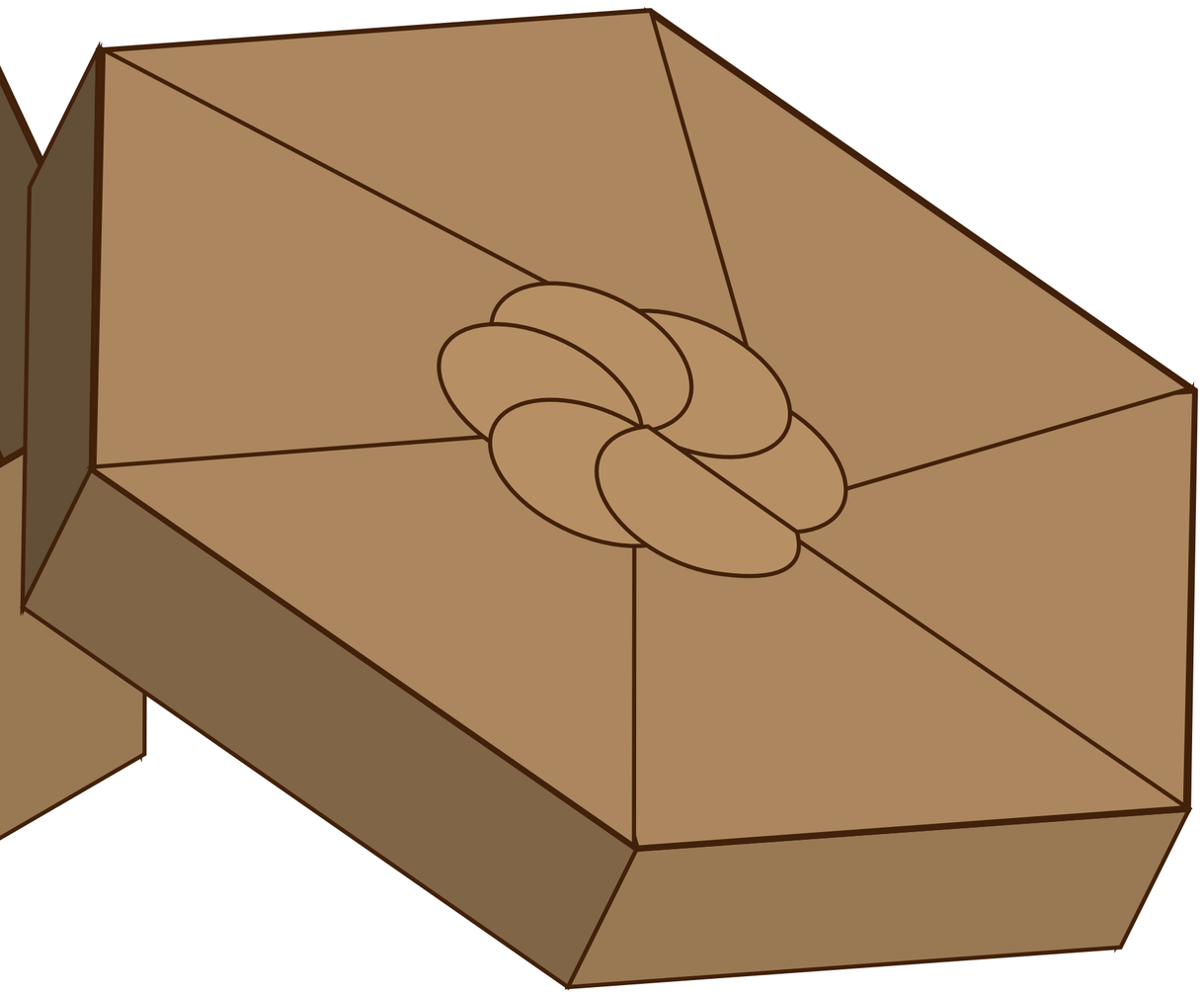

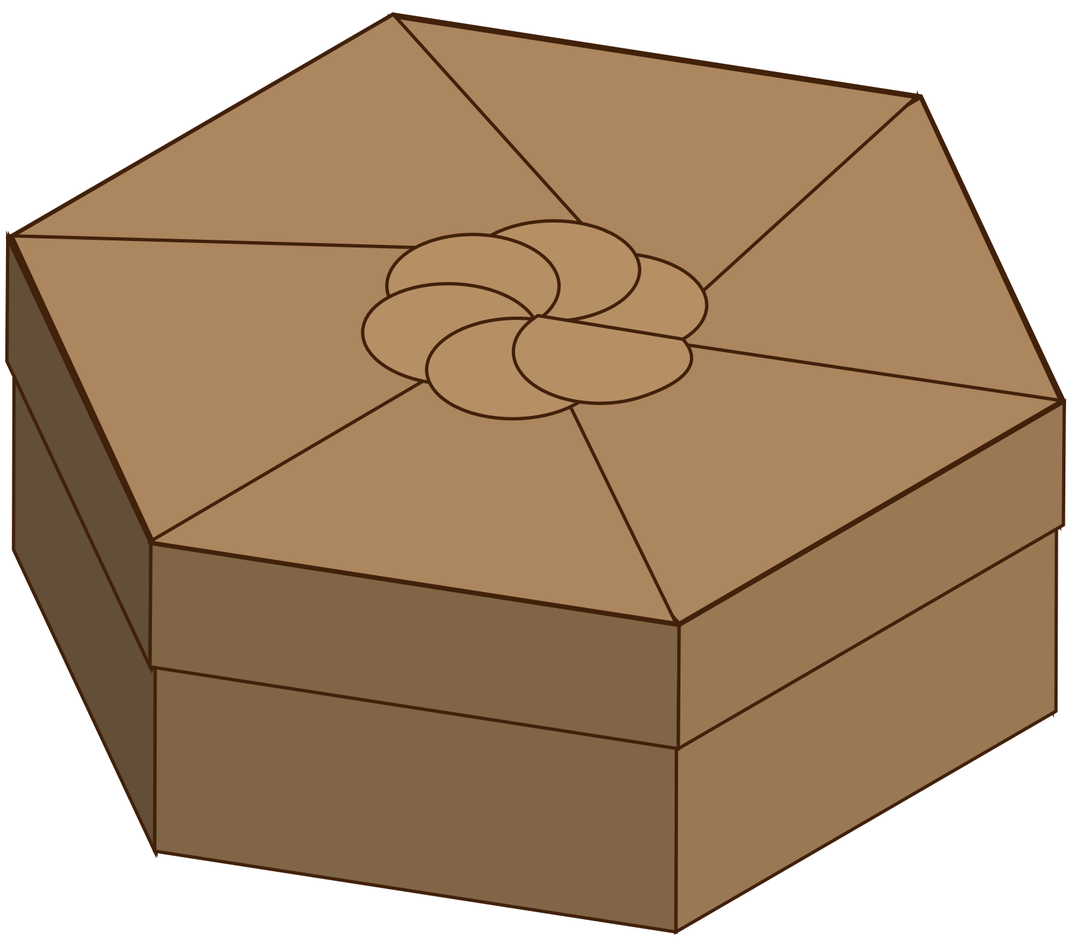

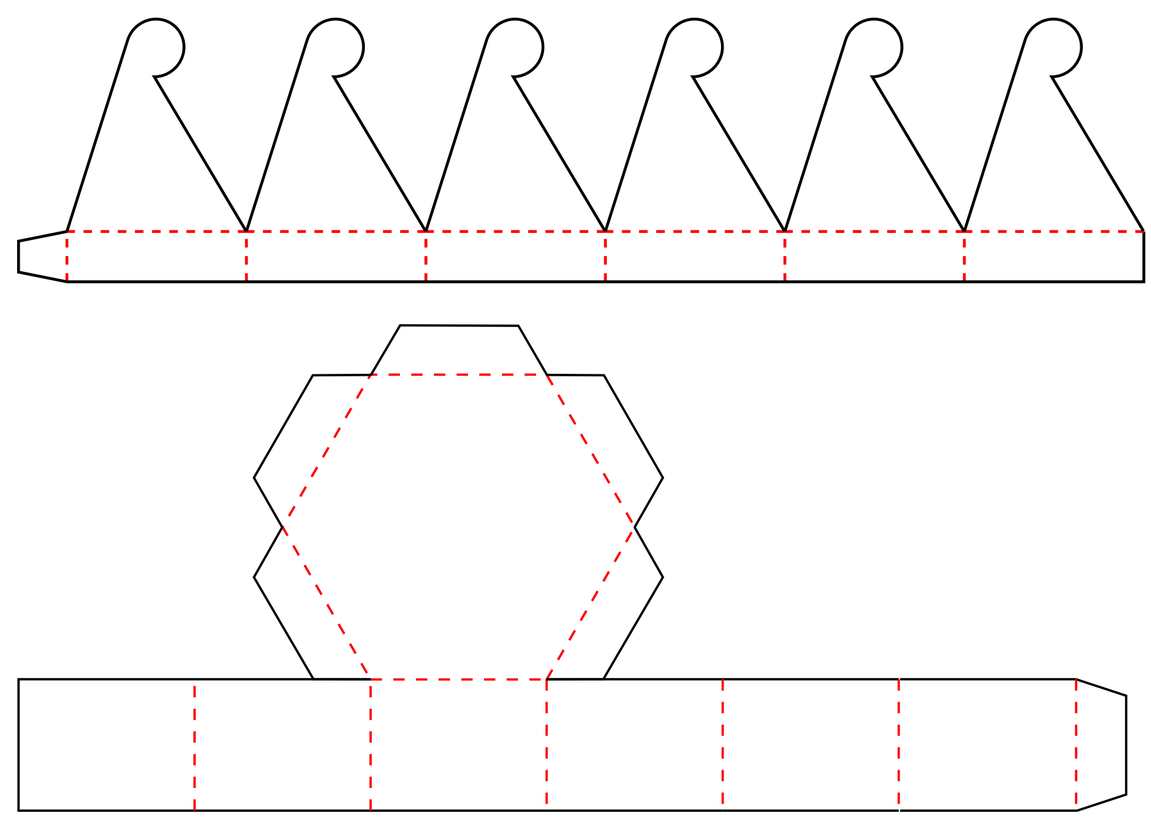

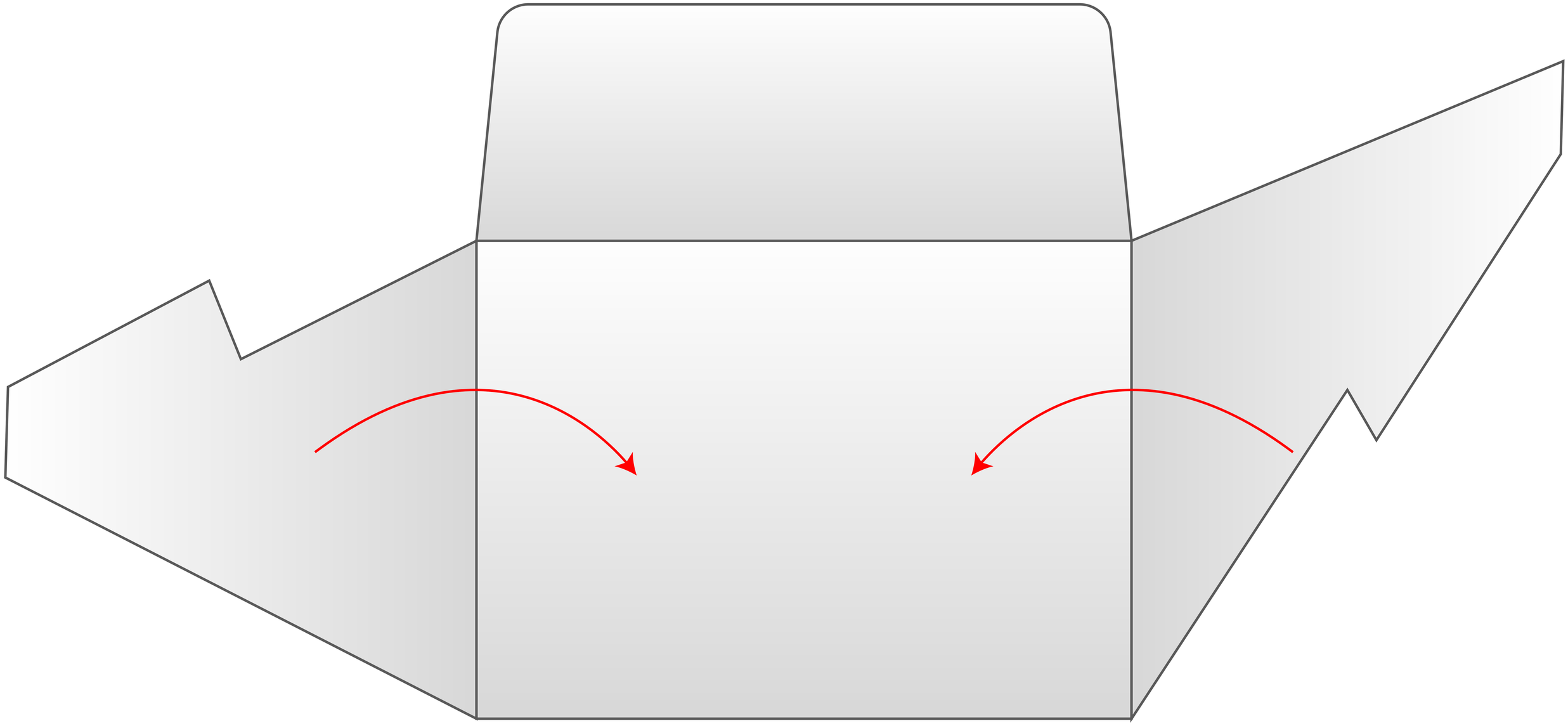

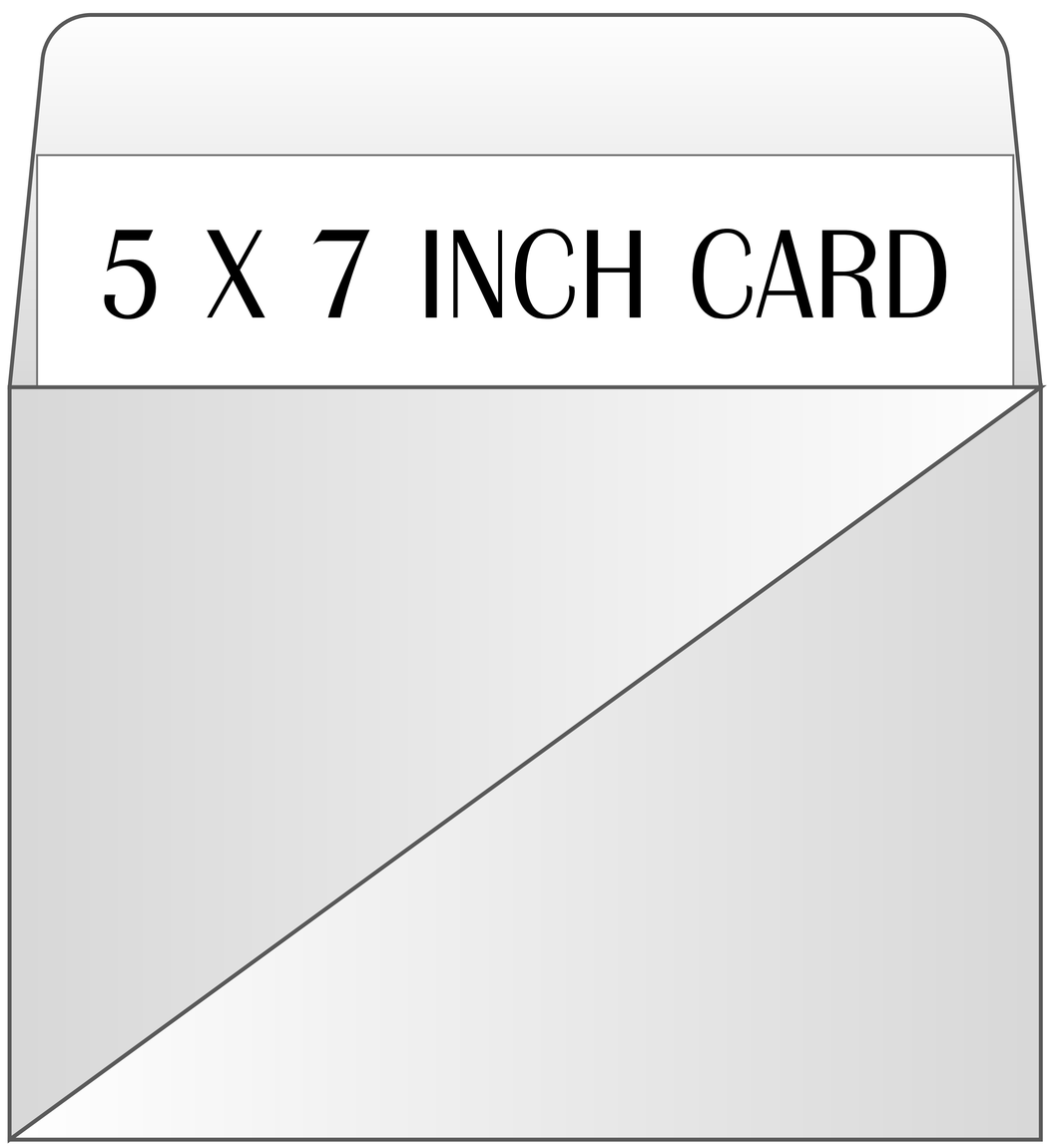
5 X 7 INCH CARD

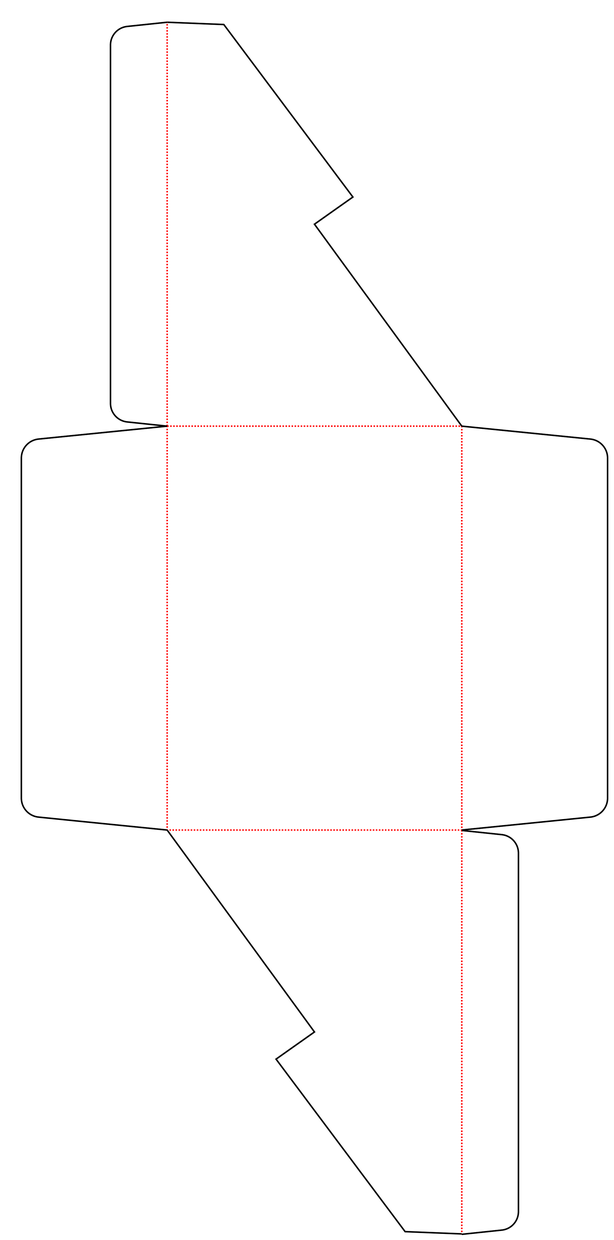

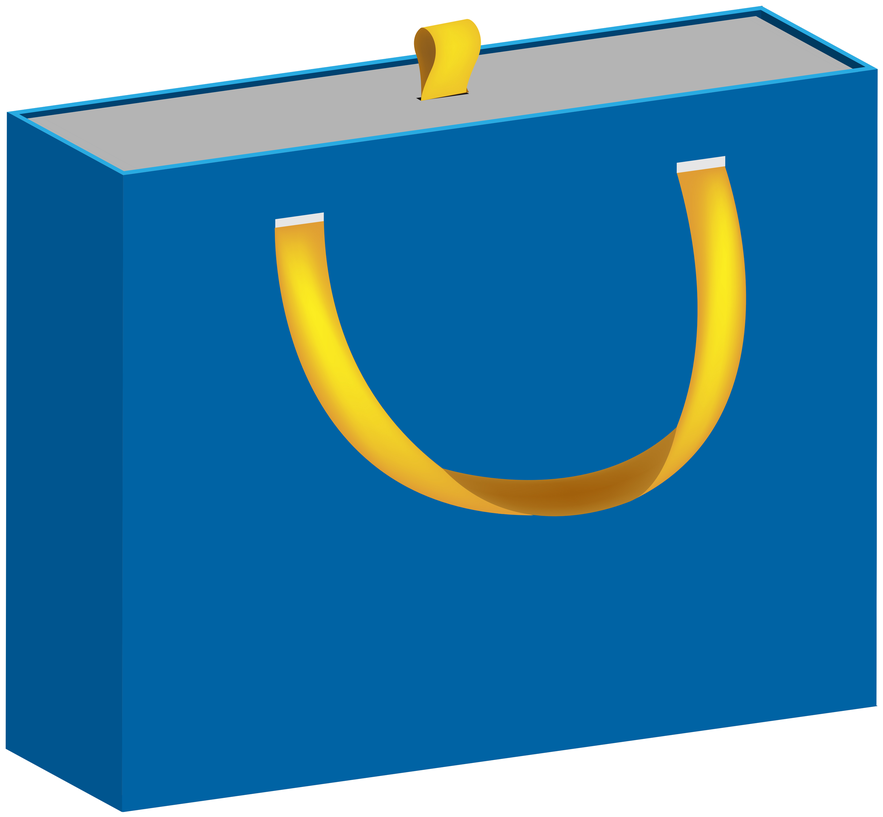

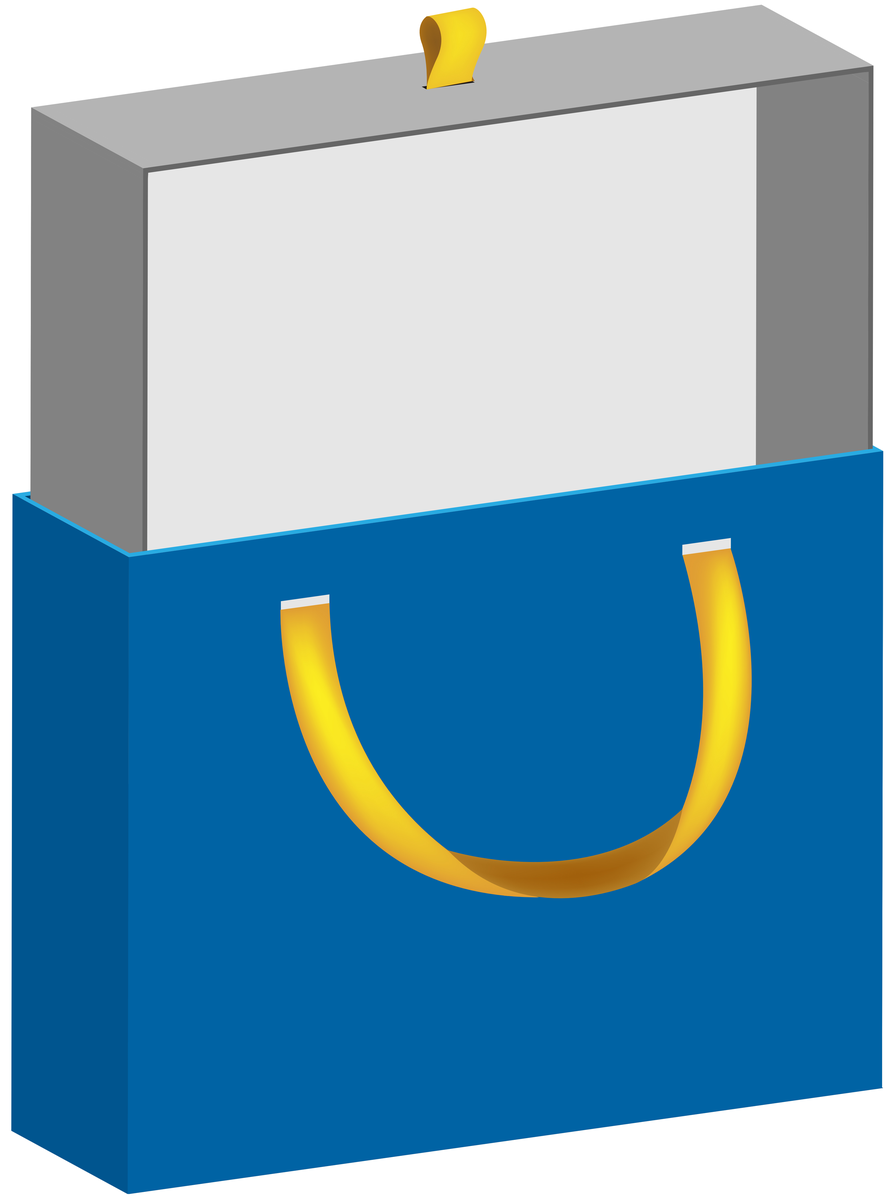

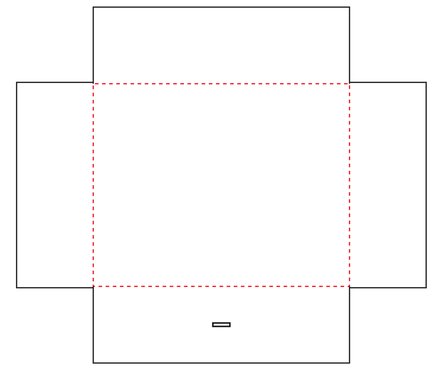

Hard Board Paper
Thick 0.2 cm
Sleeve Box

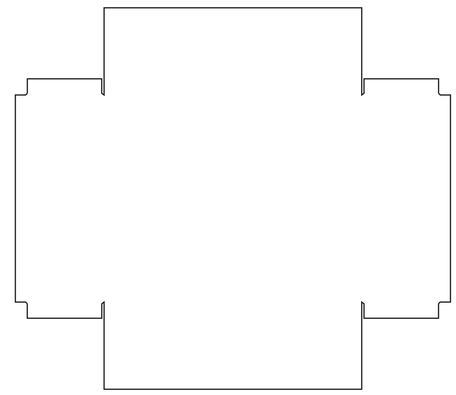

Wrapping Paper
Sleeve Box

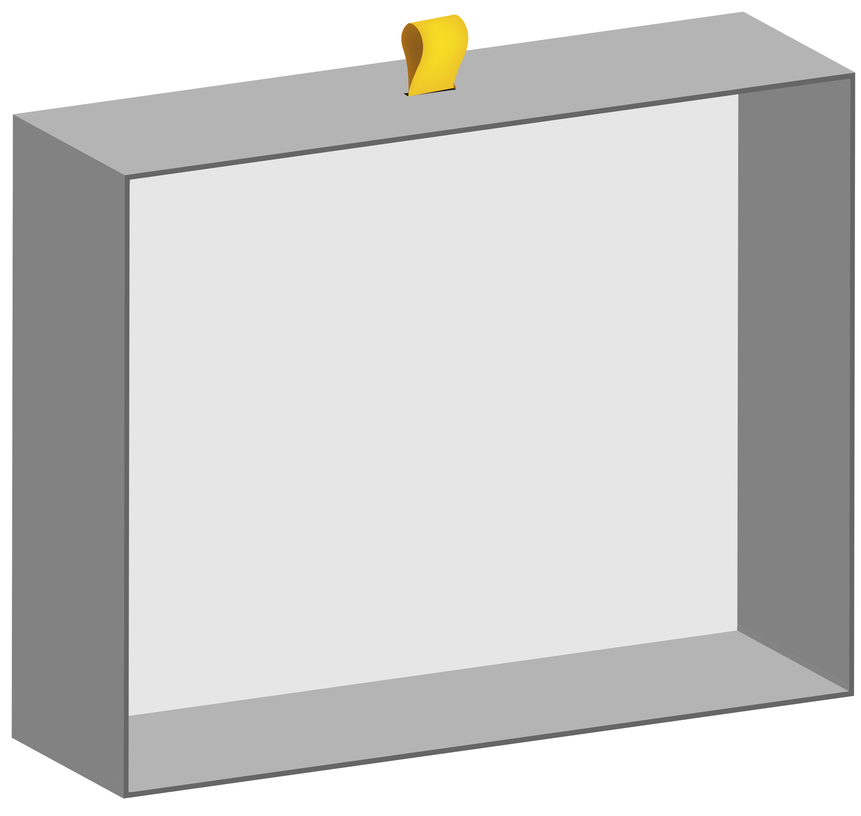

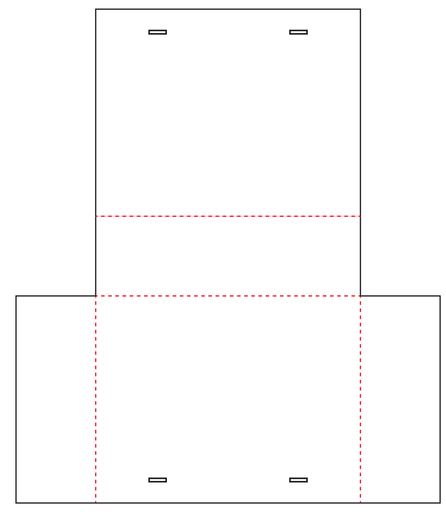

Hard Board Paper
Thick 0.2 cm
Box

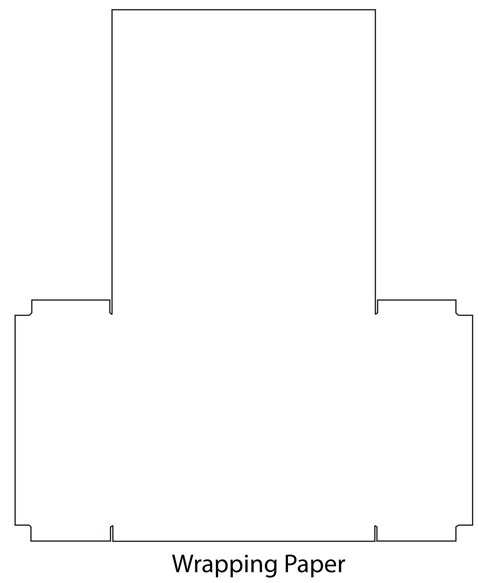
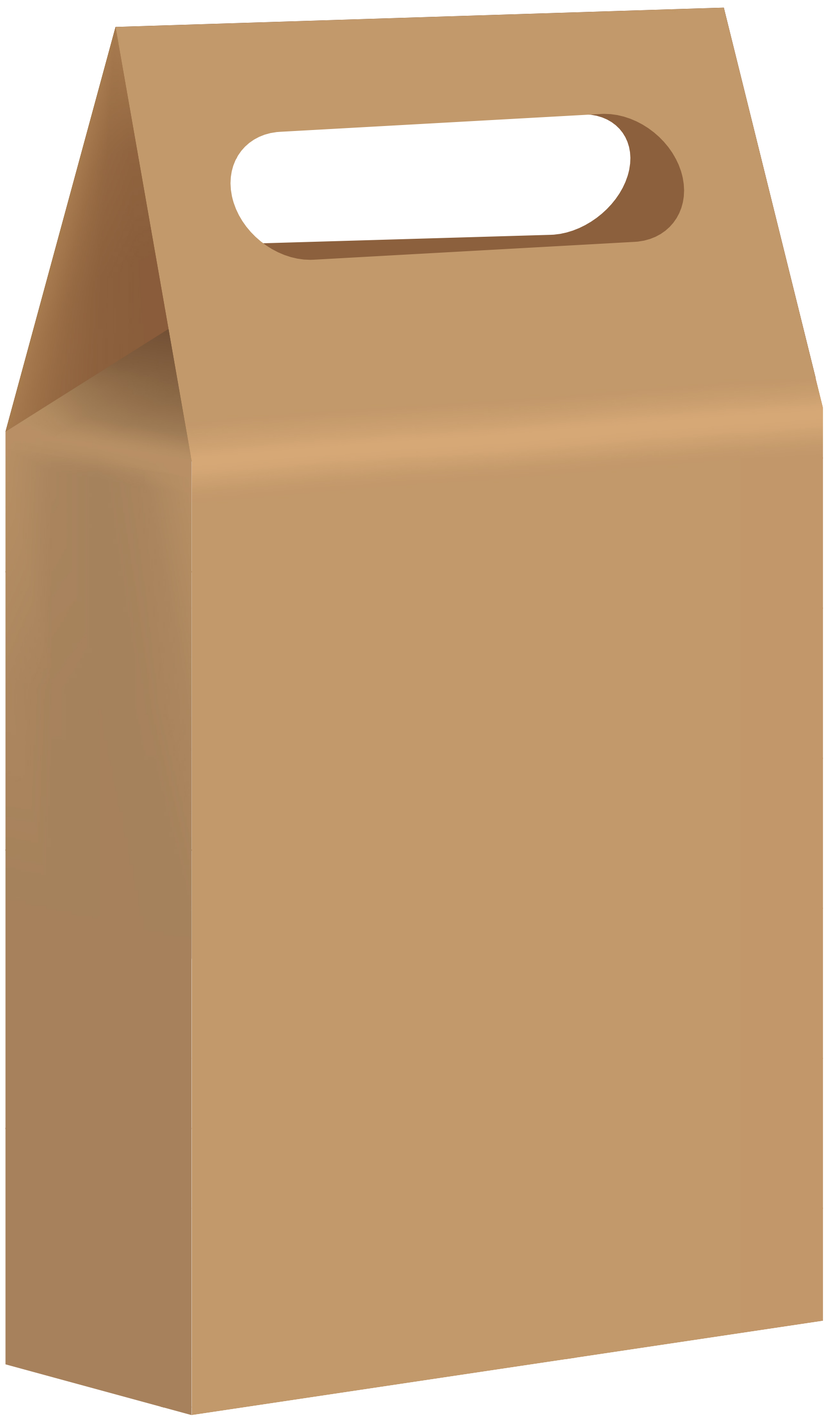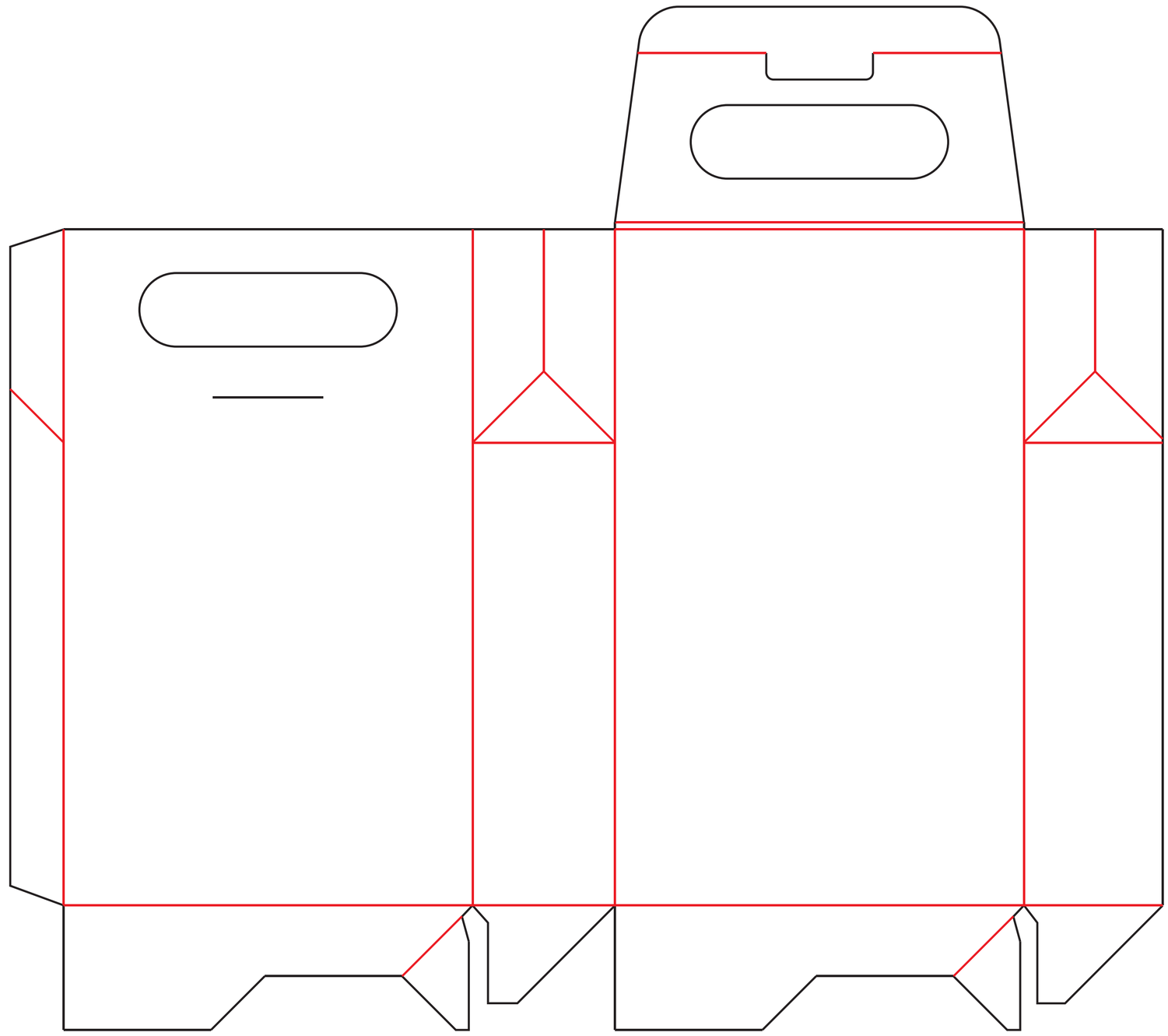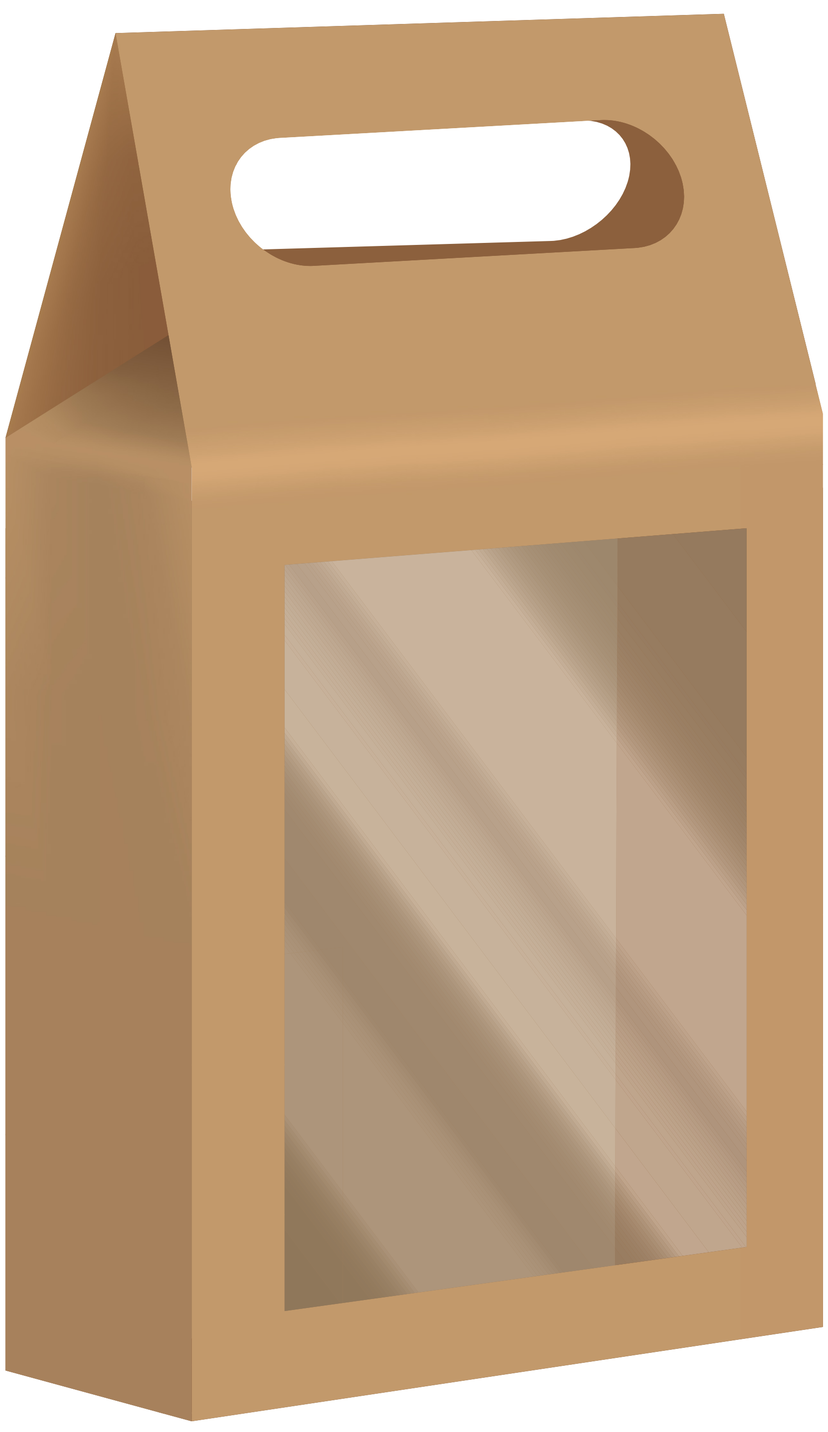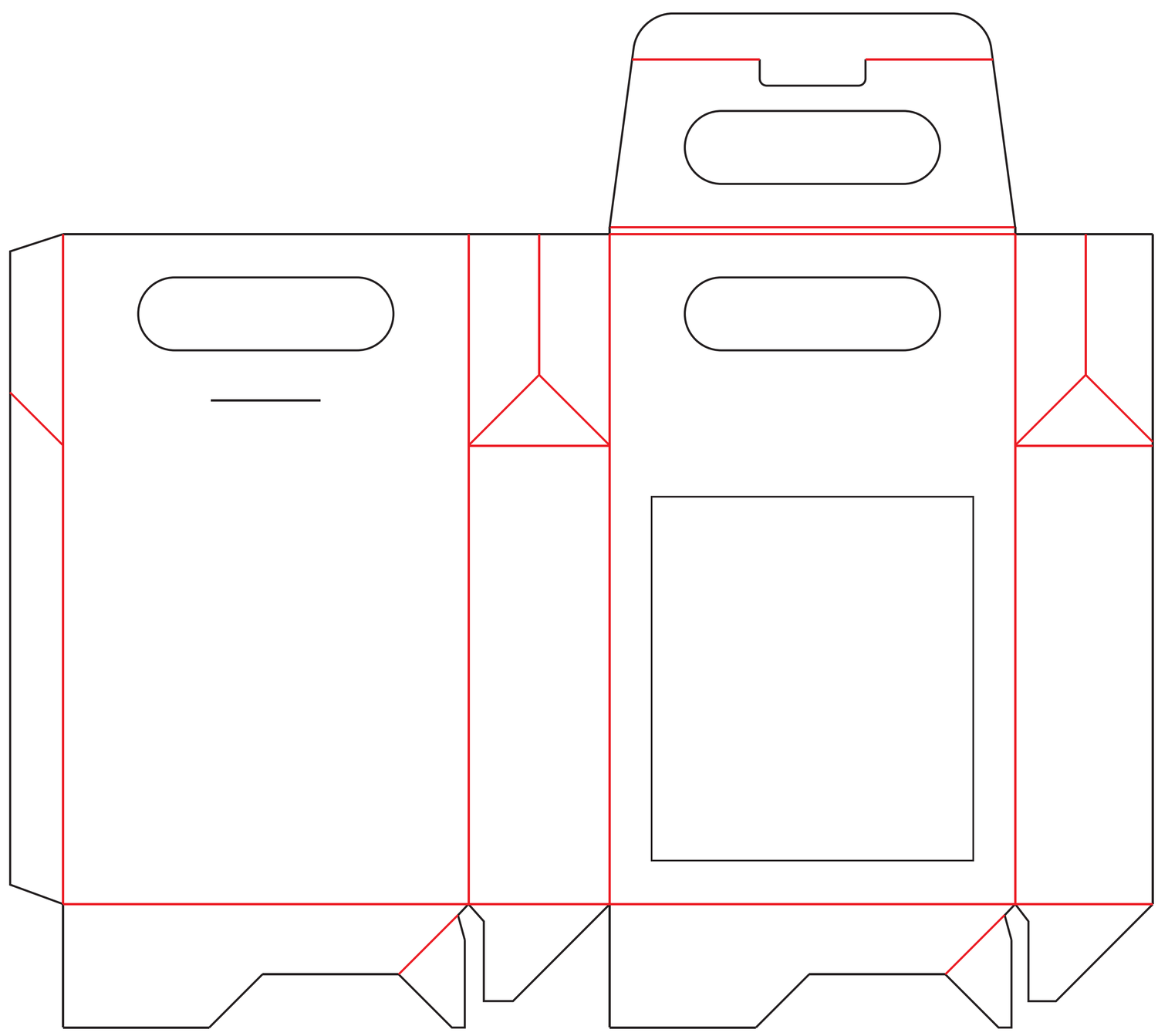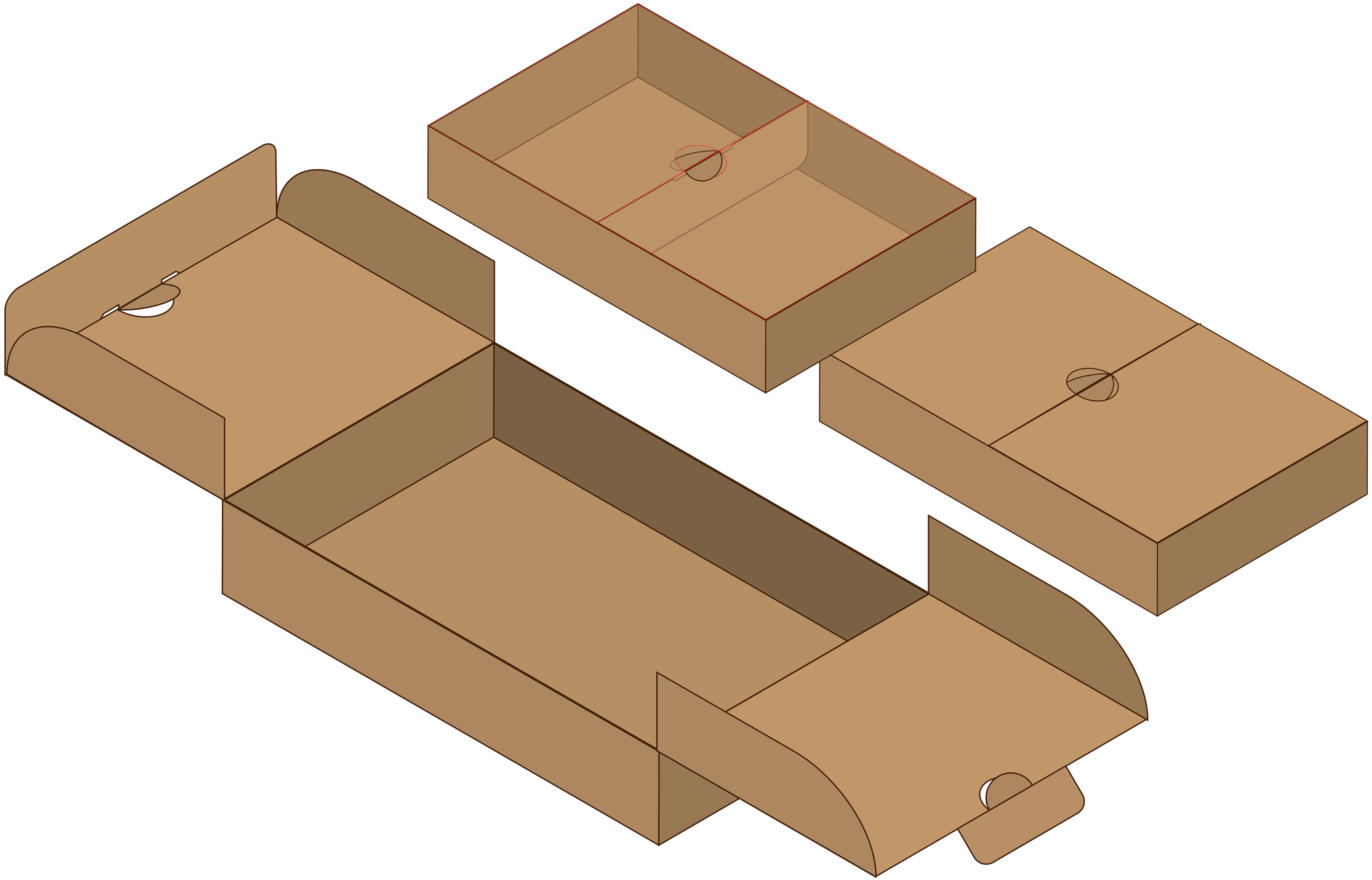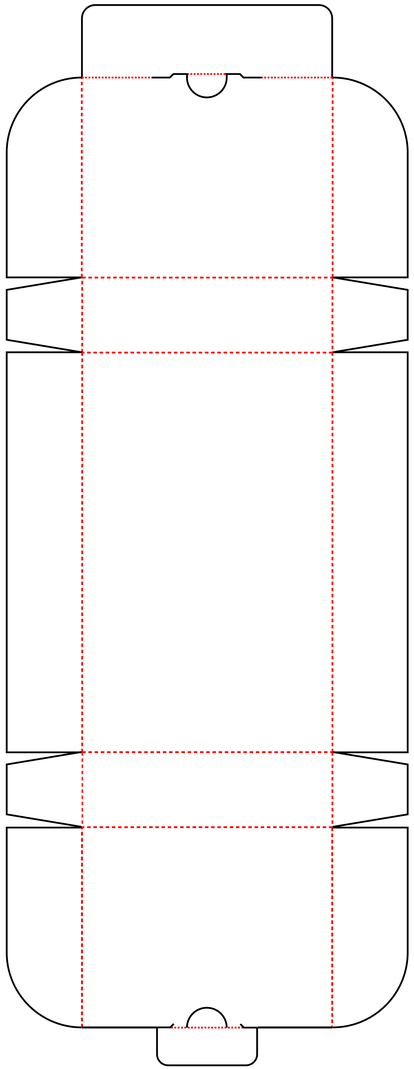
Wrapping Paper
Box