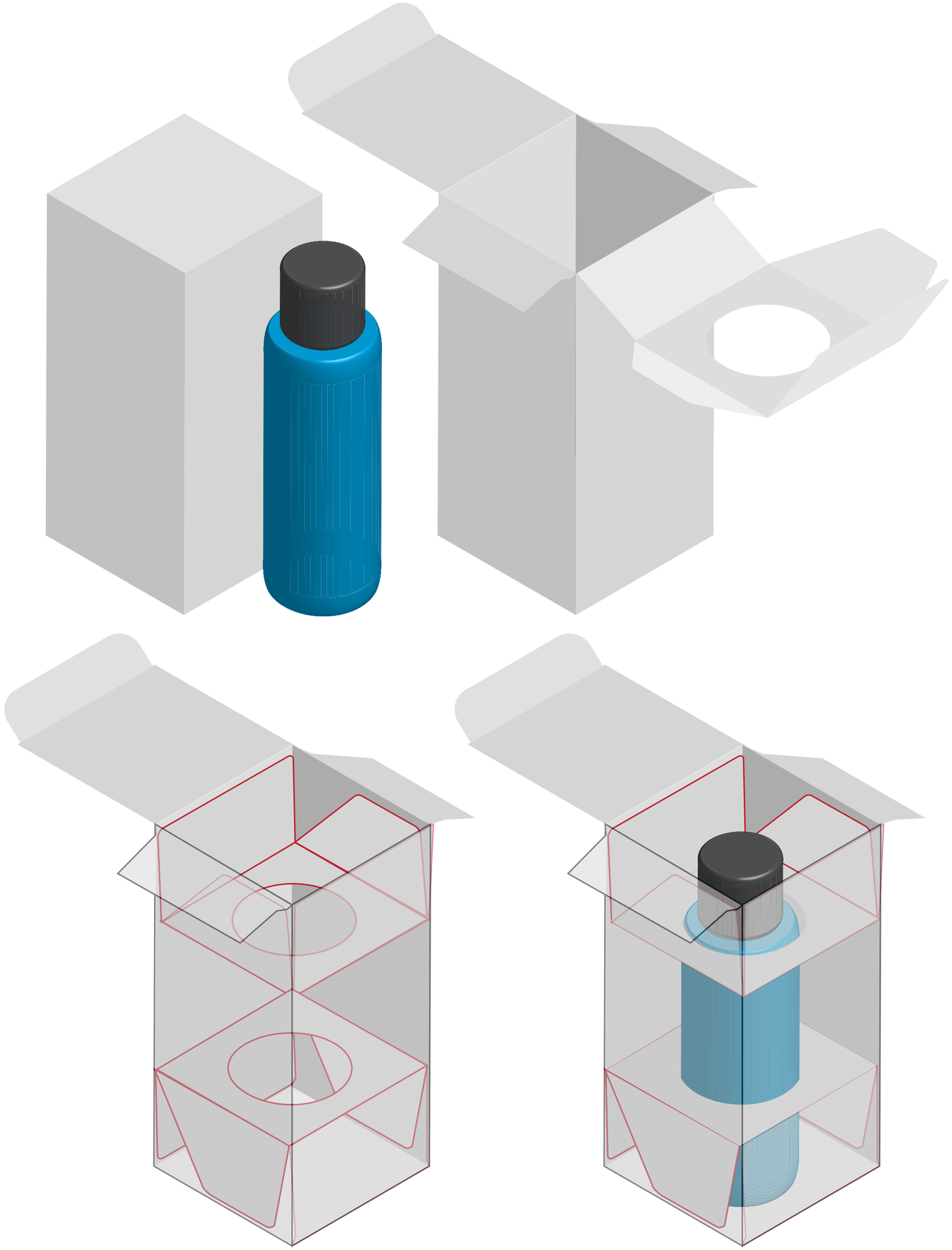

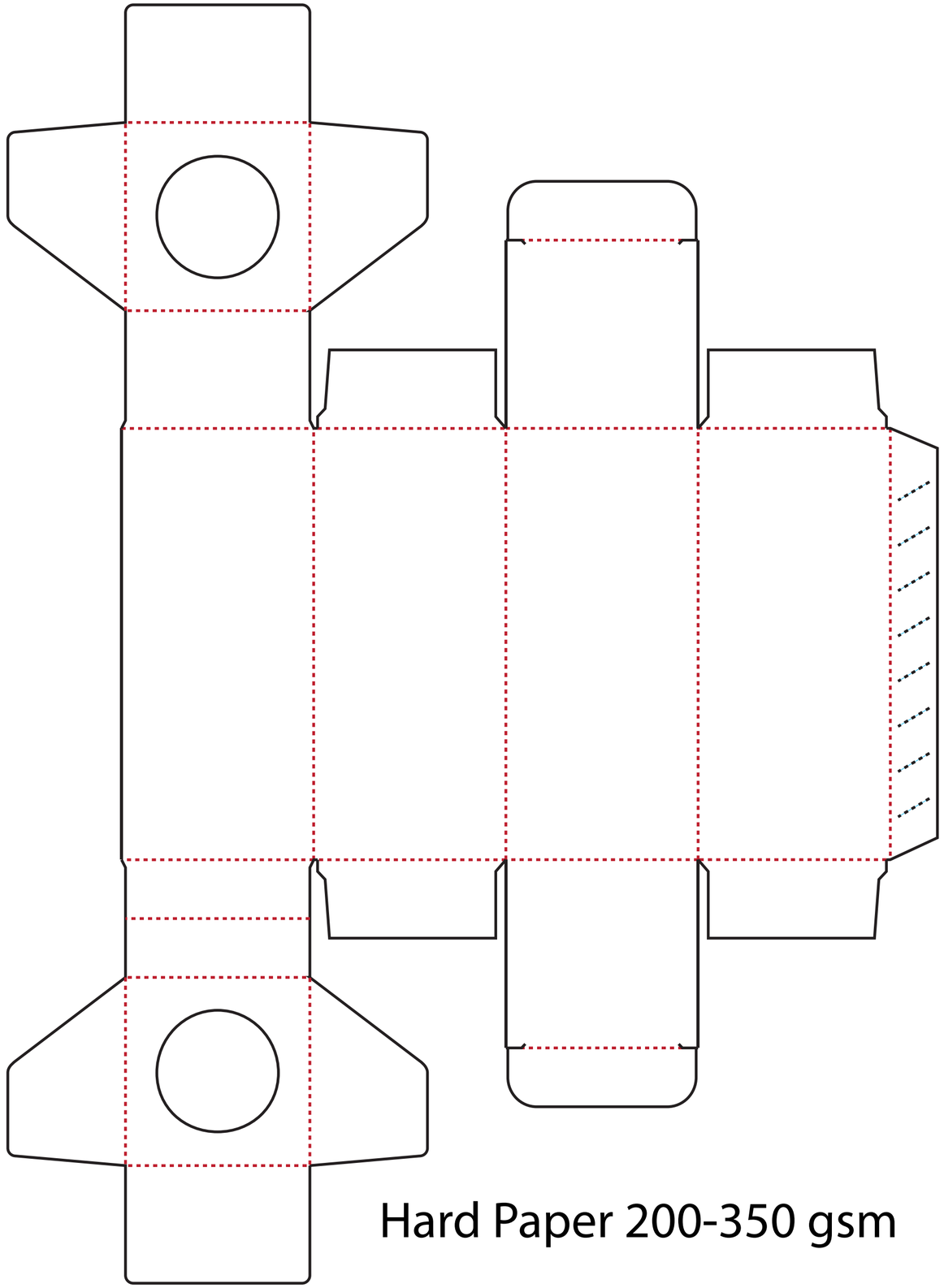
Hard Paper 200-350 gsm

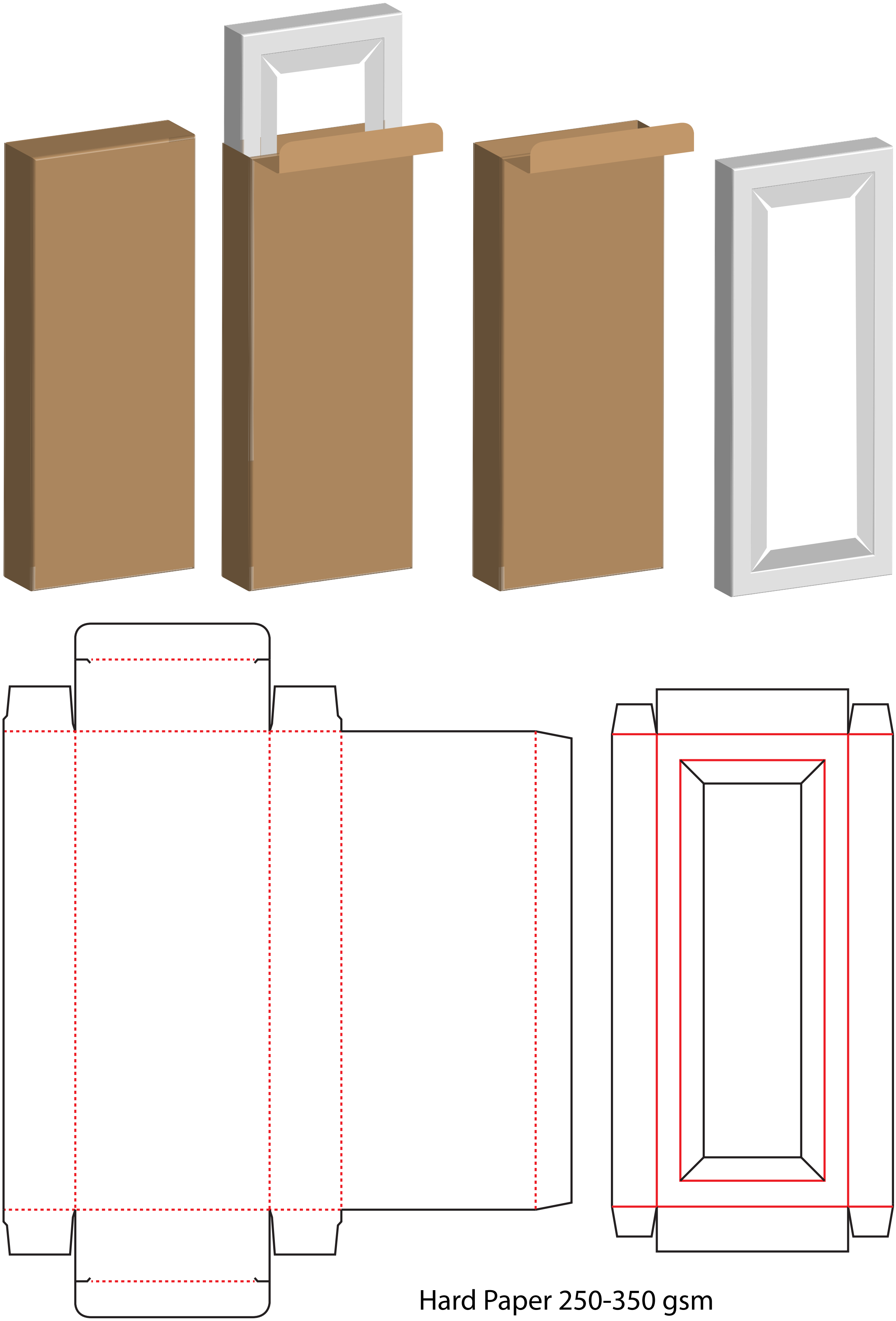

Hard Paper 250-350 gsm

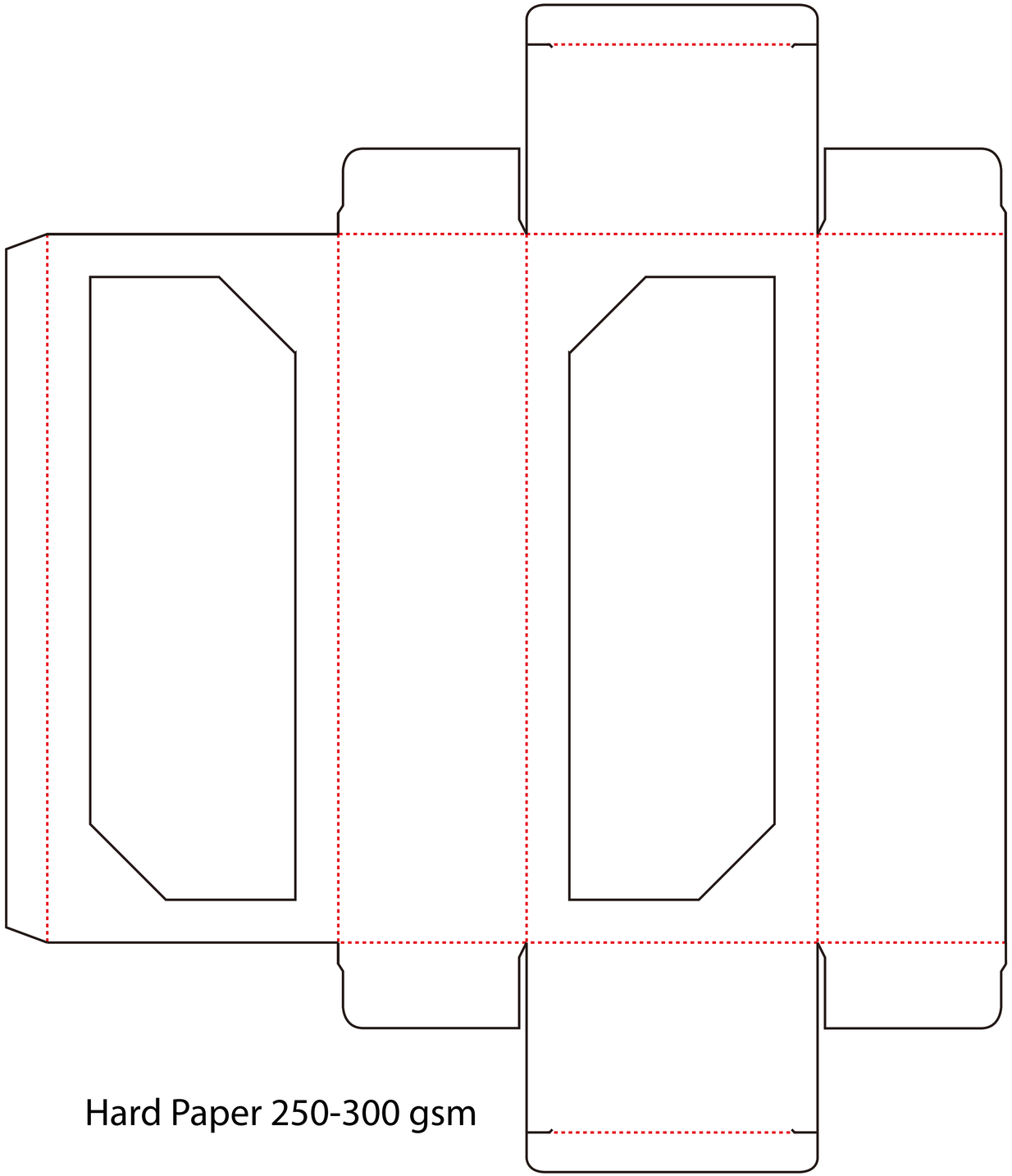

Hard Paper 250-300 gsm

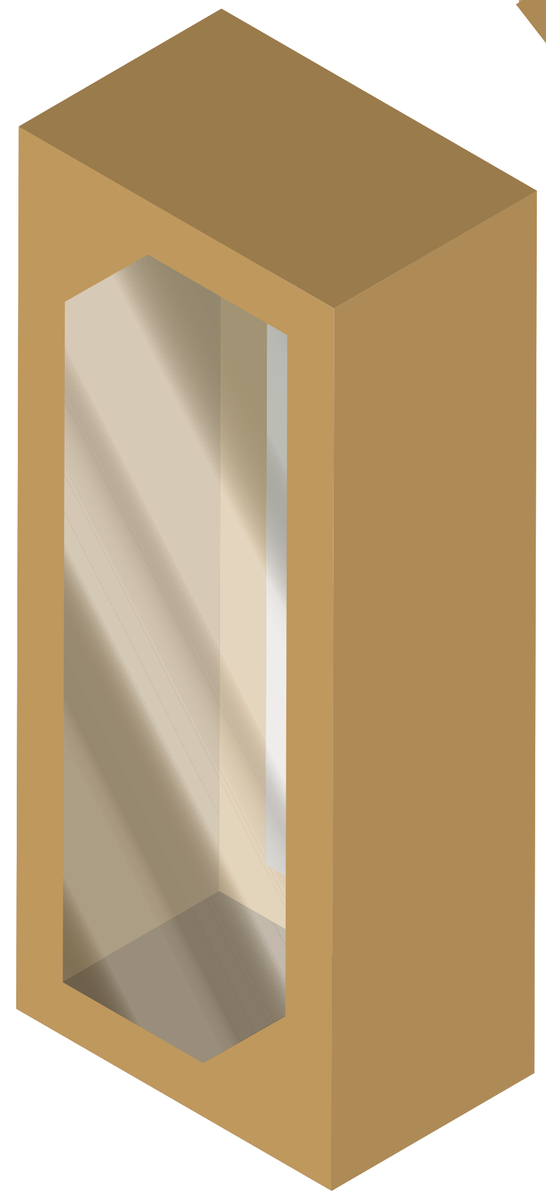

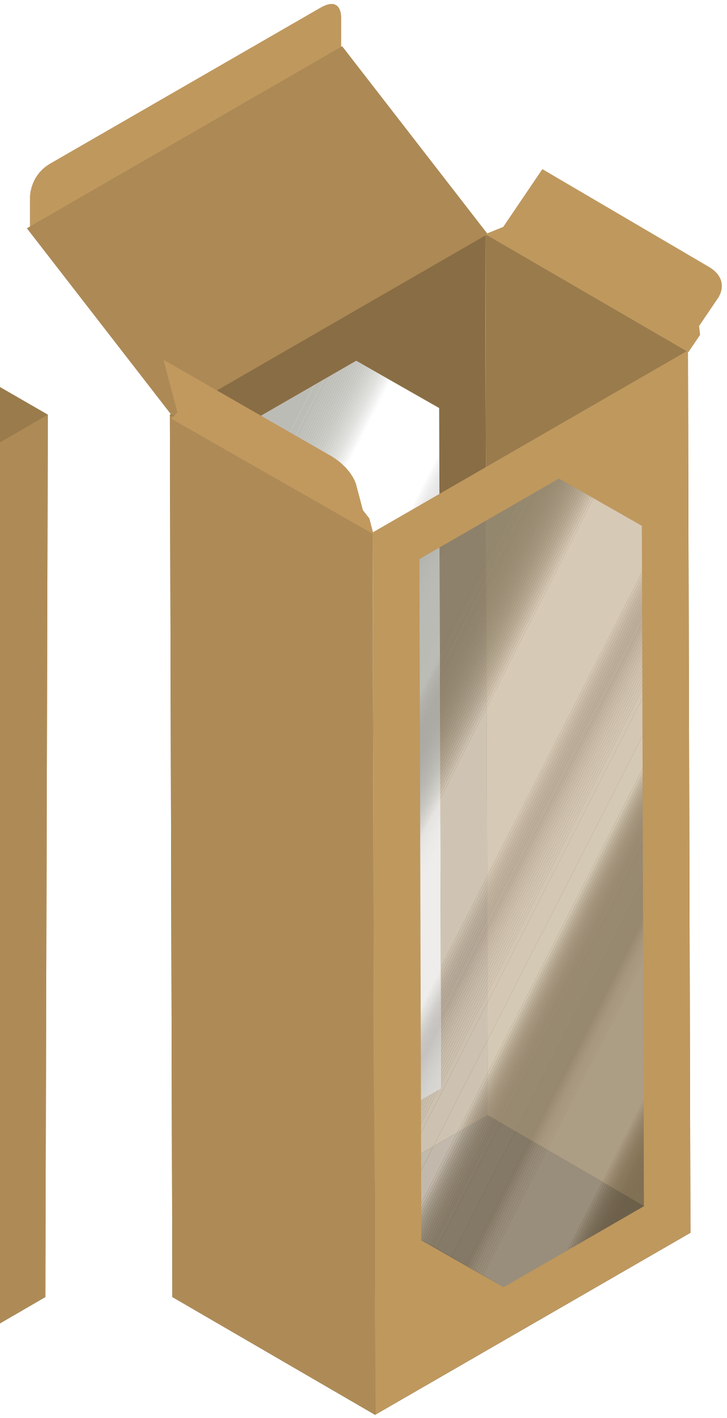

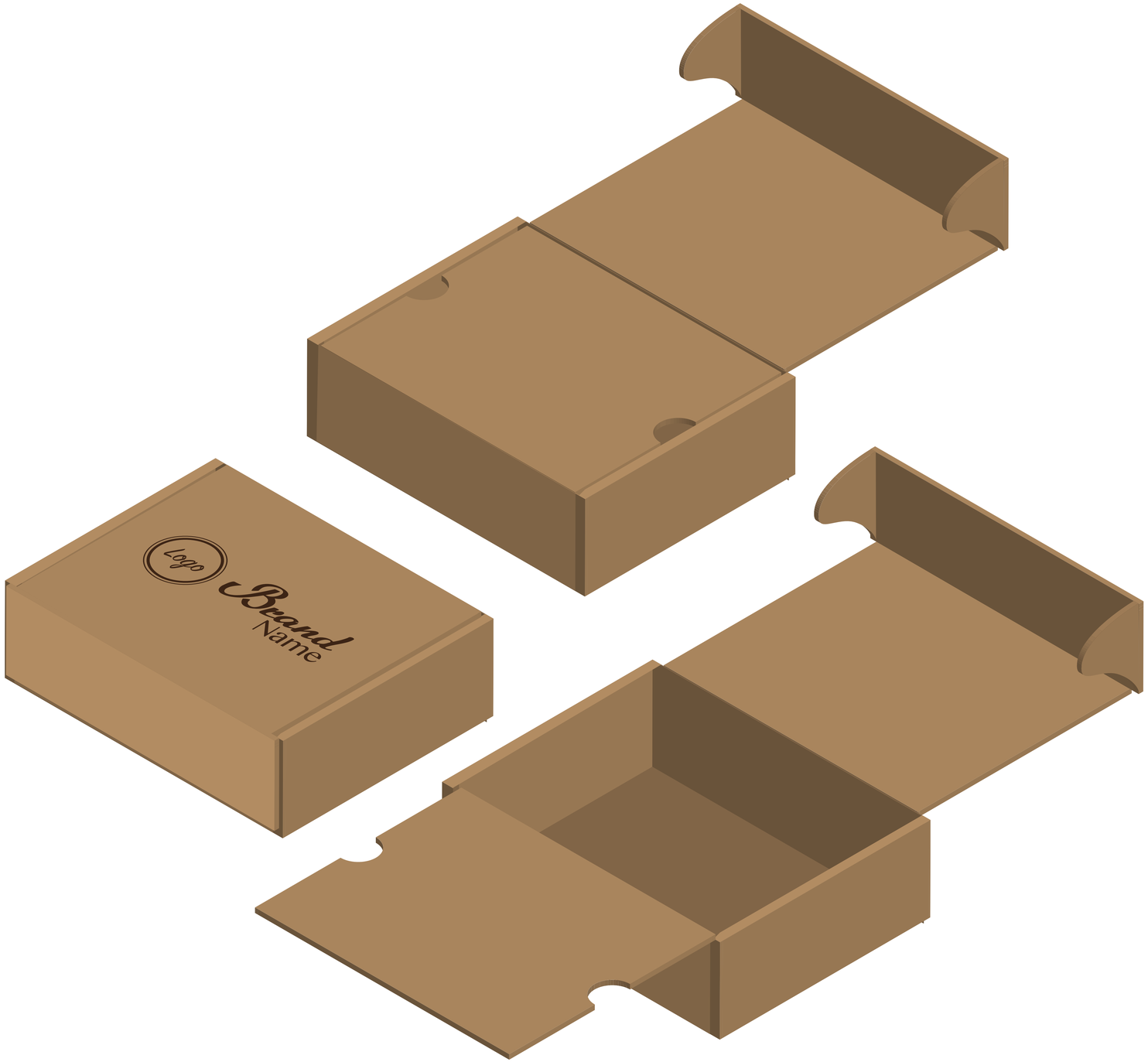
Logo
Brand
Name

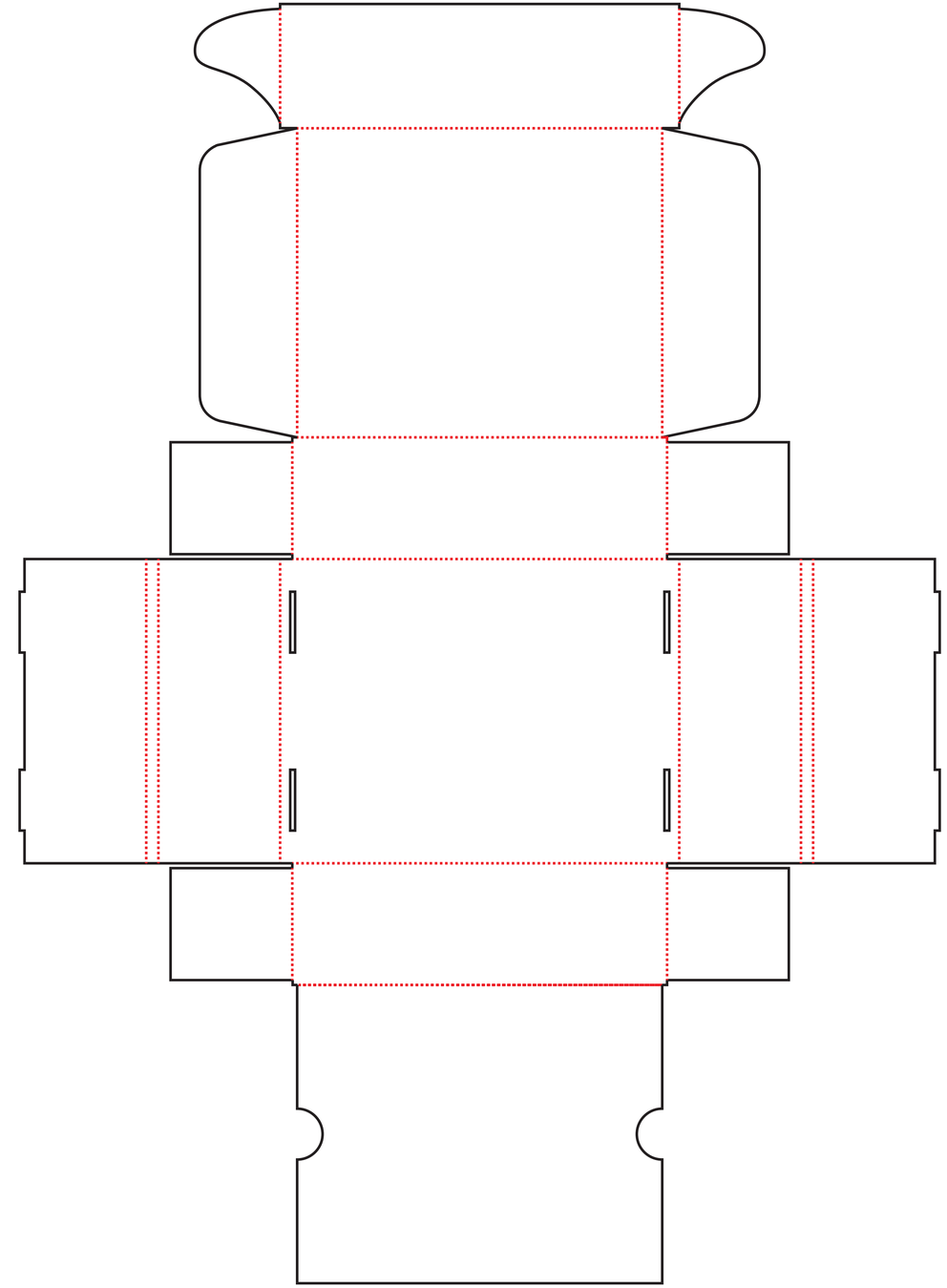

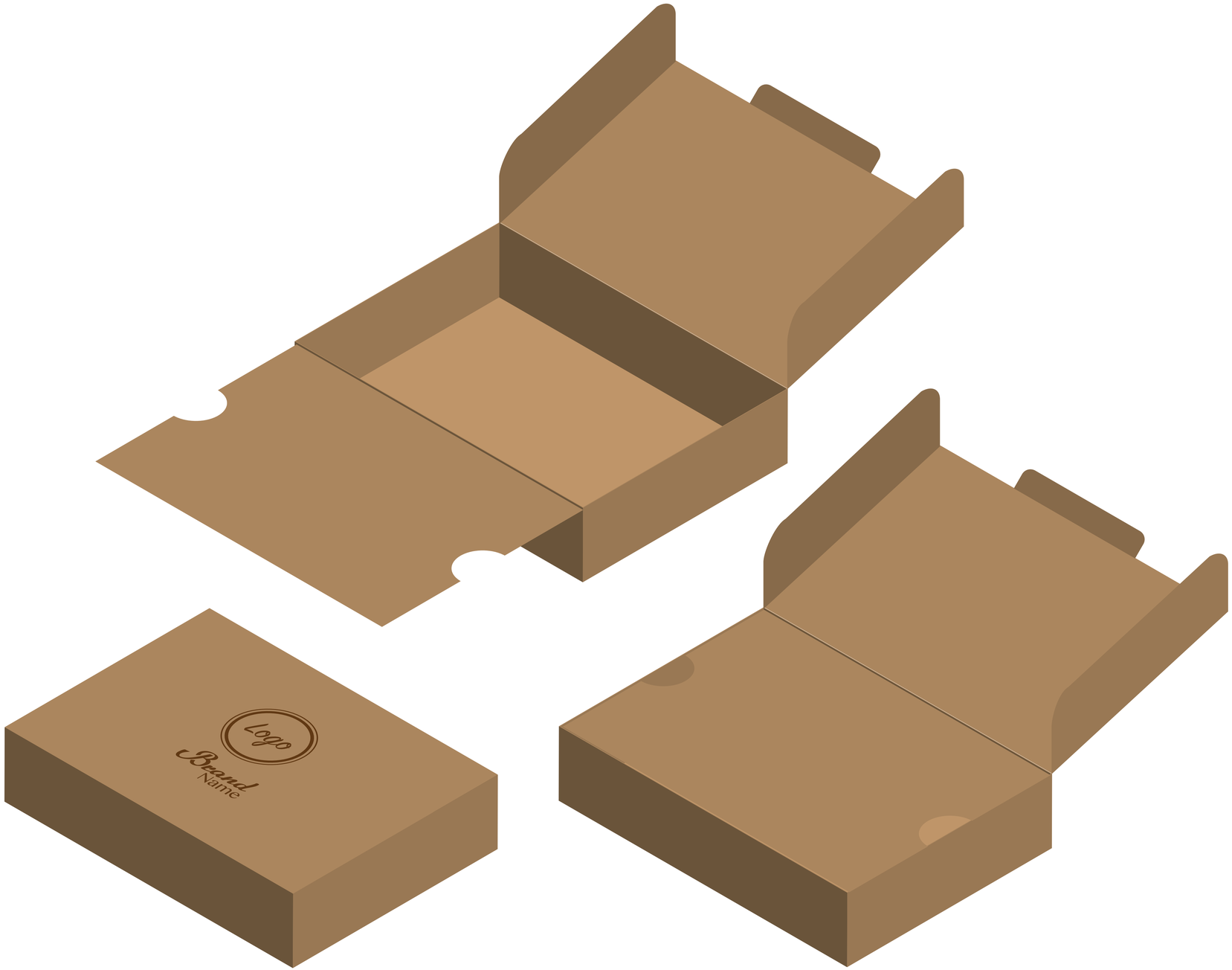
Logo
Brand
Name

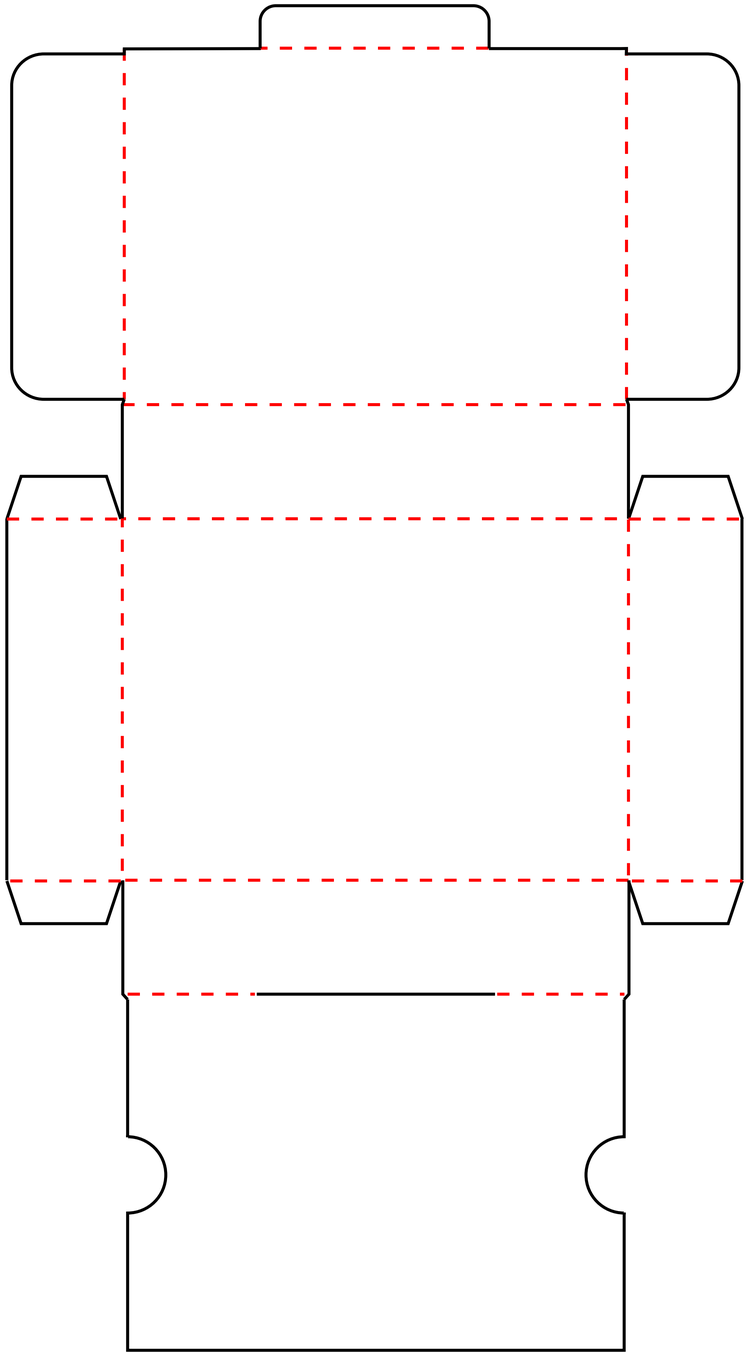

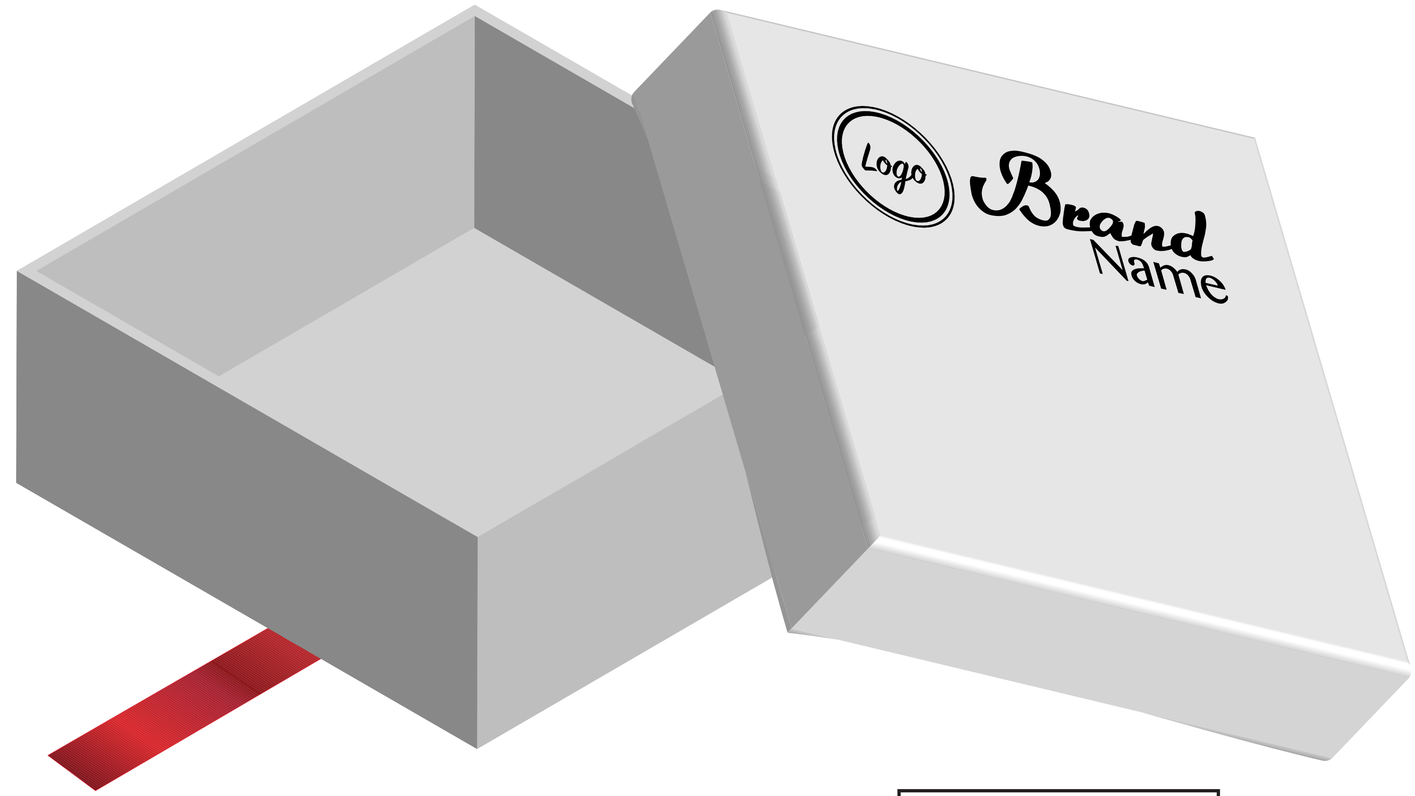

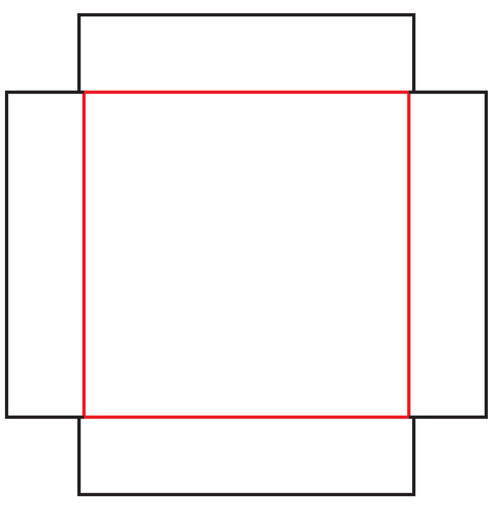

Hard Board Paper
Thick 0.16 cm Top Box

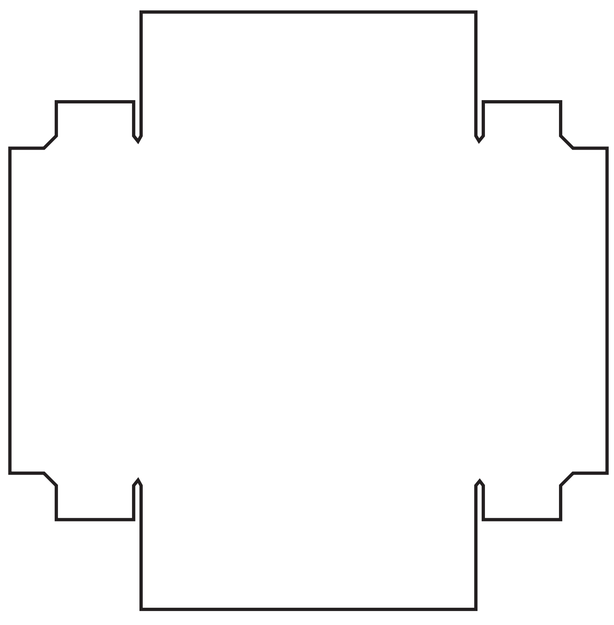

Wrapping Paper
Top Box

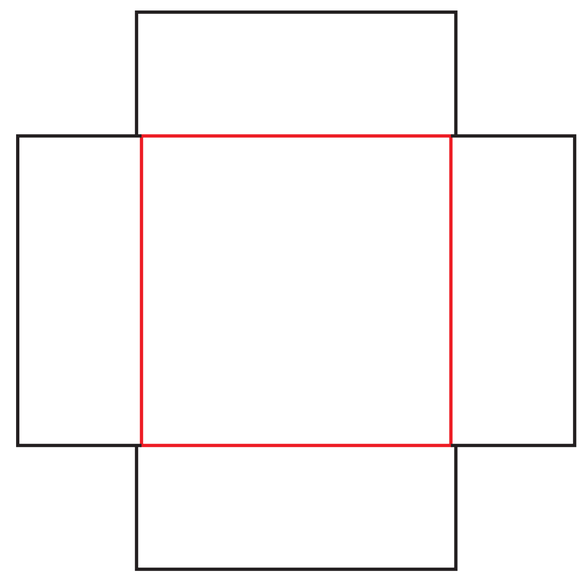

Hard Board Paper
Thick 0.16 cm Bottom Box

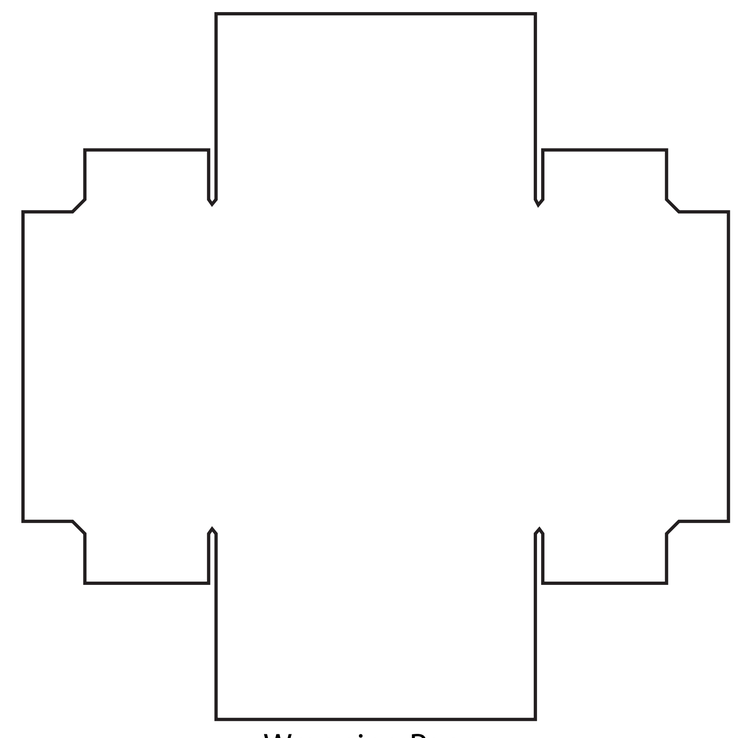

Wrapping Paper
Bottom Box

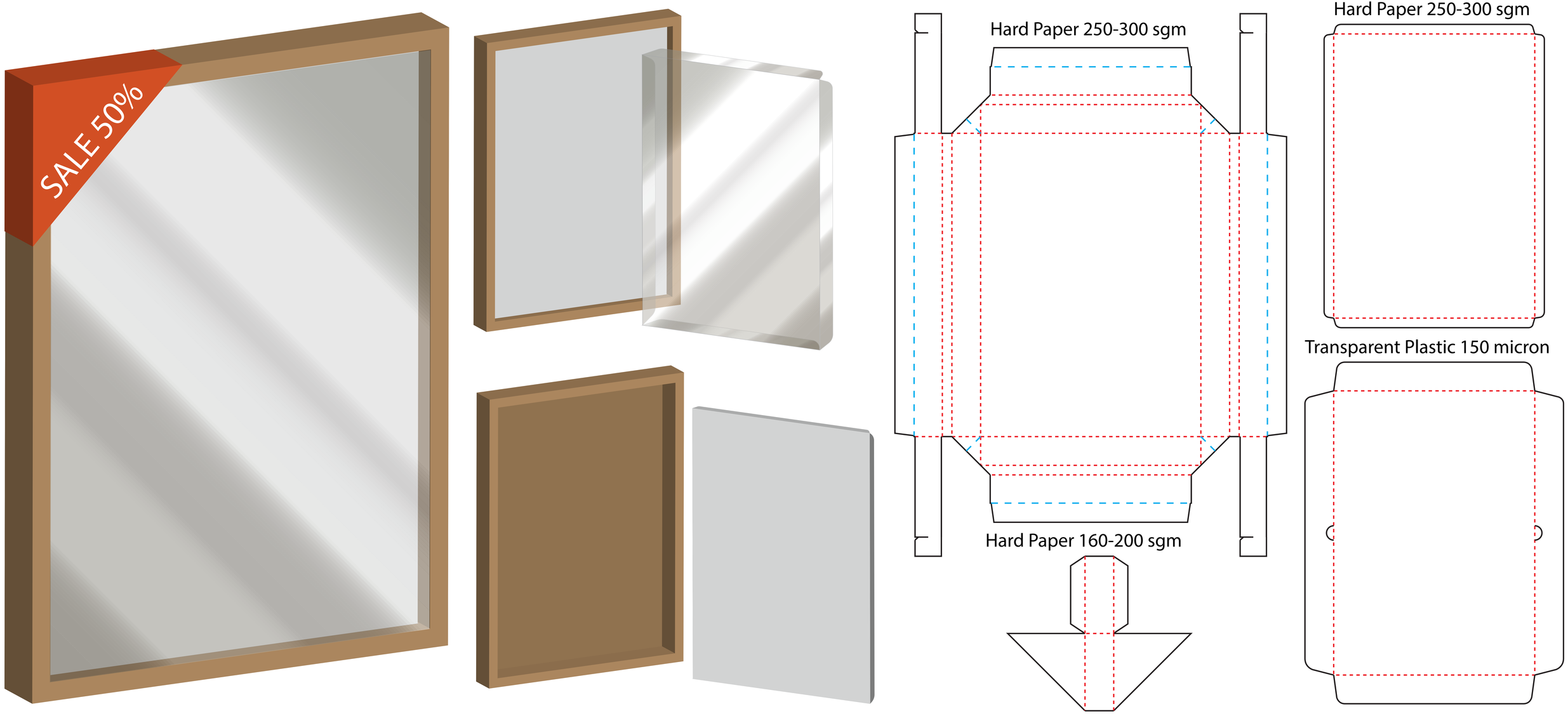
SALE 50%
Hard Paper 250-300 sgm
Hard Paper 250-300 sgm
Transparent Plastic 150 micron
Hard Paper 160-200 sgm

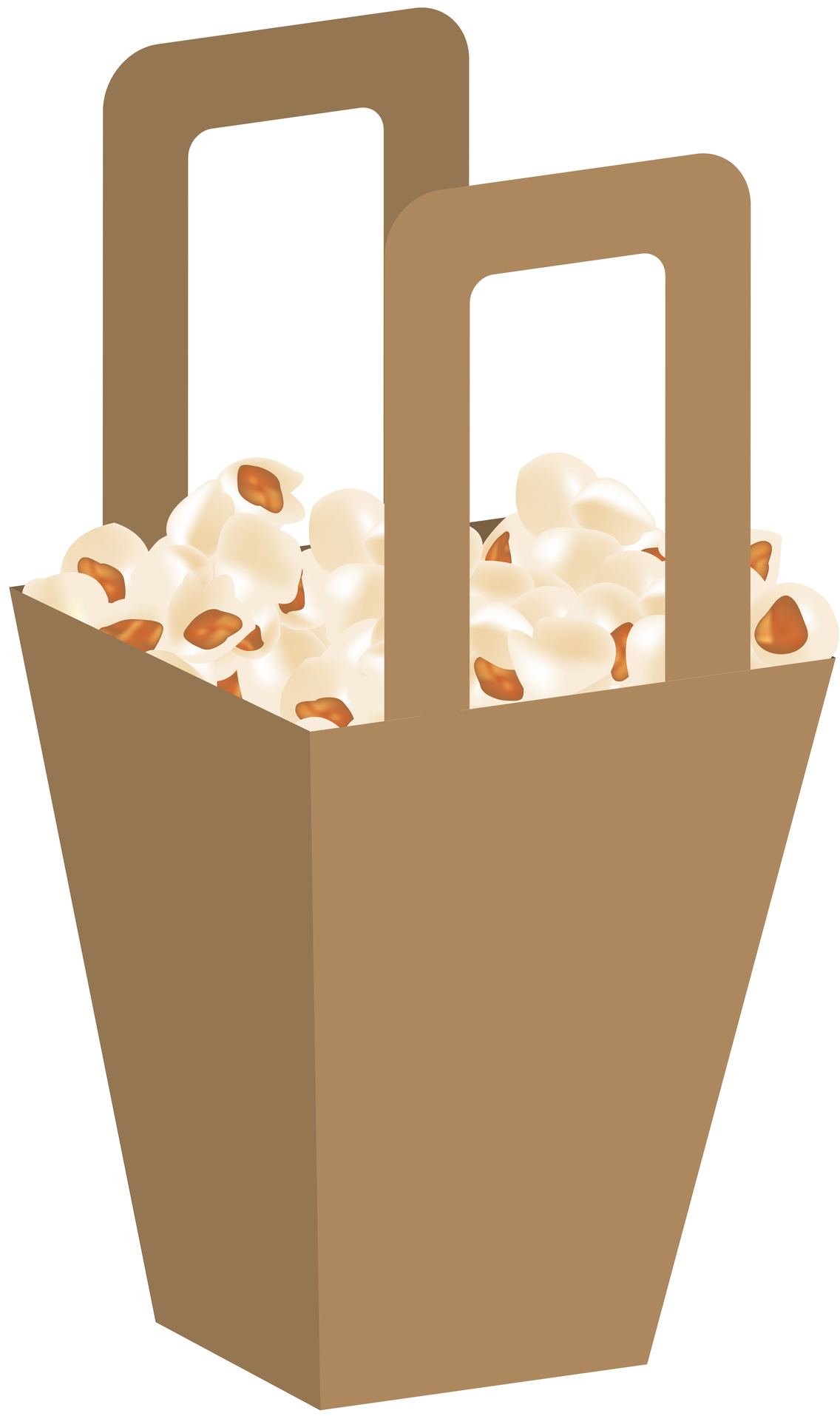

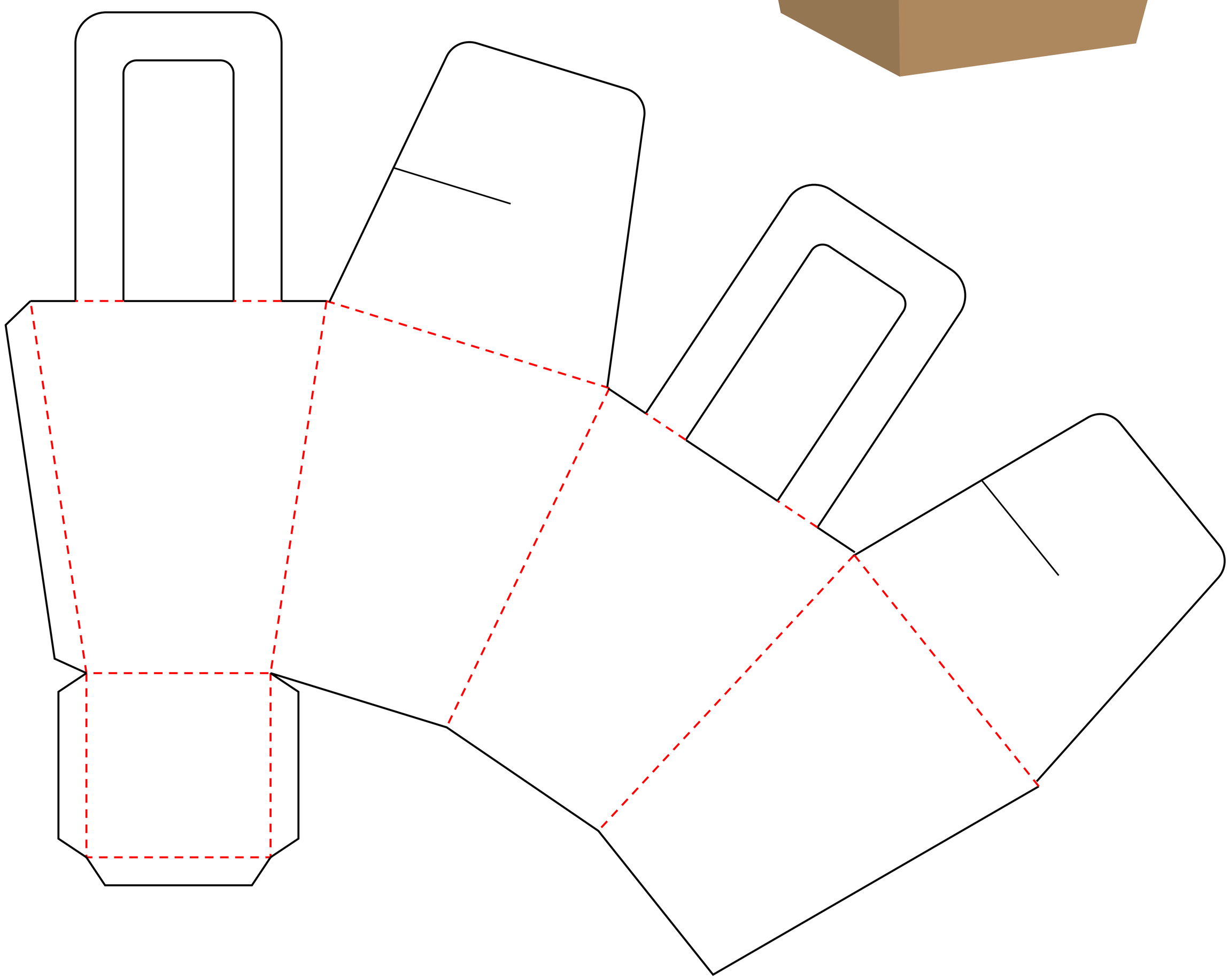

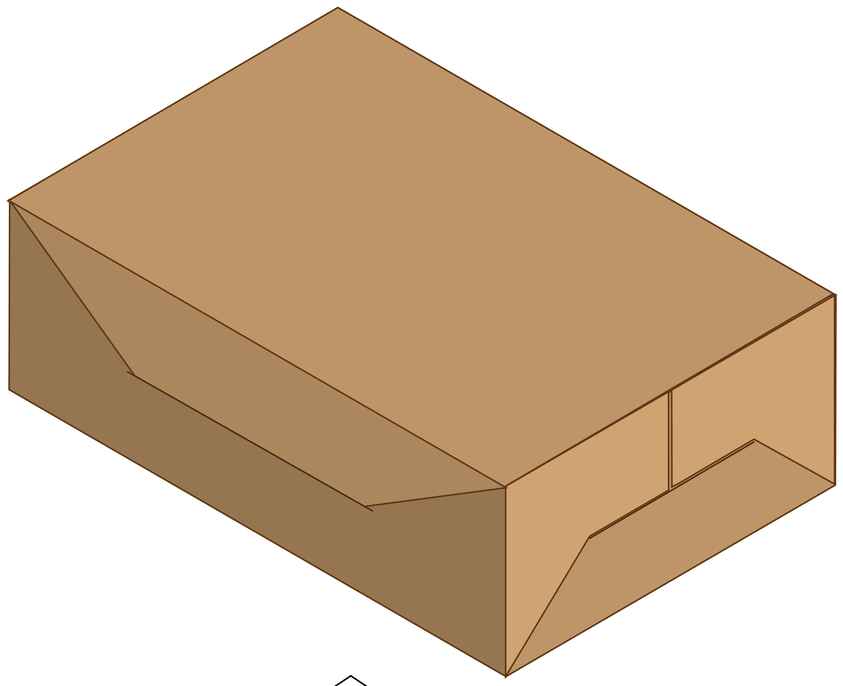

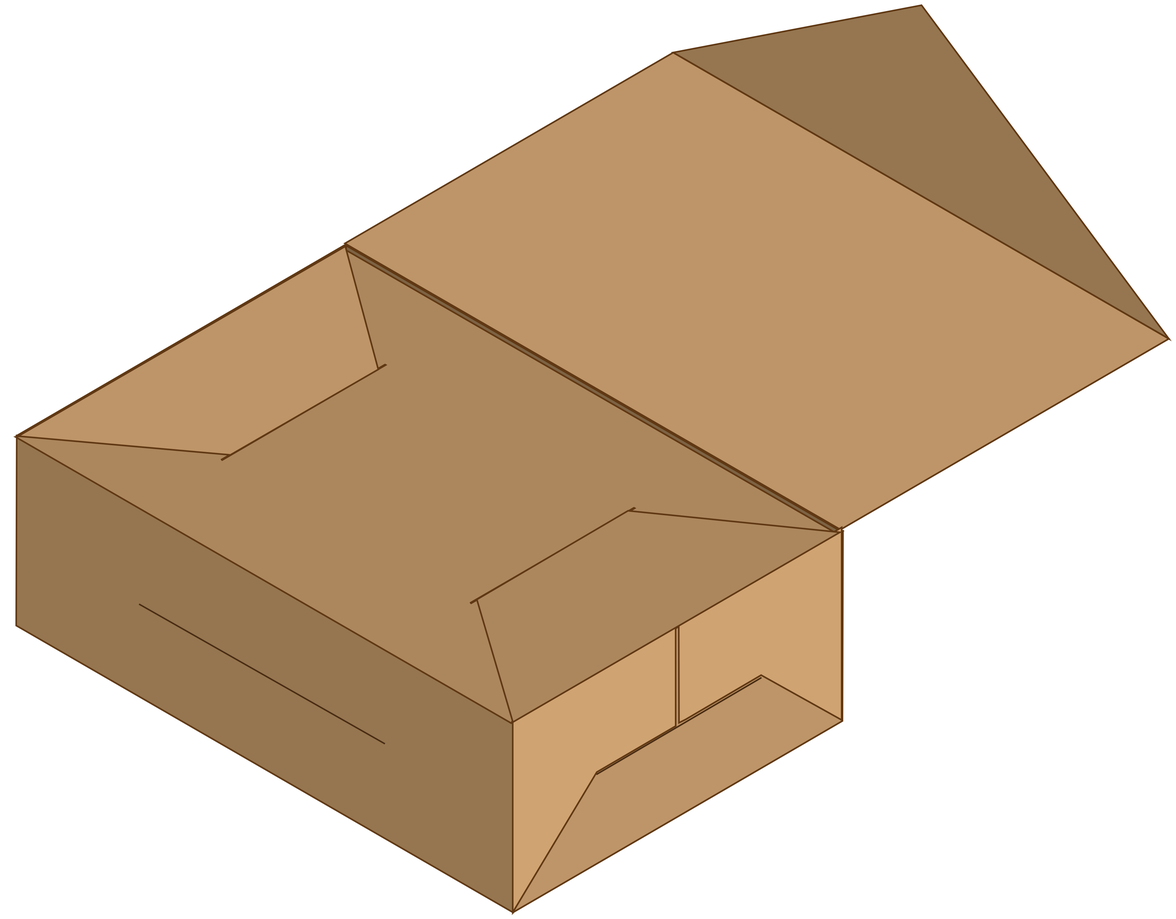

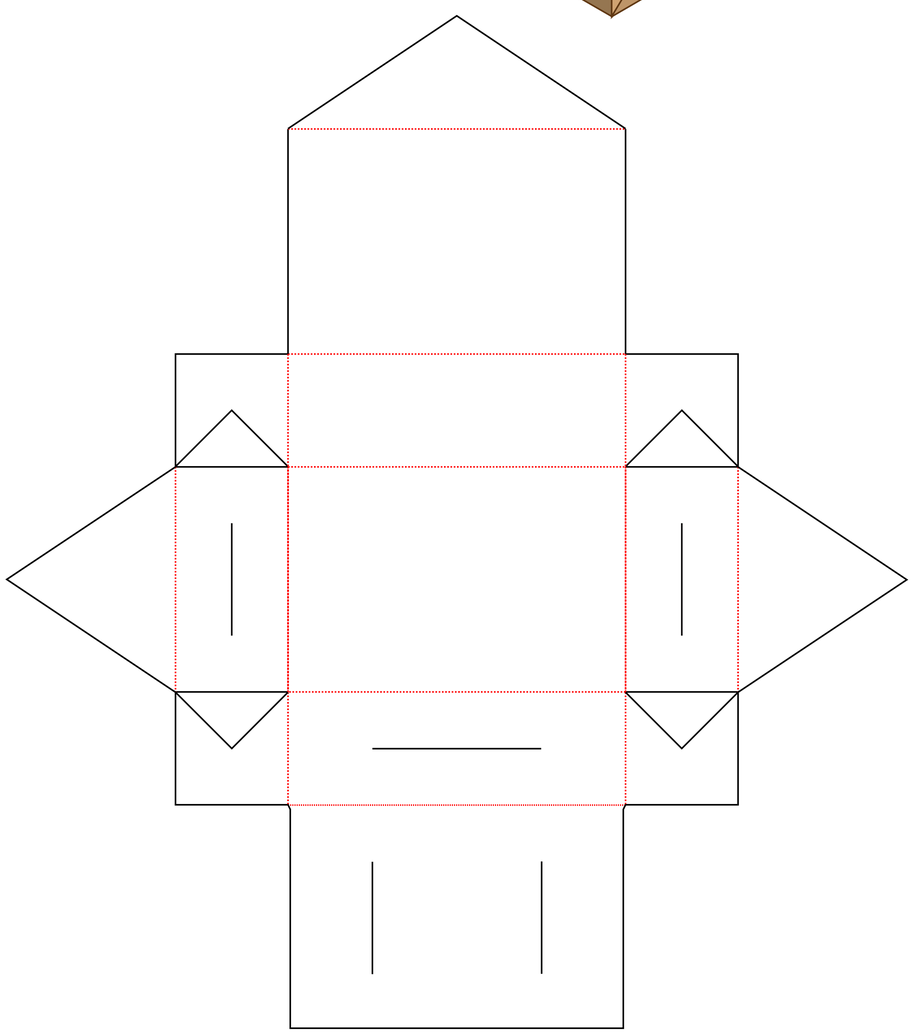

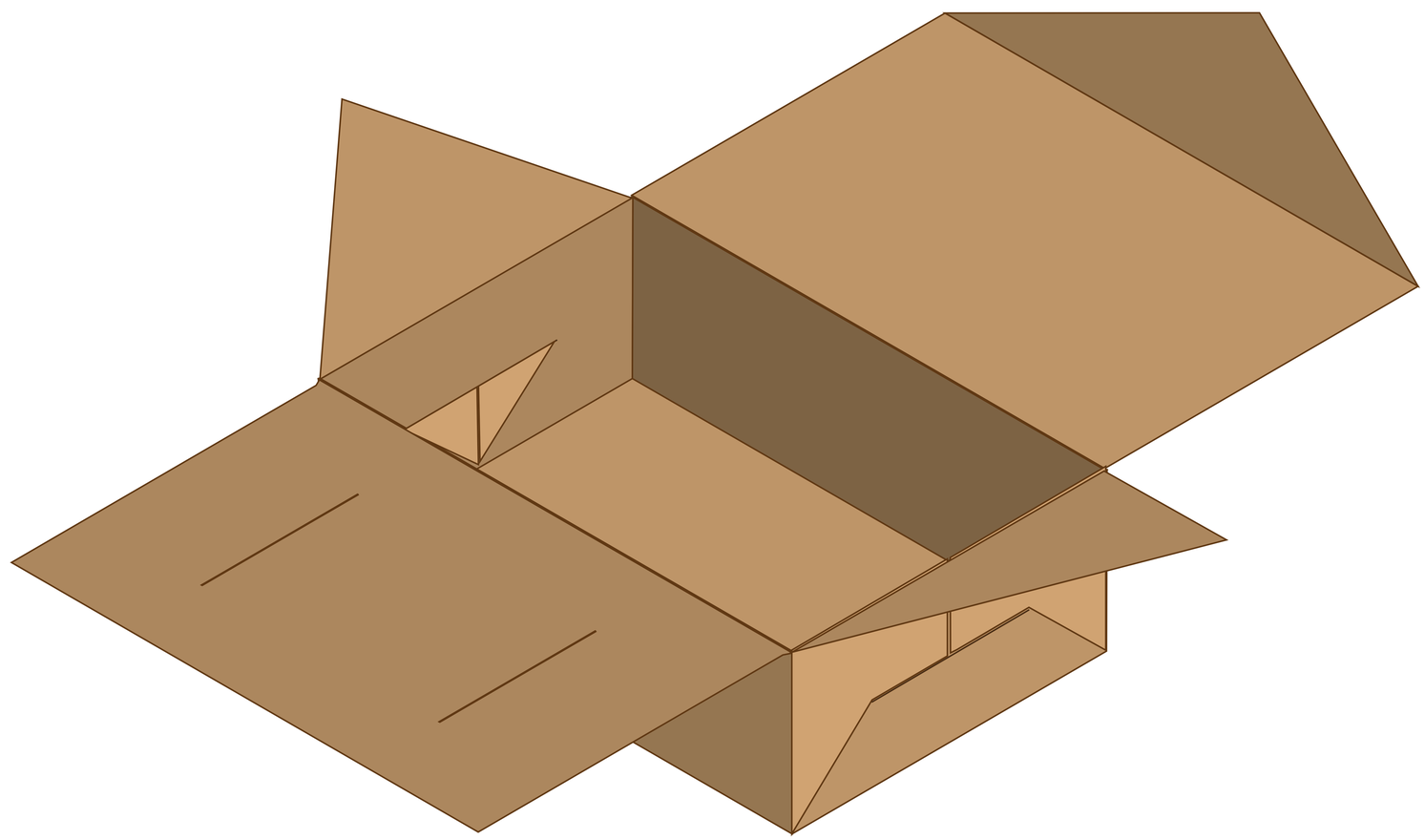

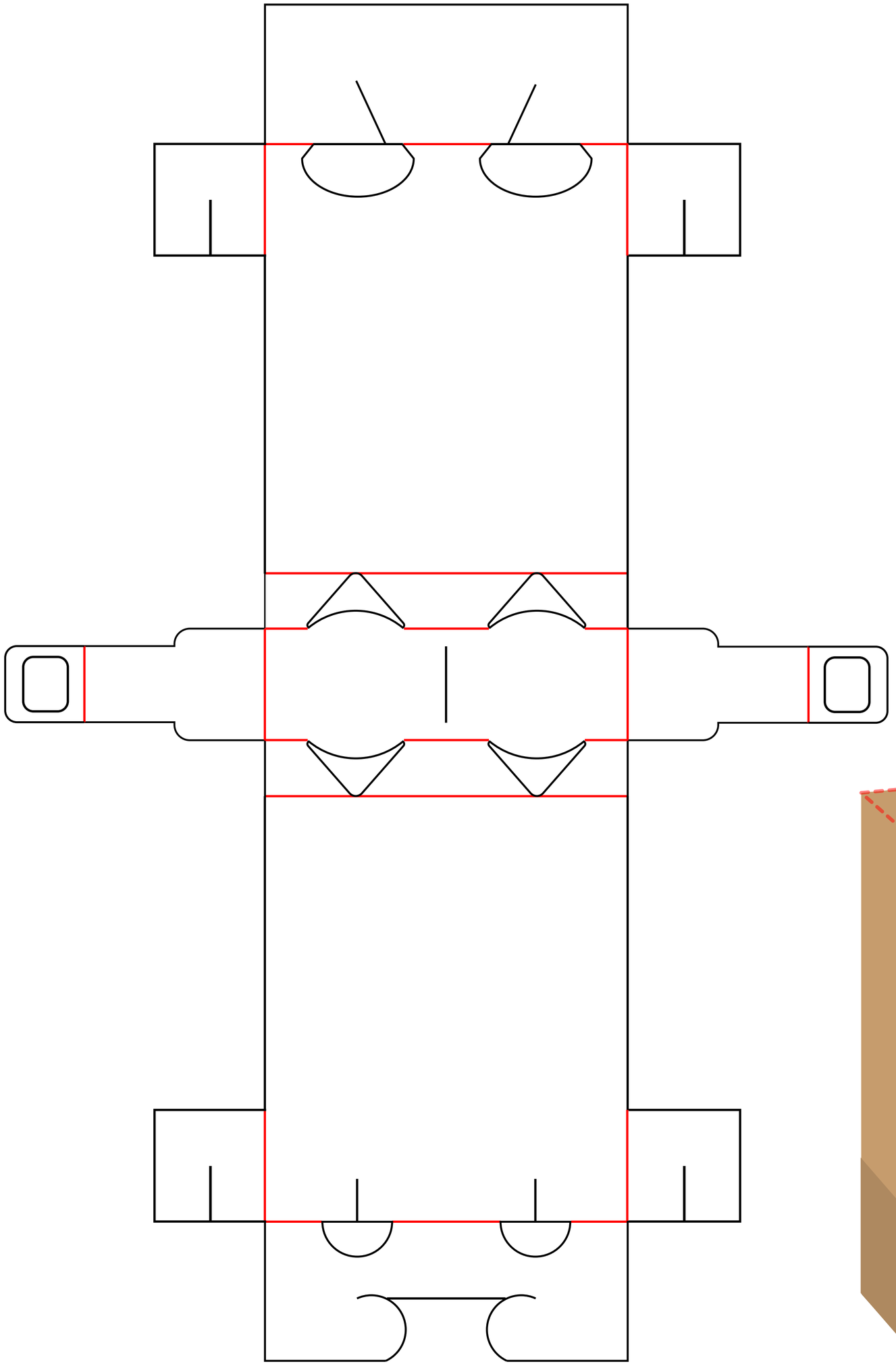

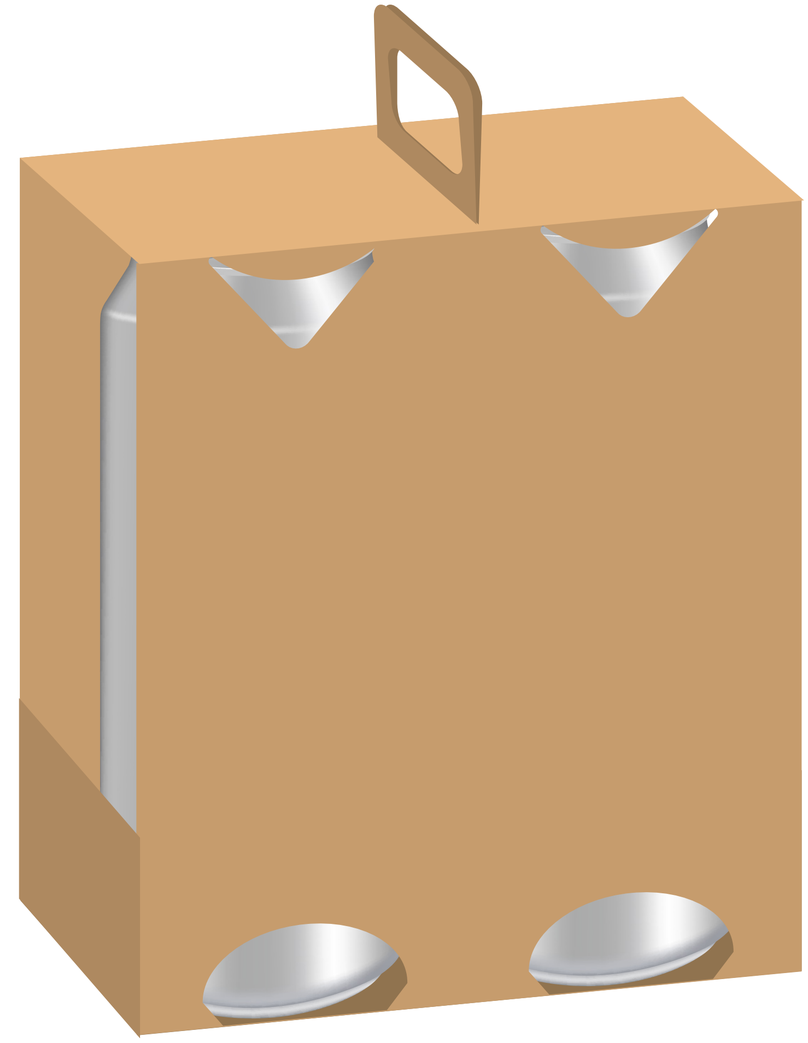

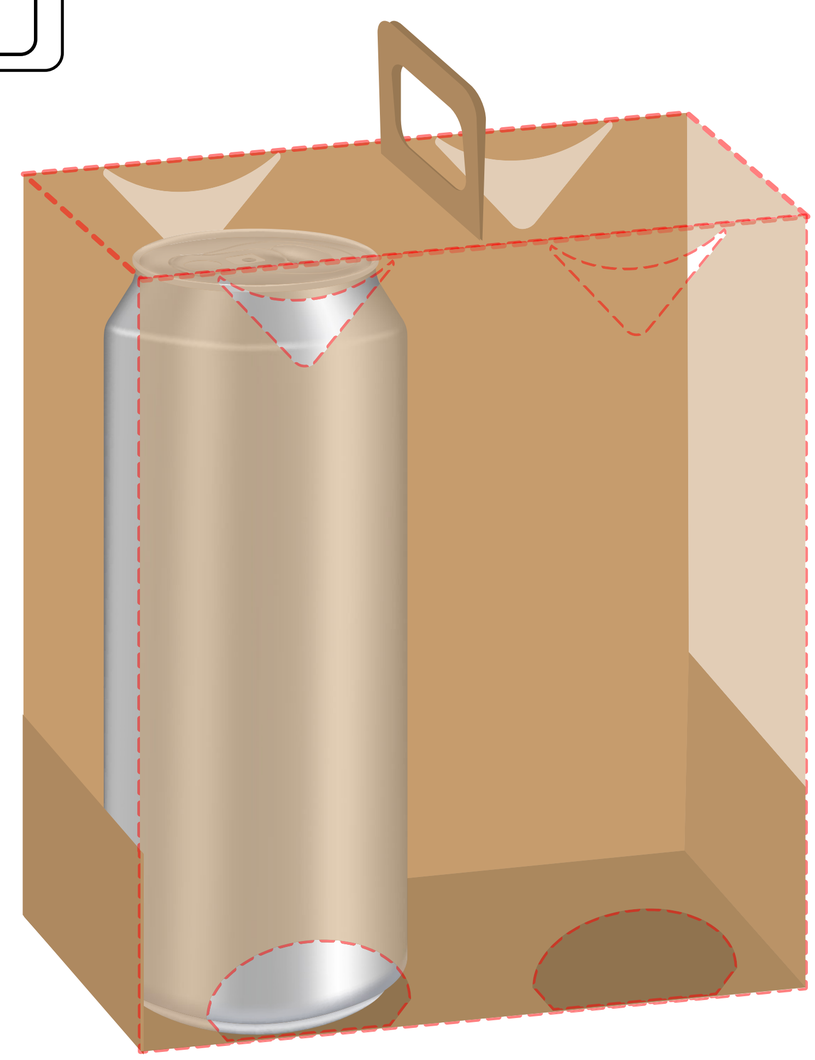

Hard Paper 350 gsm

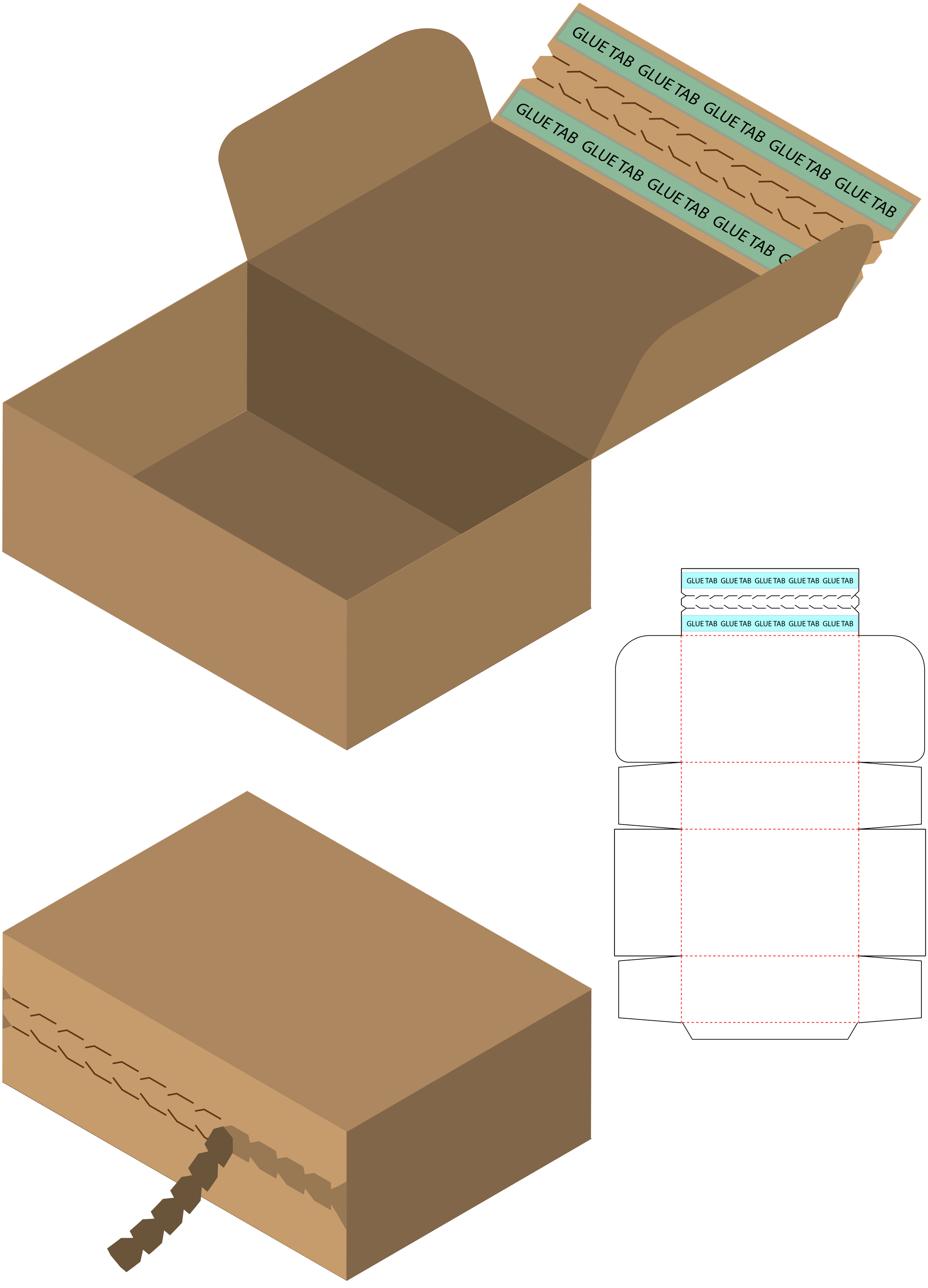
GLUE TAB GLUE TAB GLUE TAB GLUE TAB GLUE TAB
GLUE TAB GLUE TAB GLUE TAB GLUE TAB GLUE TAB
GLUE TAB GLUE TAB GLUE TAB GLUE TAB GLUE TAB
GLUE TAB GLUE TAB GLUE TAB GLUE TAB GLUE TAB

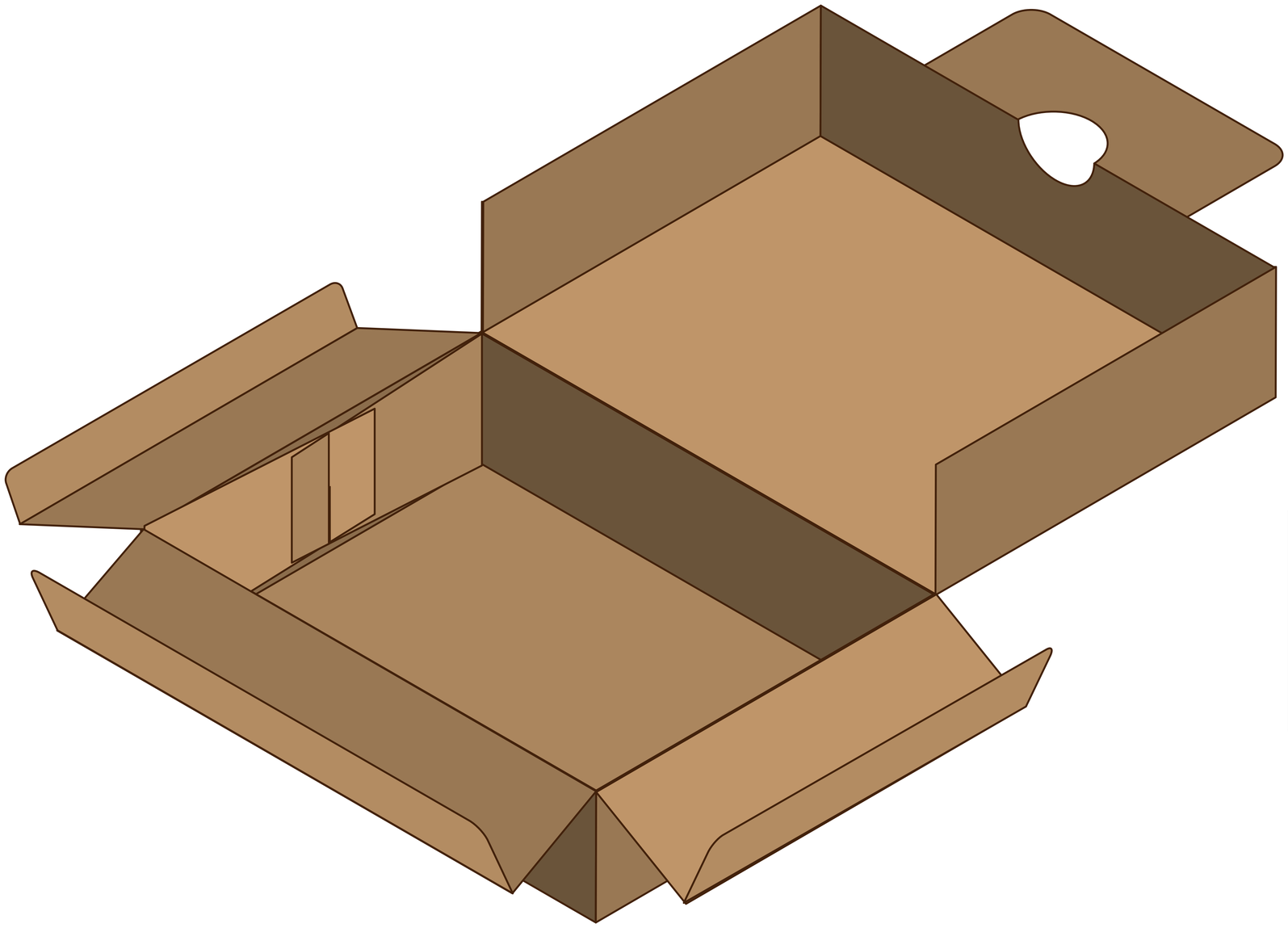

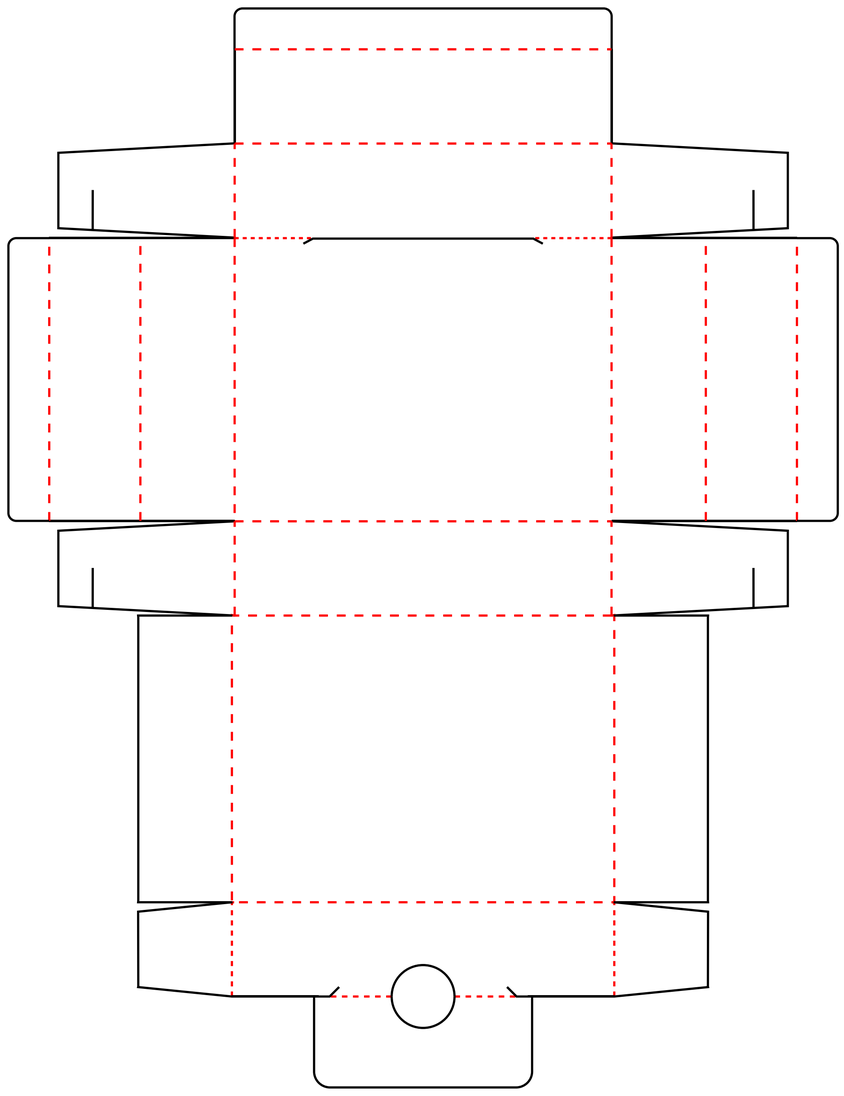

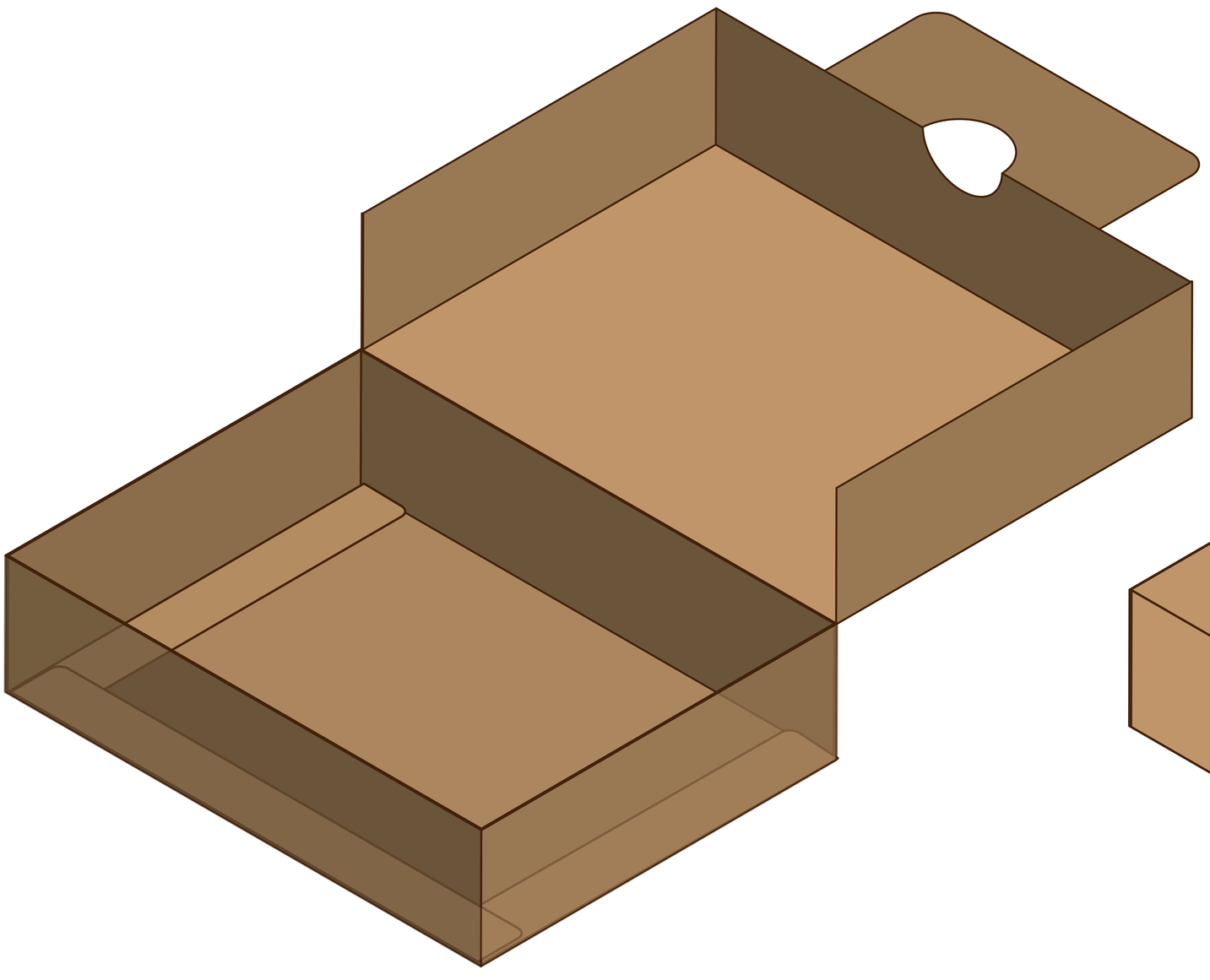

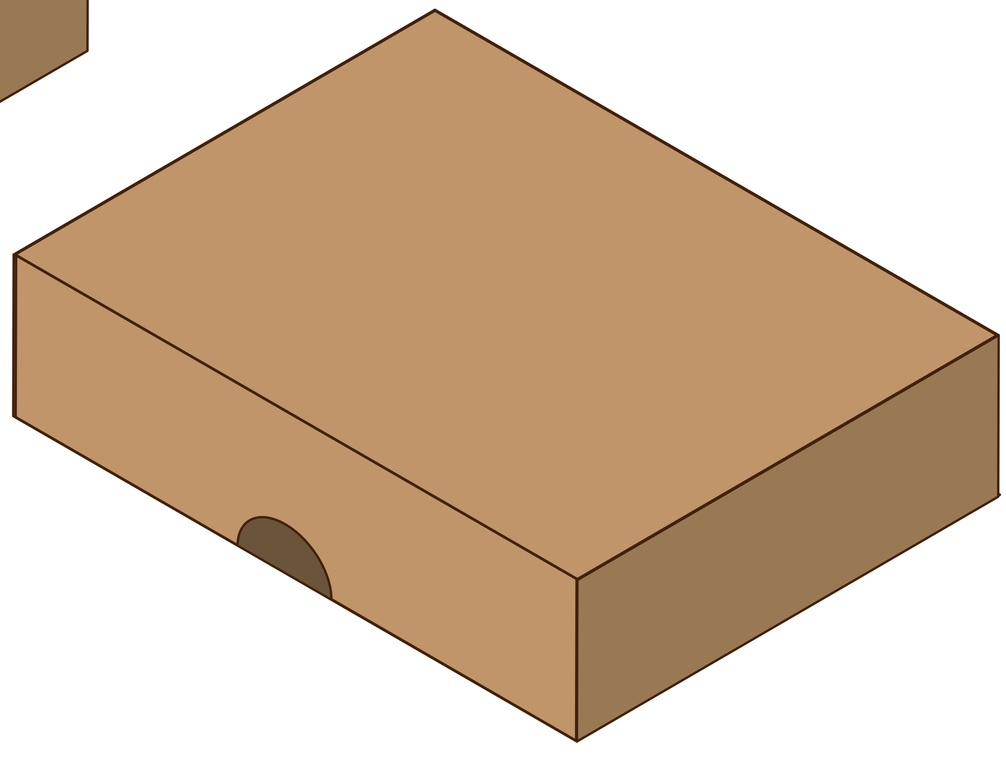

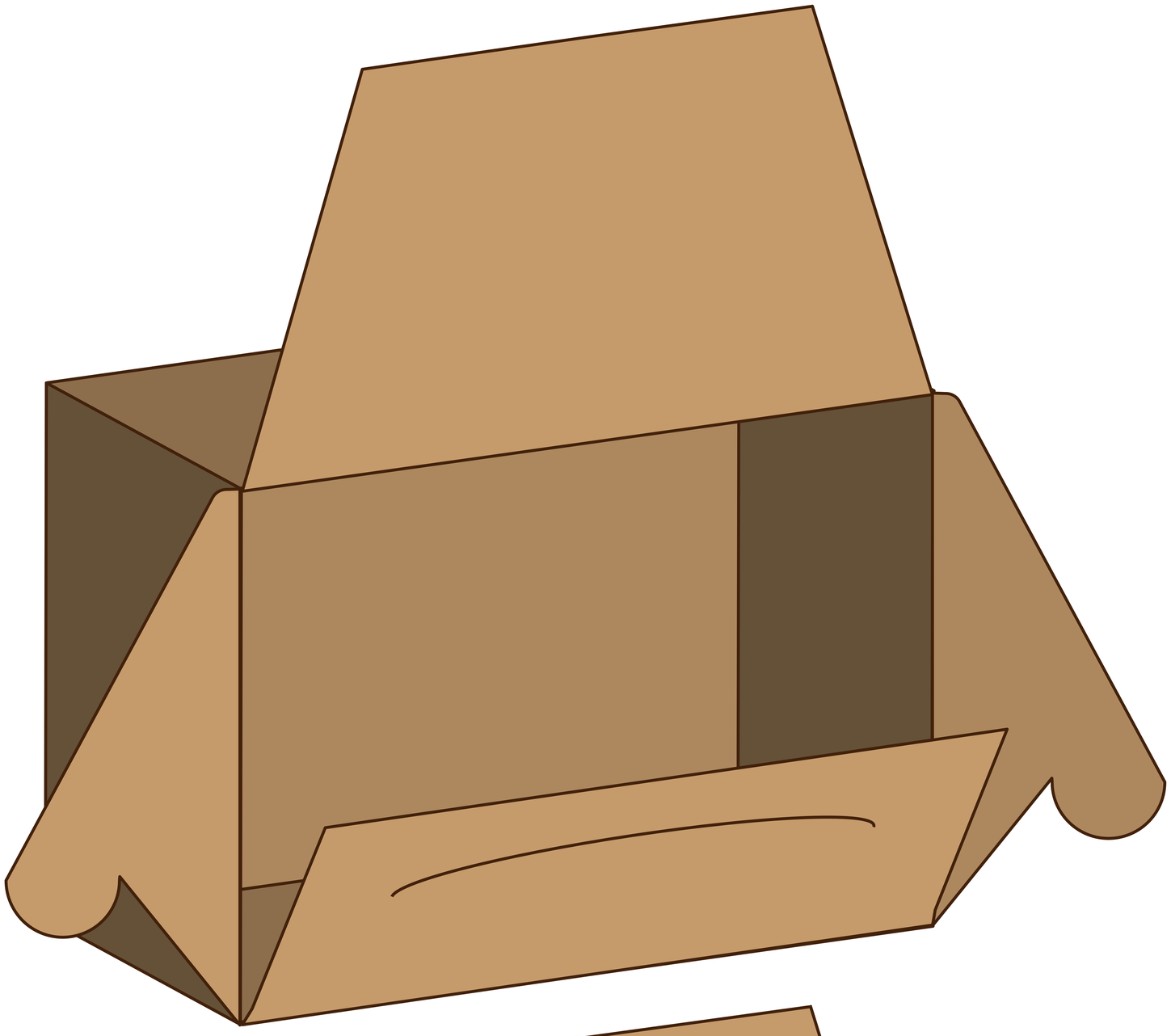

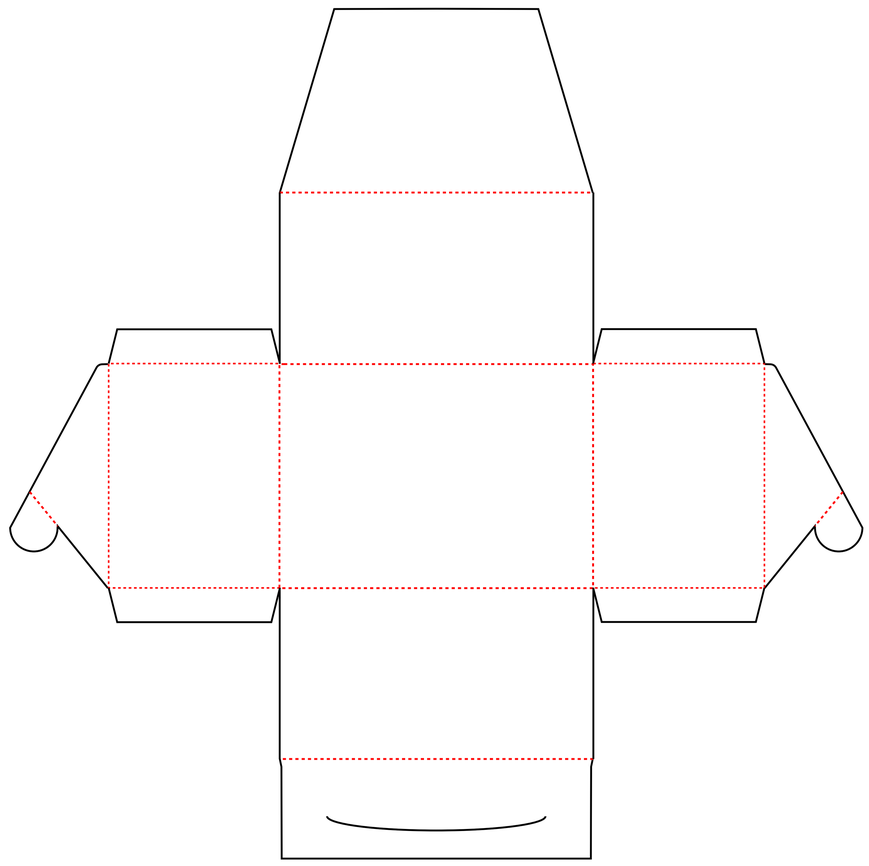

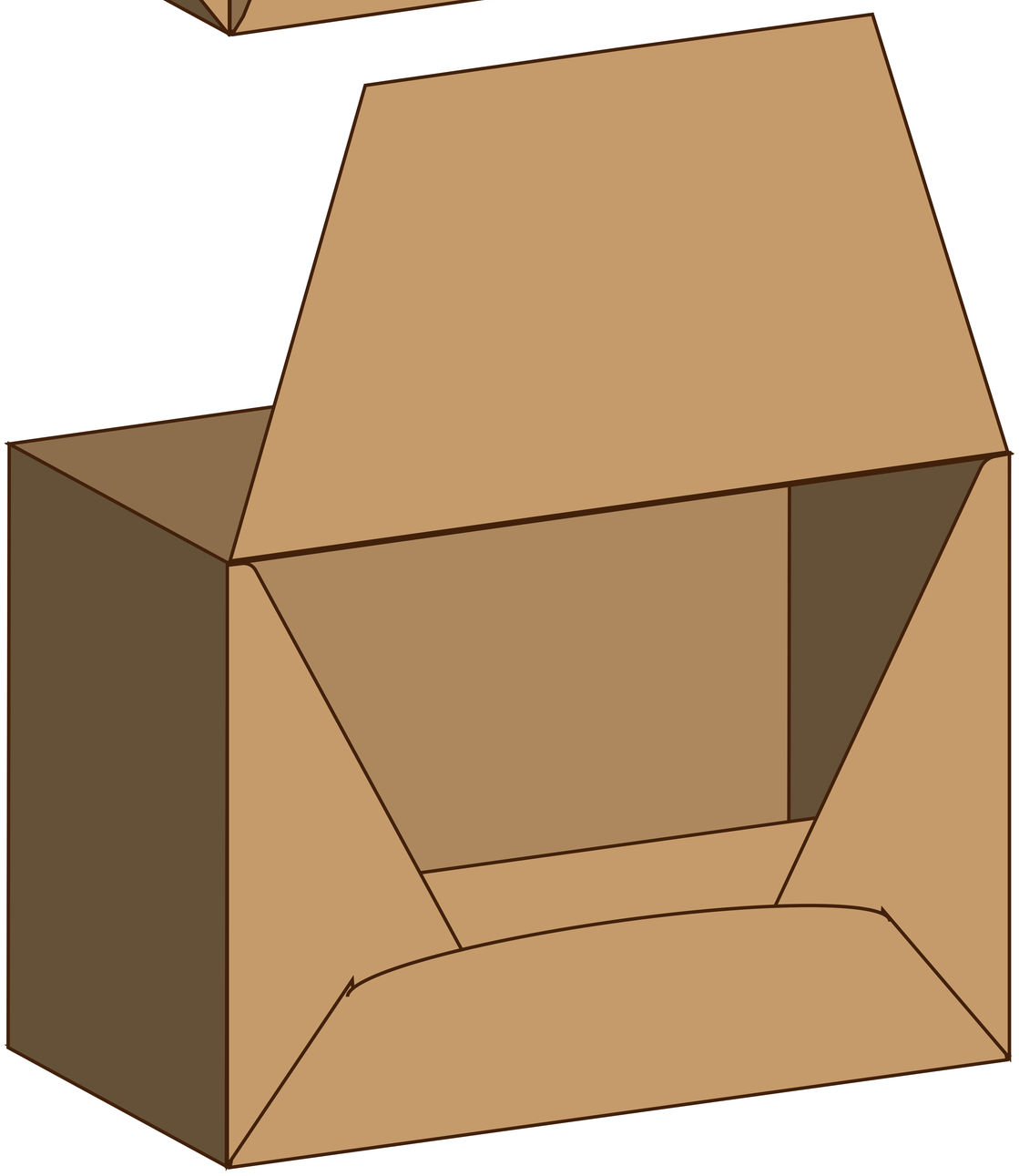

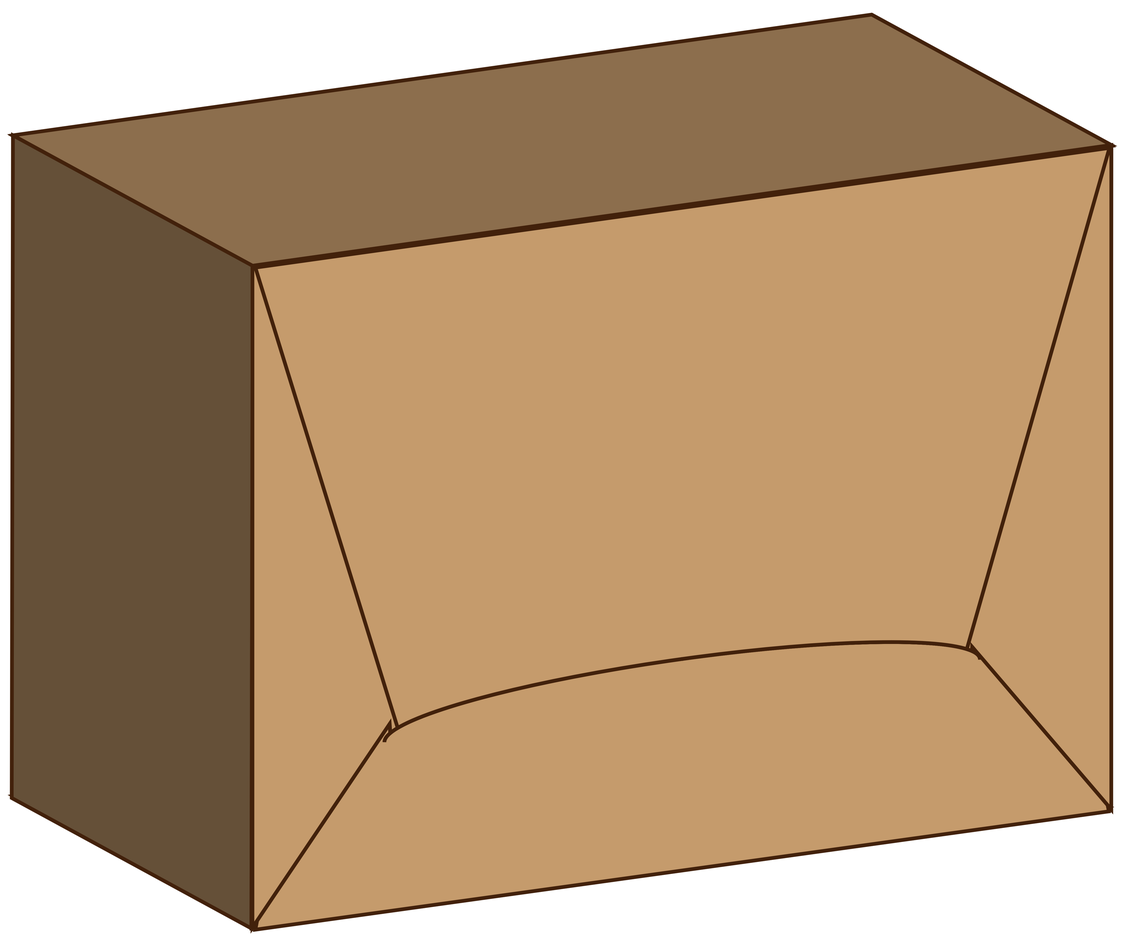

Logo

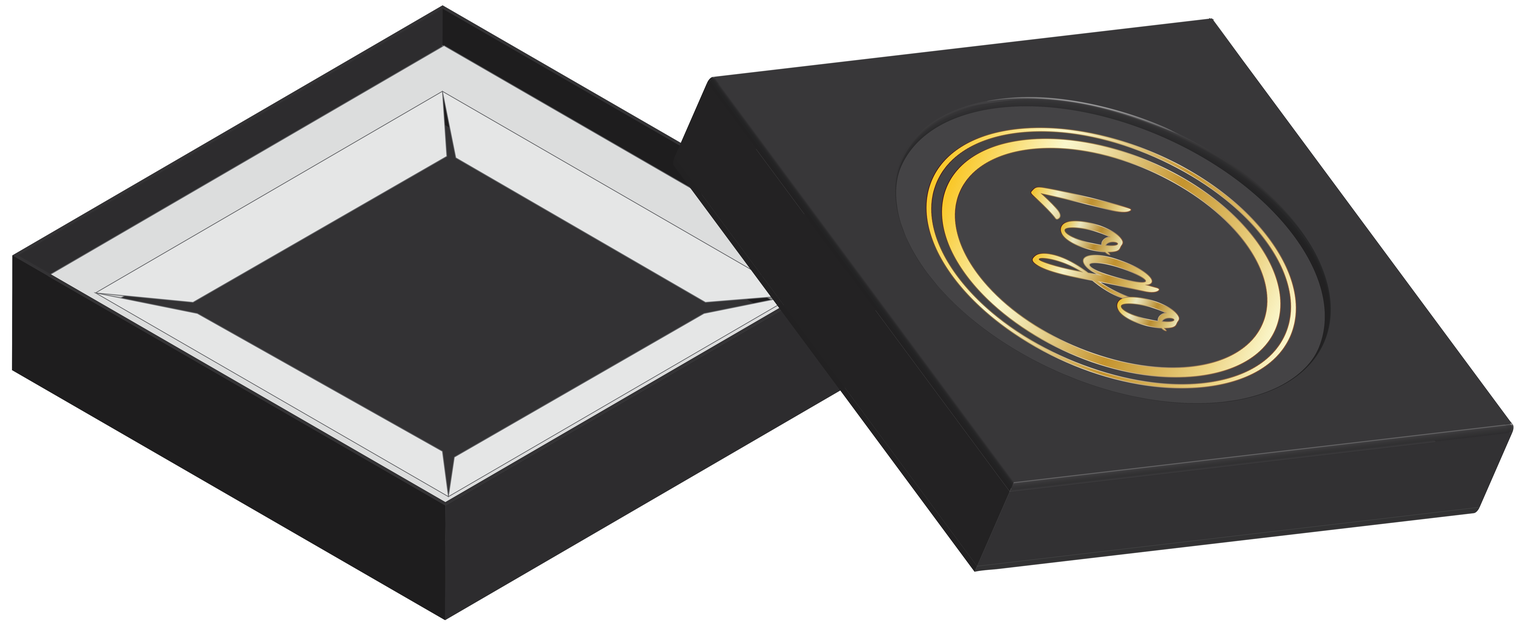
Logo

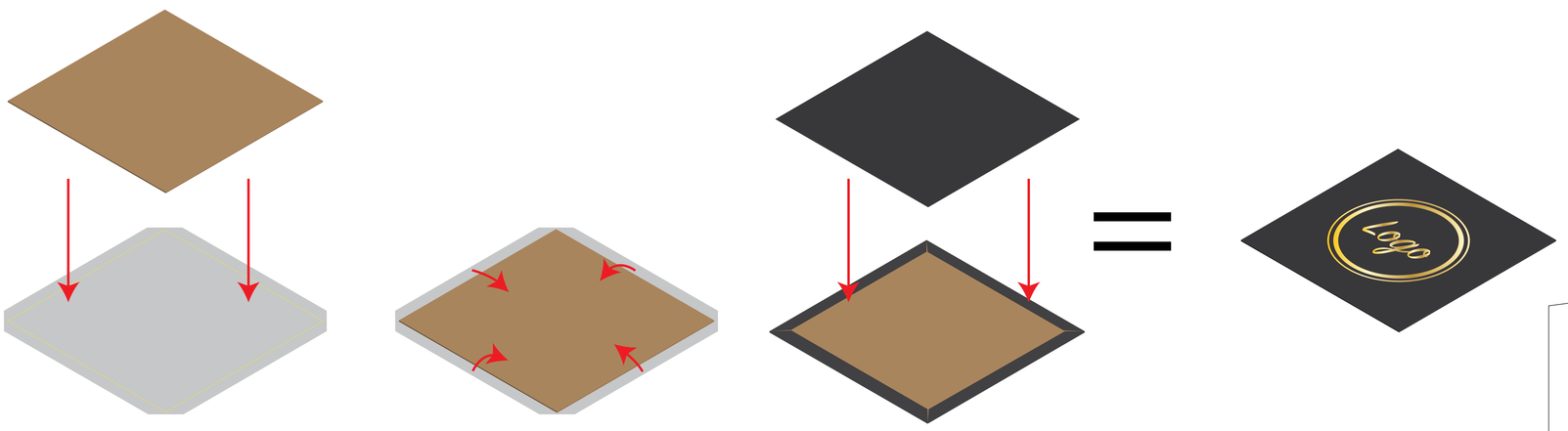
Logo

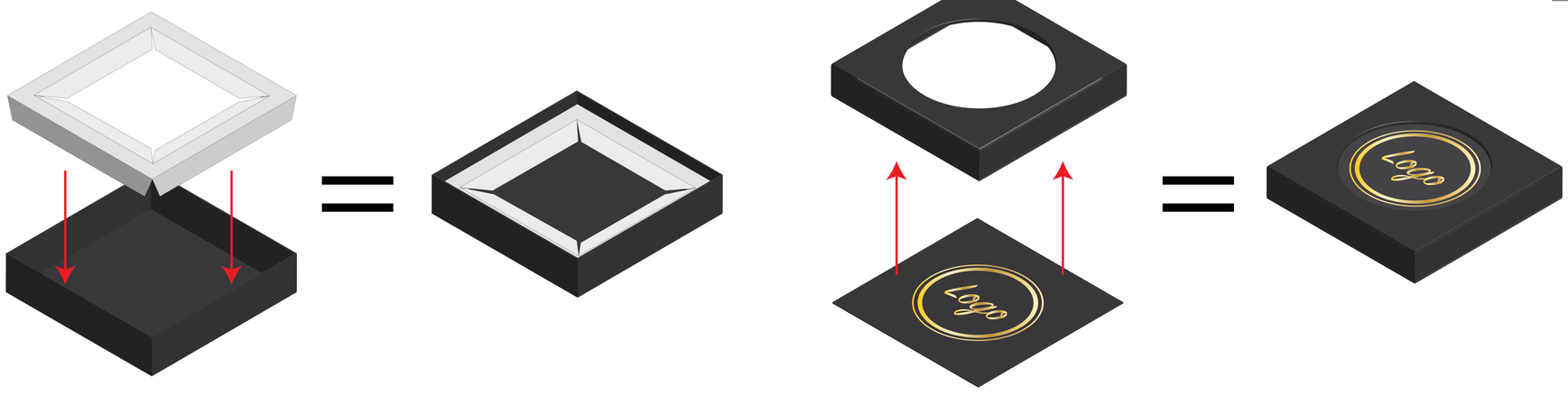
Logo

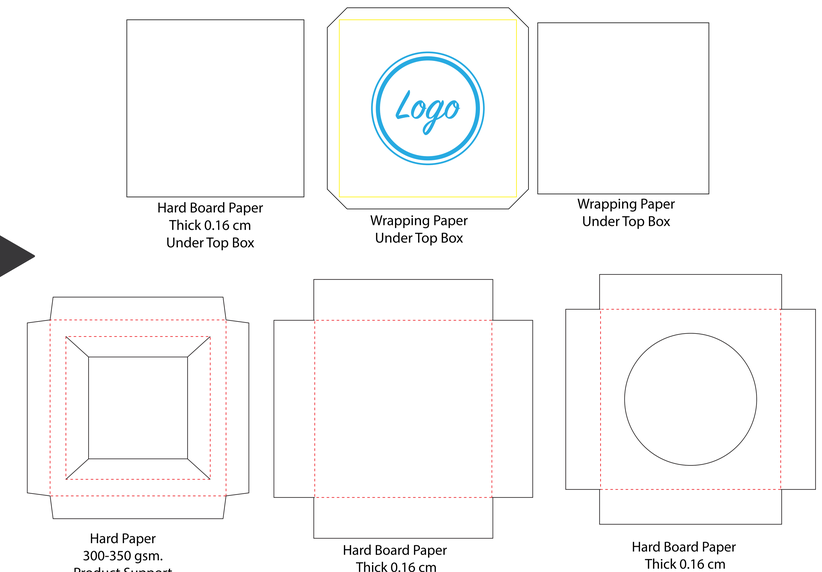
Logo
Hard Board Paper
Thick 0.16 cm
Under Top Box
Wrapping Paper
Under Top Box
Wrapping Paper
Under Top Box
Hard Paper
300-350 gsm.
Product Support
Hard Board Paper
Thick 0.16 cm
Bottom Box
Hard Board Paper
Thick 0.16 cm
Top Box
Wrapping Paper
Bottom Box
Wrapping Paper
Top Box

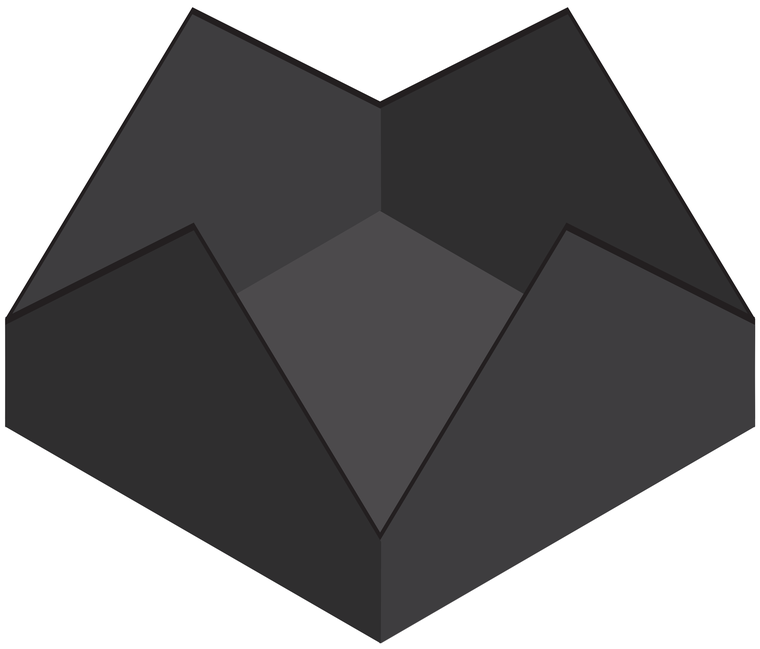

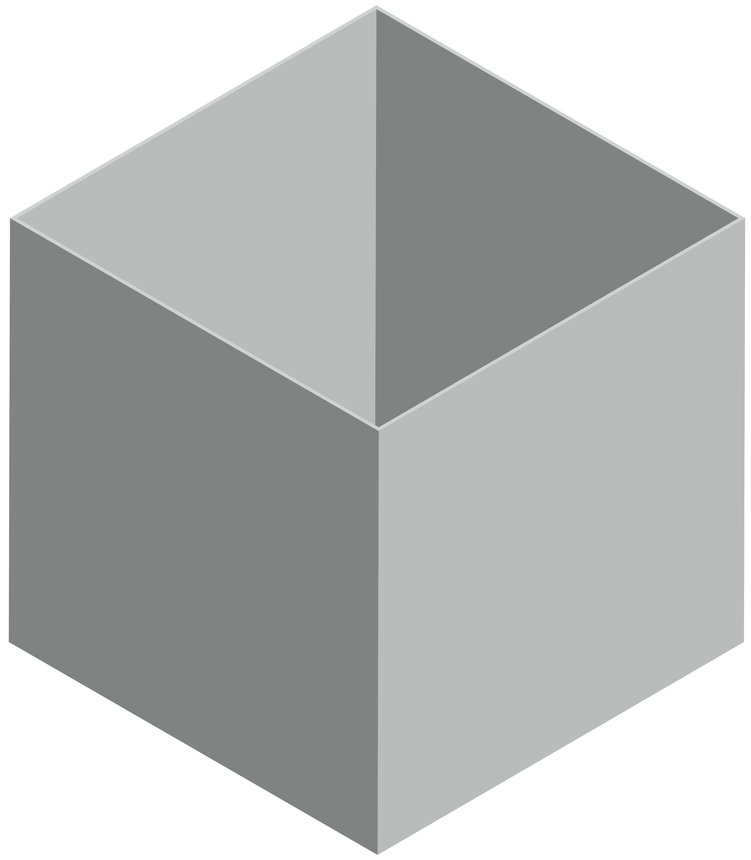

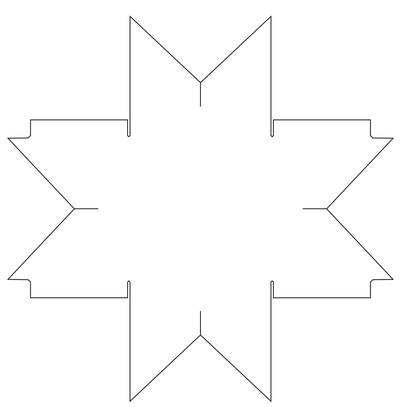

Wrapping Paper
Top Box

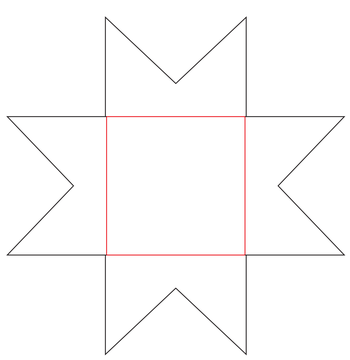

Hard Board Paper
Thick 0.1 cm
Top Box

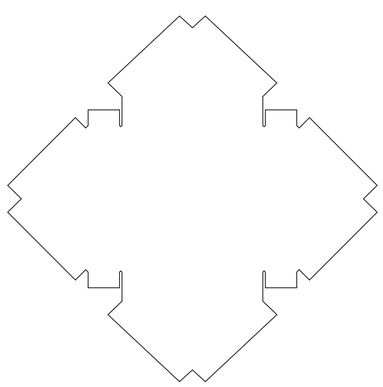

Wrapping Paper
Top Box

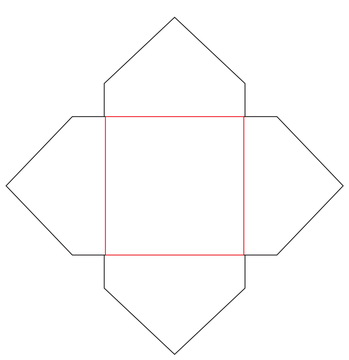

Hard Board Paper
Thick 0.1 cm
Top Box

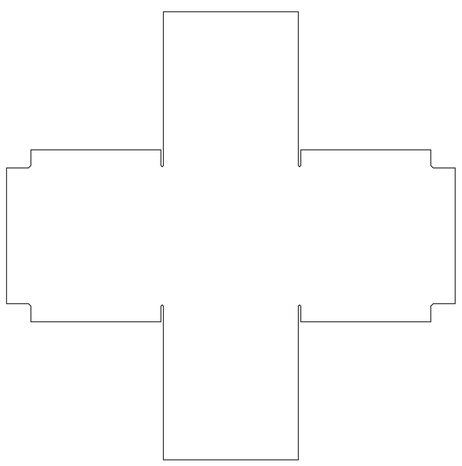

Wrapping Paper
Bottom Box

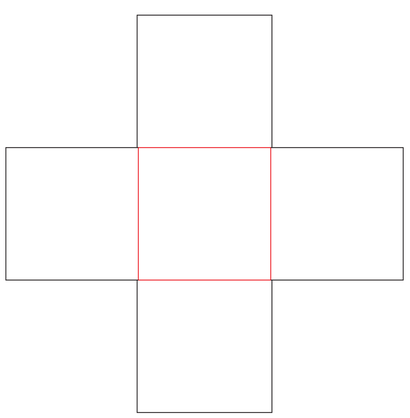

Hard Board Paper
Thick 0.1 cm
Bottom Box

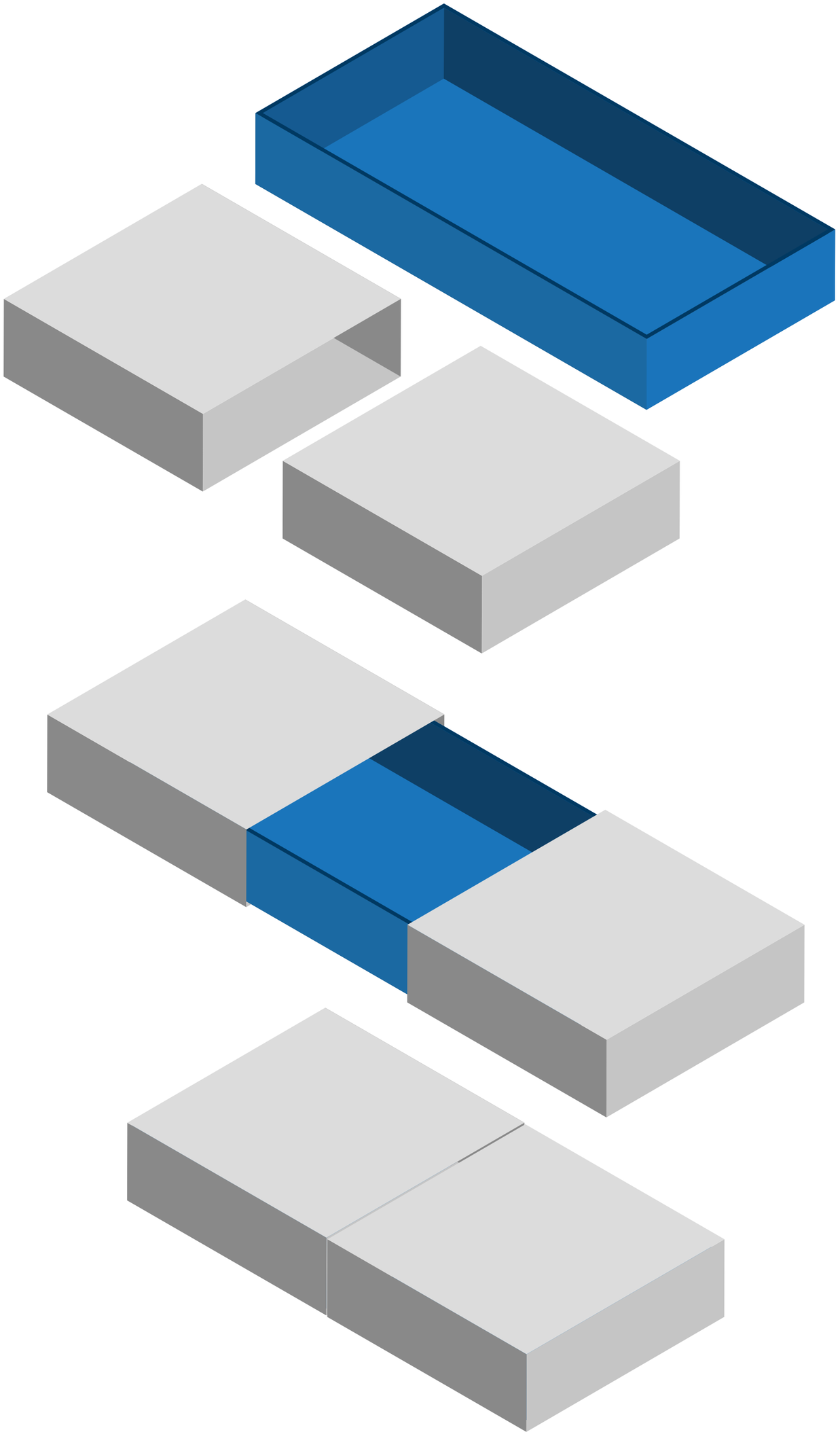

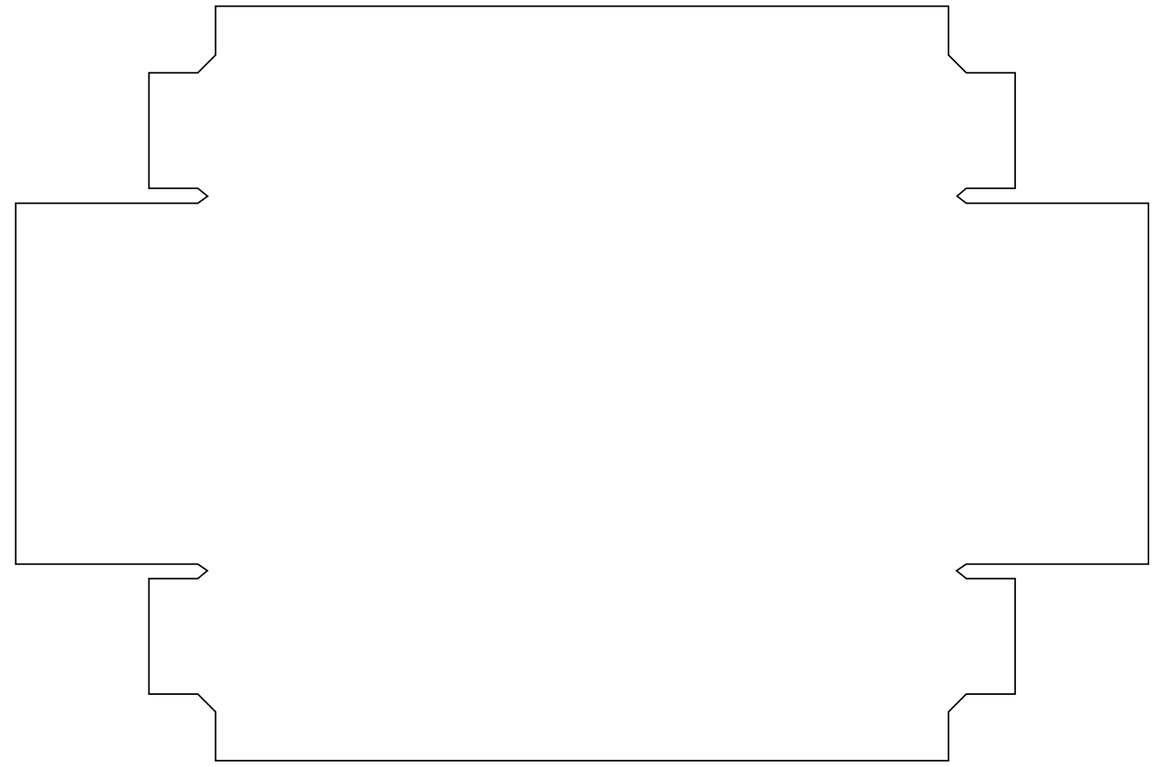

Wrapping Paper Inside Box

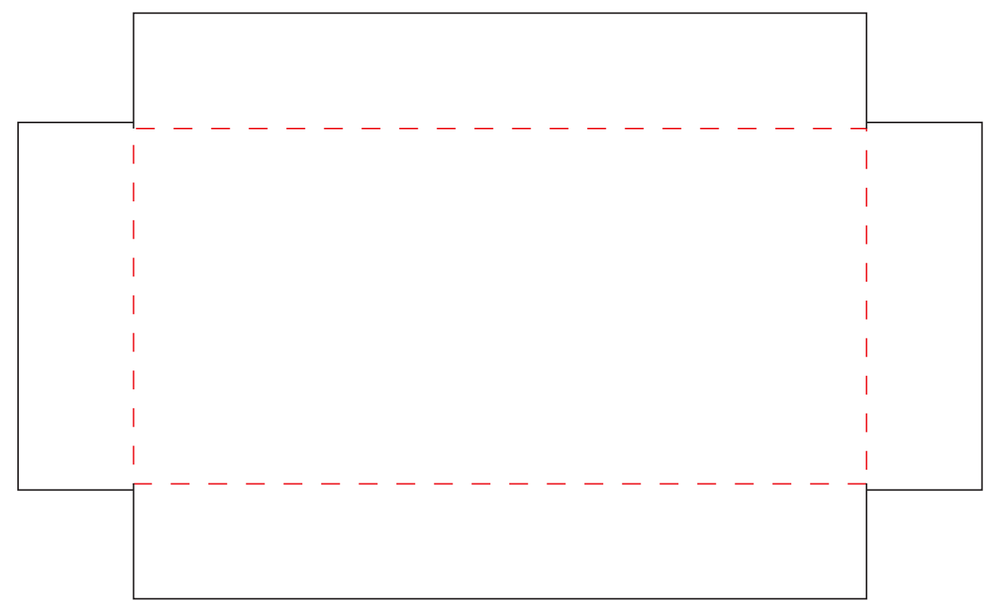

Hard Board Paper Thick 0.12 cm Inside Box

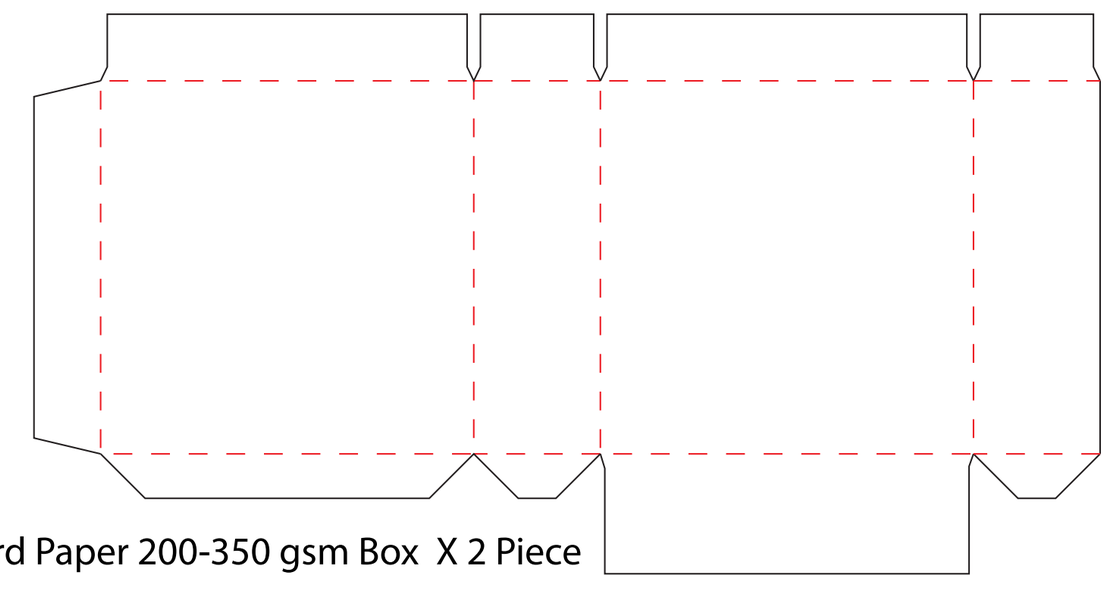

Hard Paper 200-350 gsm Box X 2 Piece

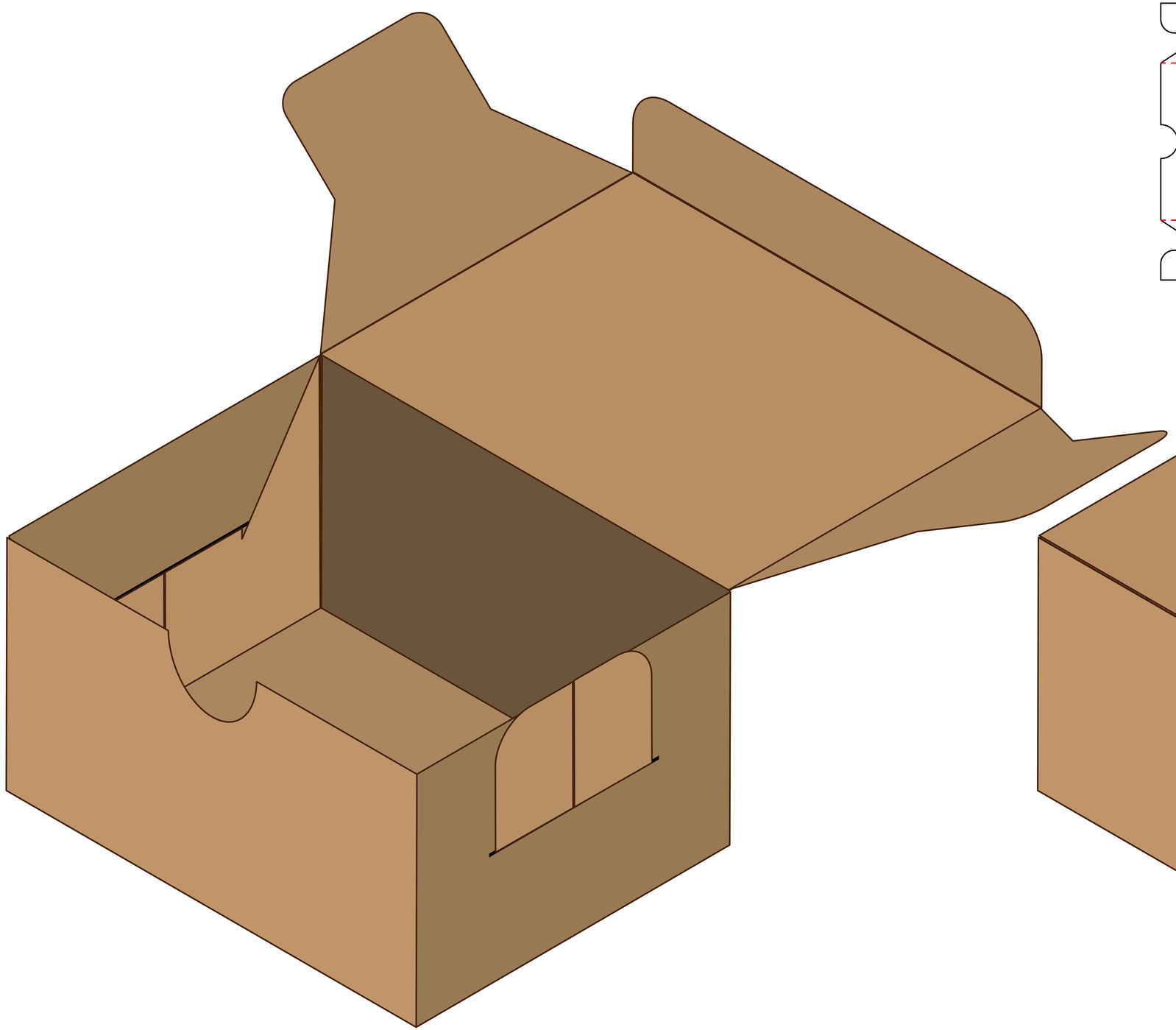

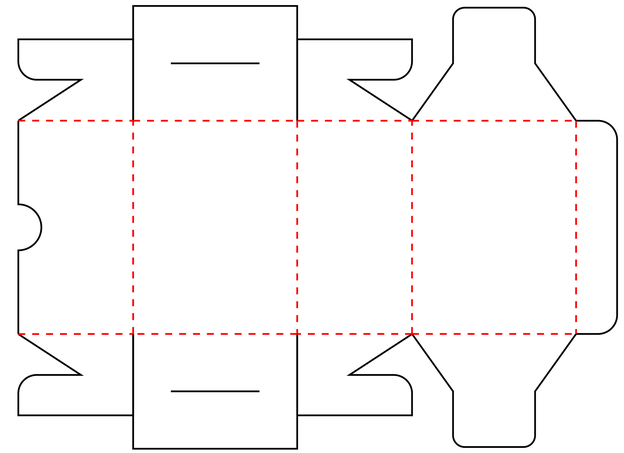

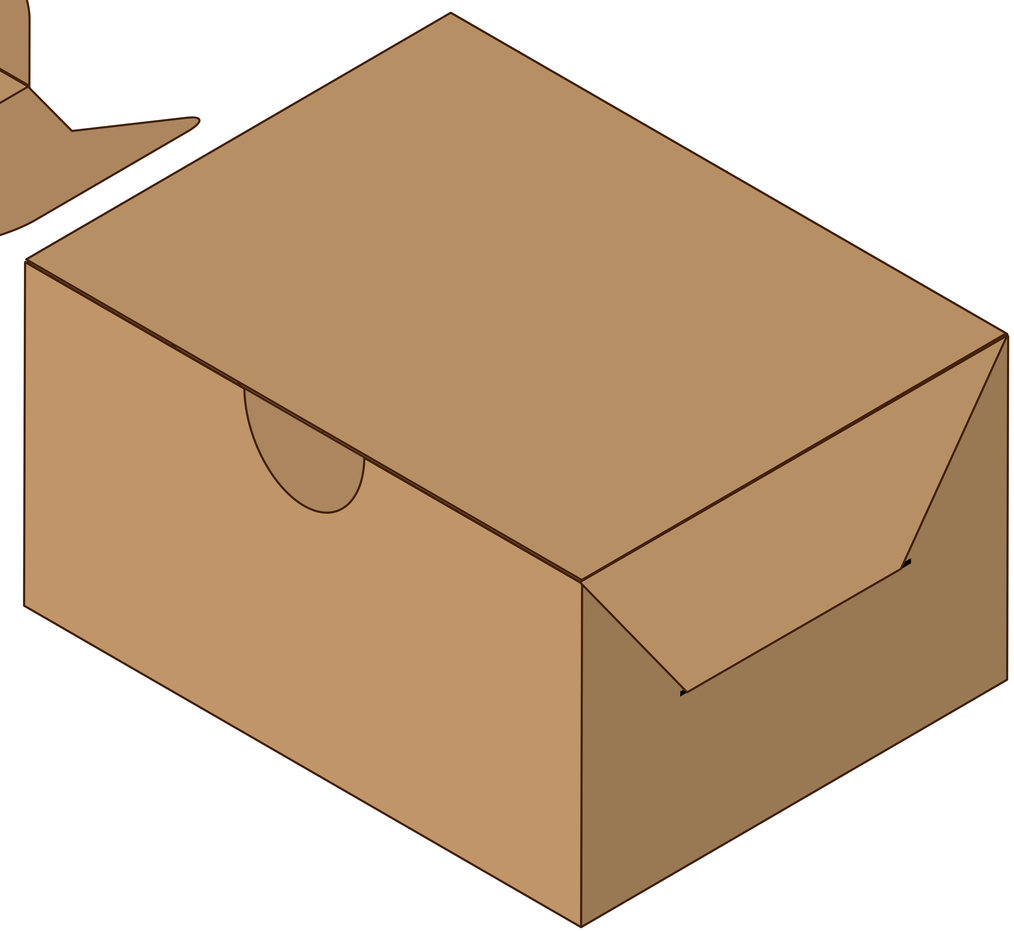

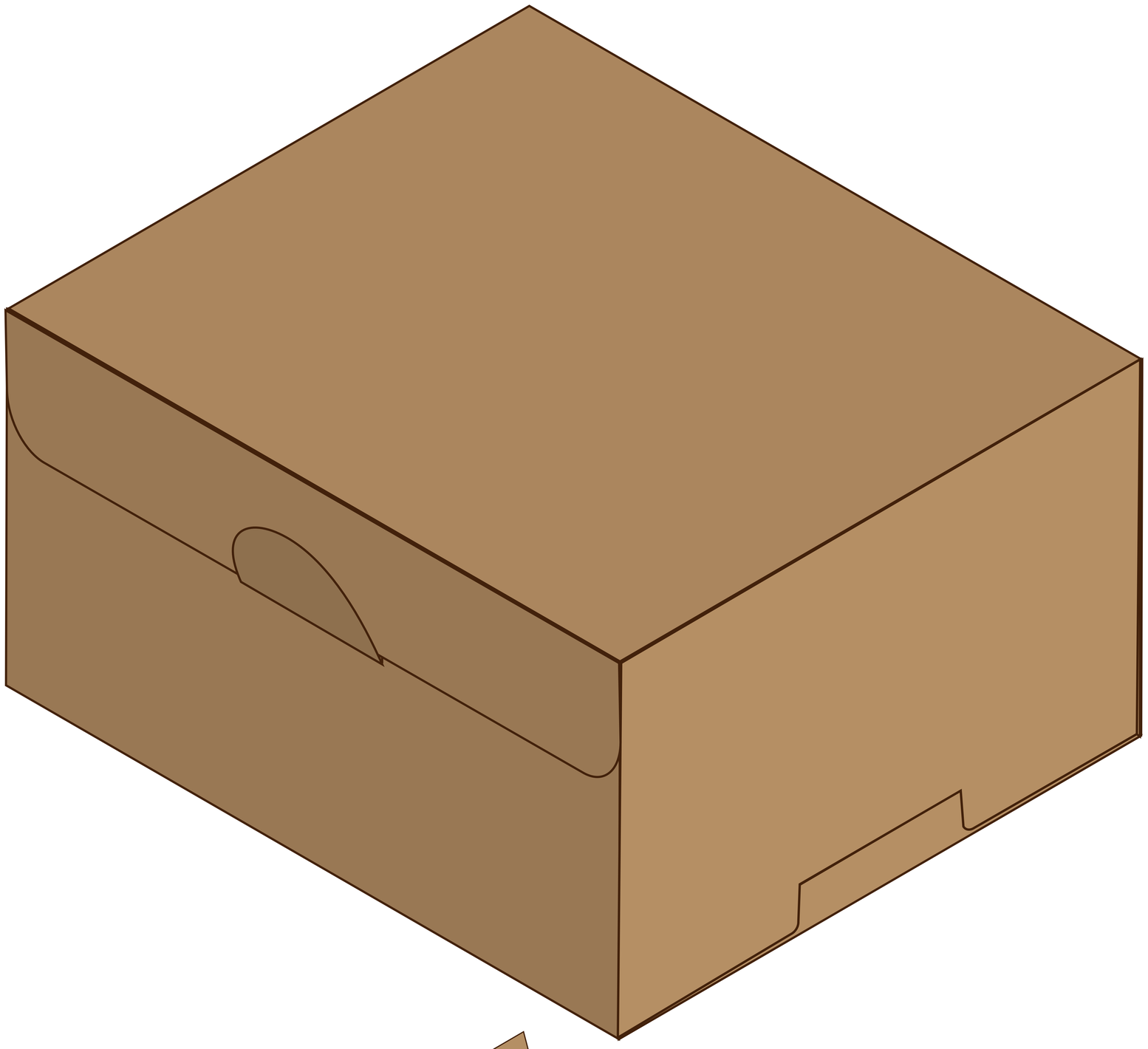

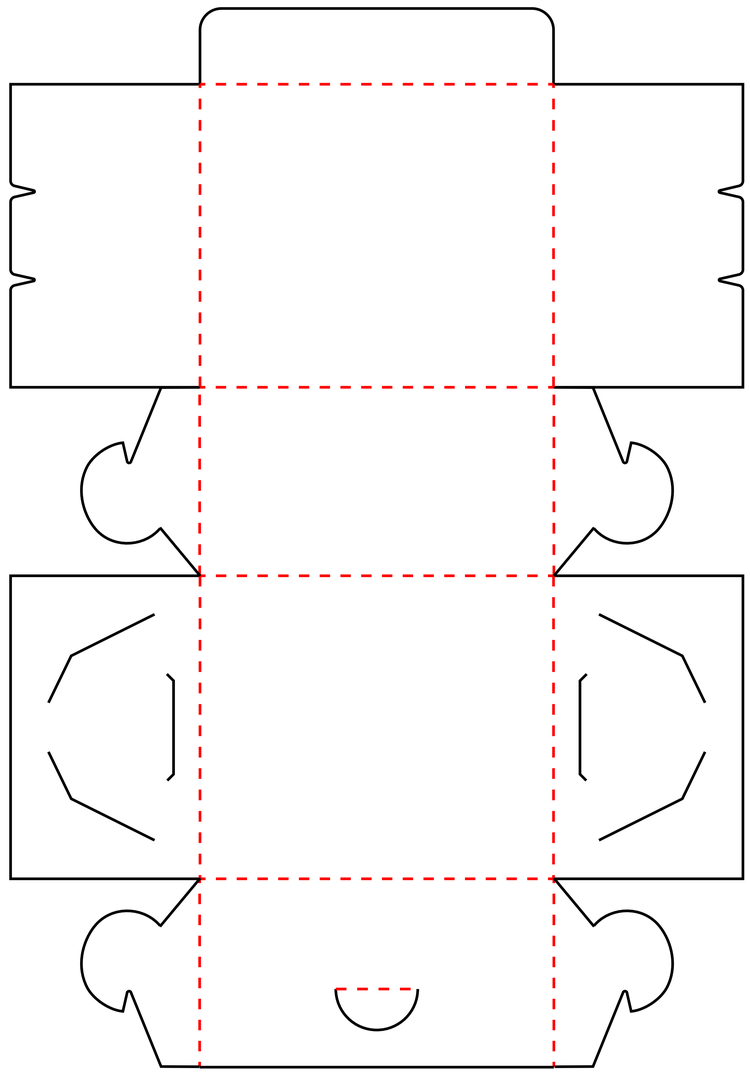

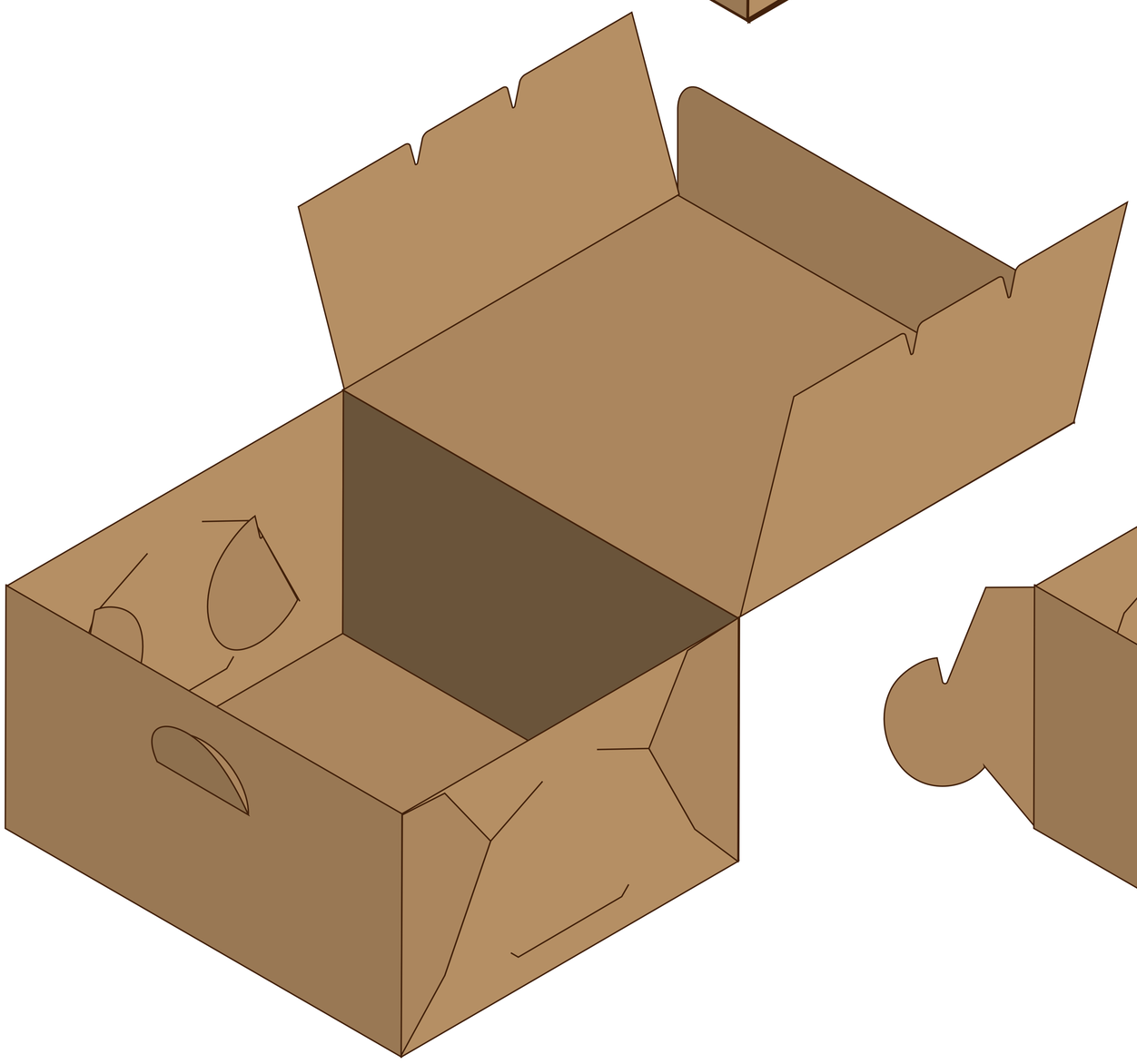

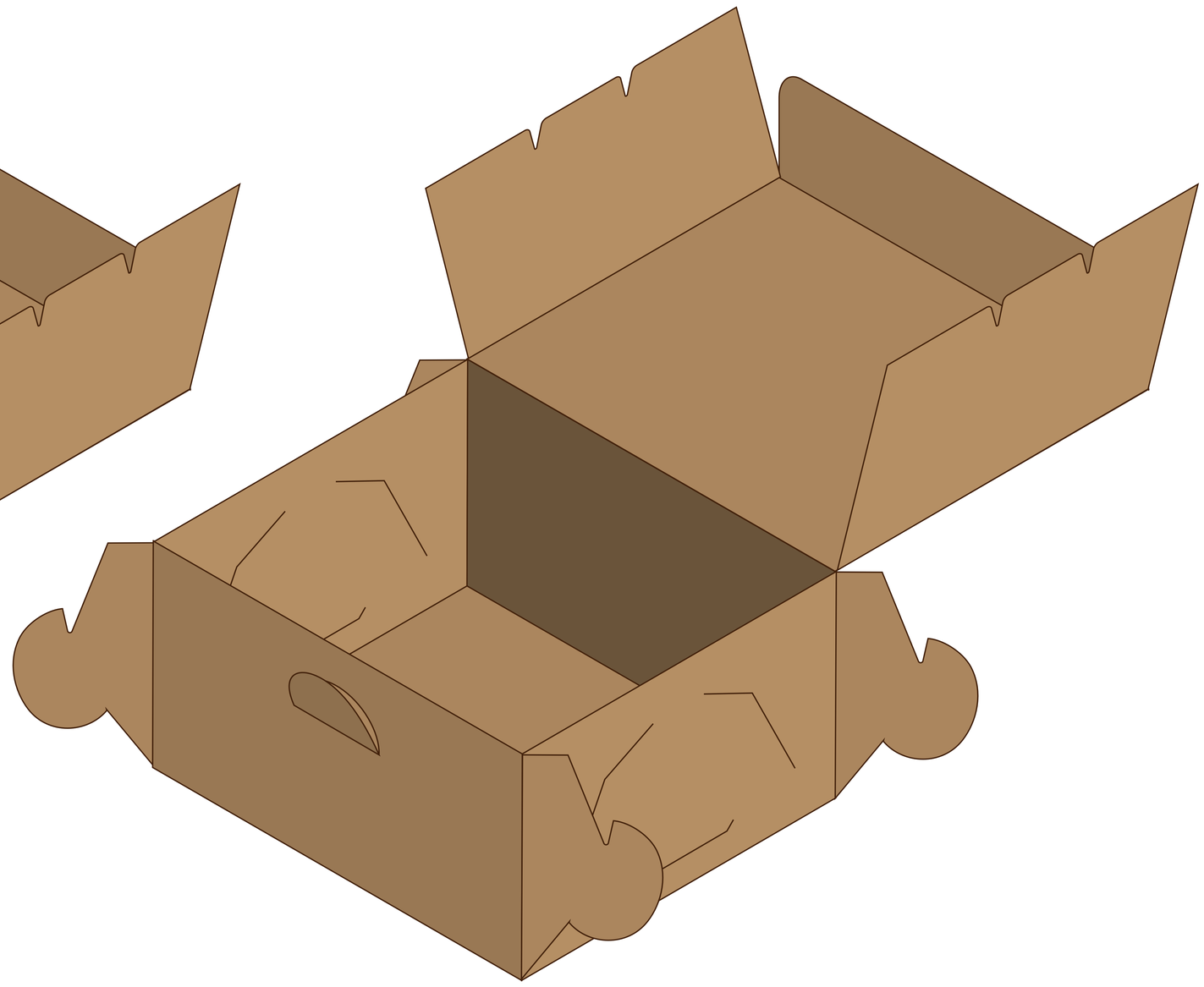

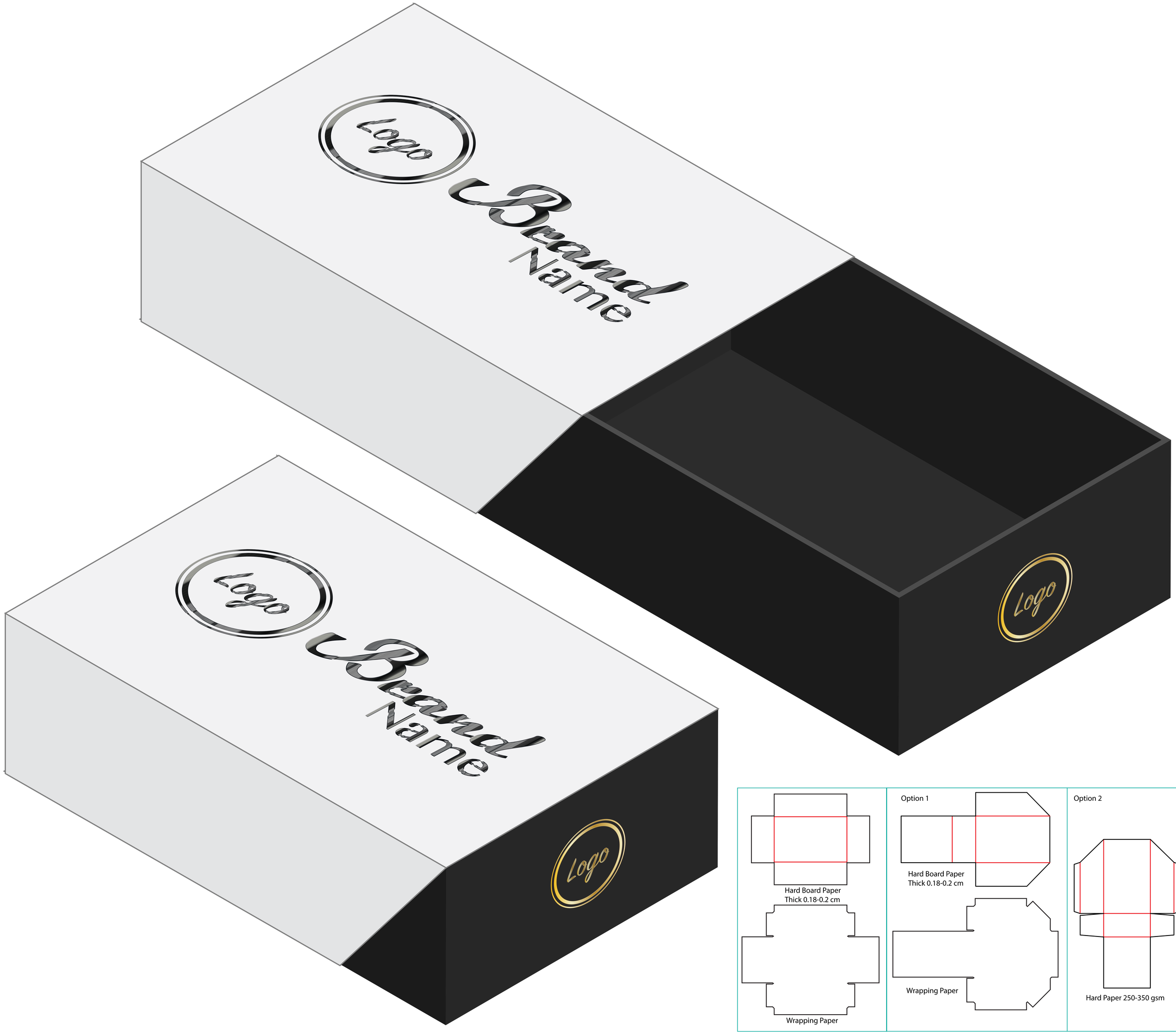
Logo
Brand
Name
Logo
Logo
Brand
Name
Logo
Hard Board Paper
Thick 0.18-0.2 cm
Wrapping Paper
Option 1
Hard Board Paper
Thick 0.18-0.2 cm
Wrapping Paper
Option 2
Hard Paper 250-350 gsm

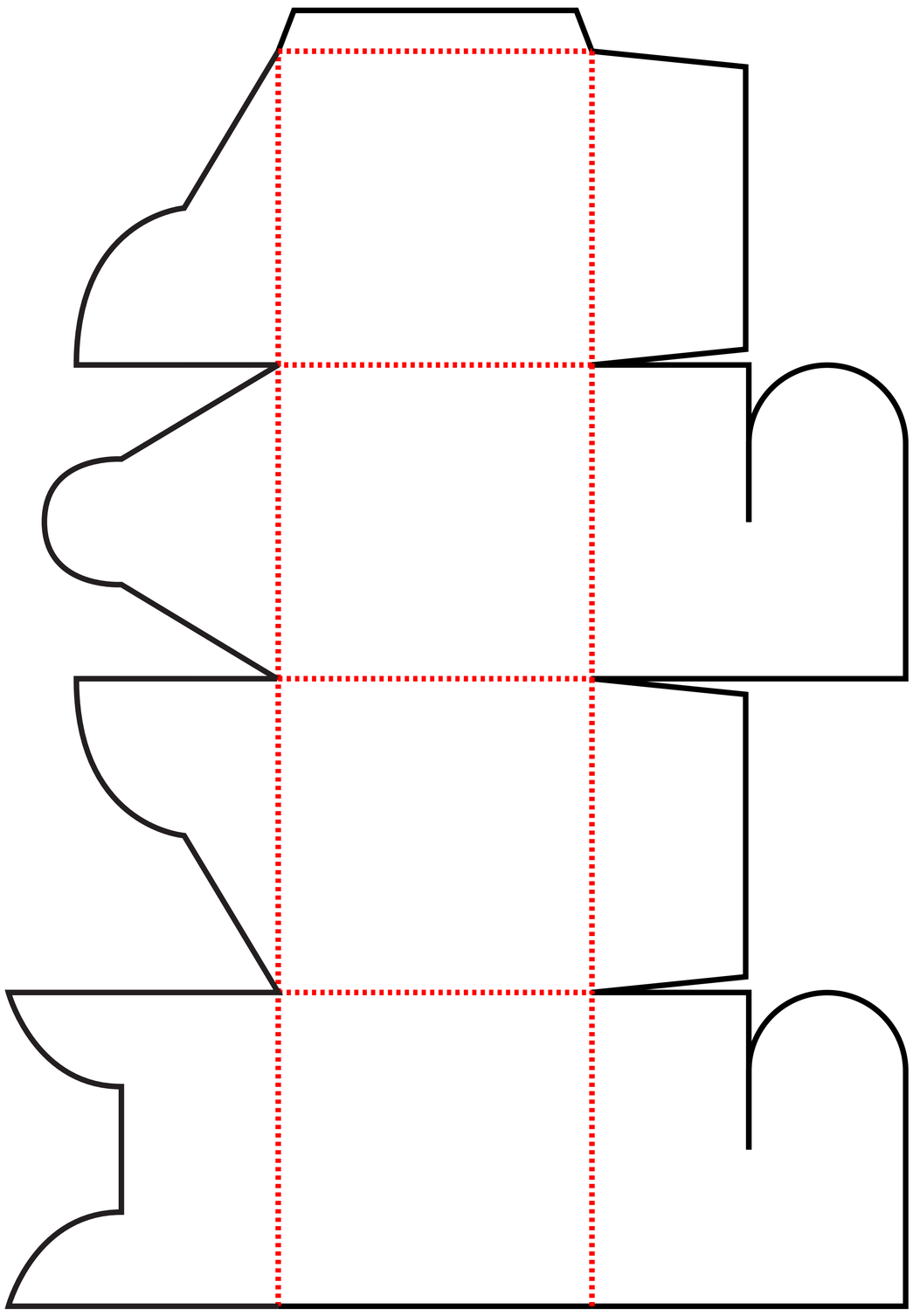

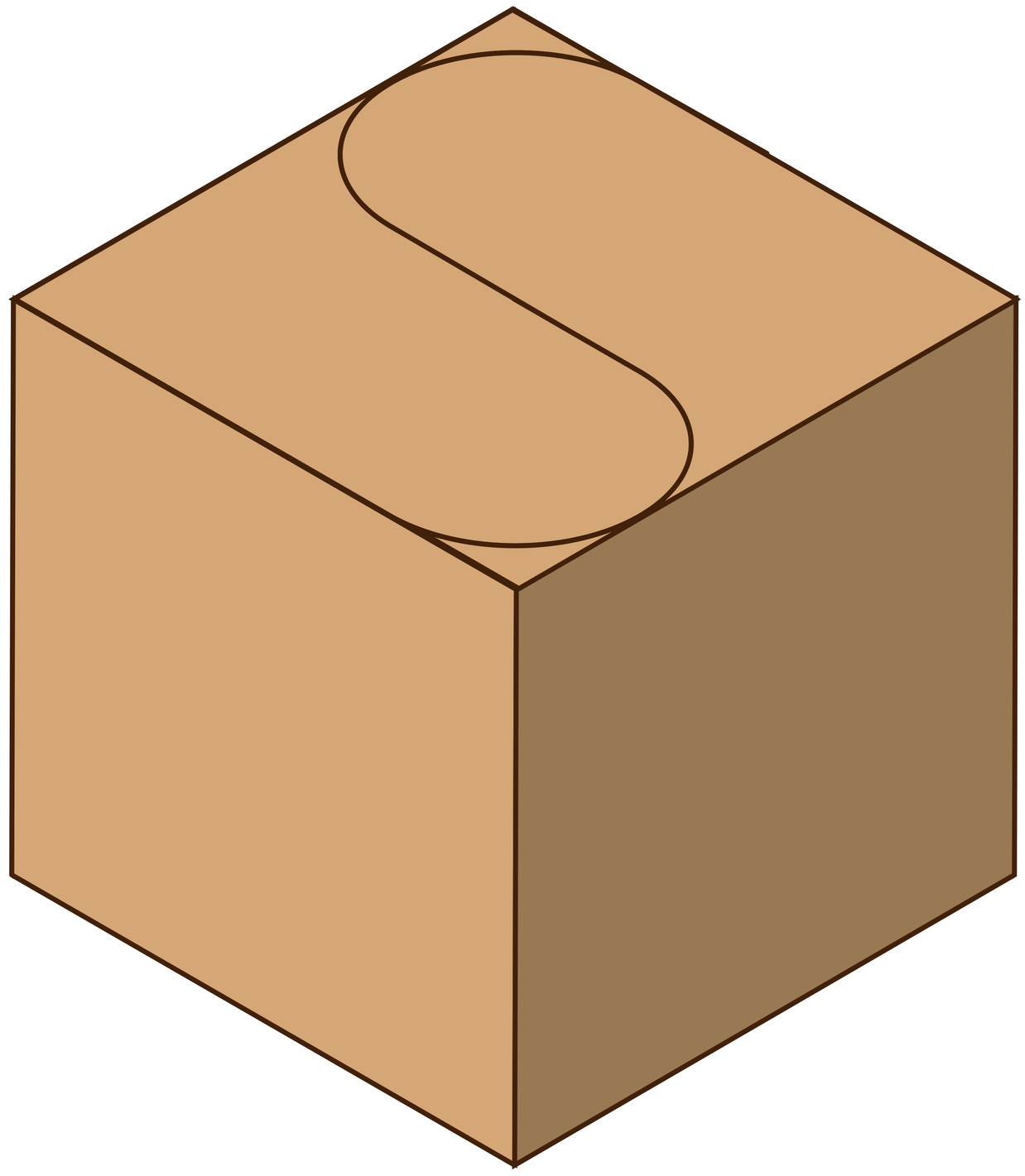

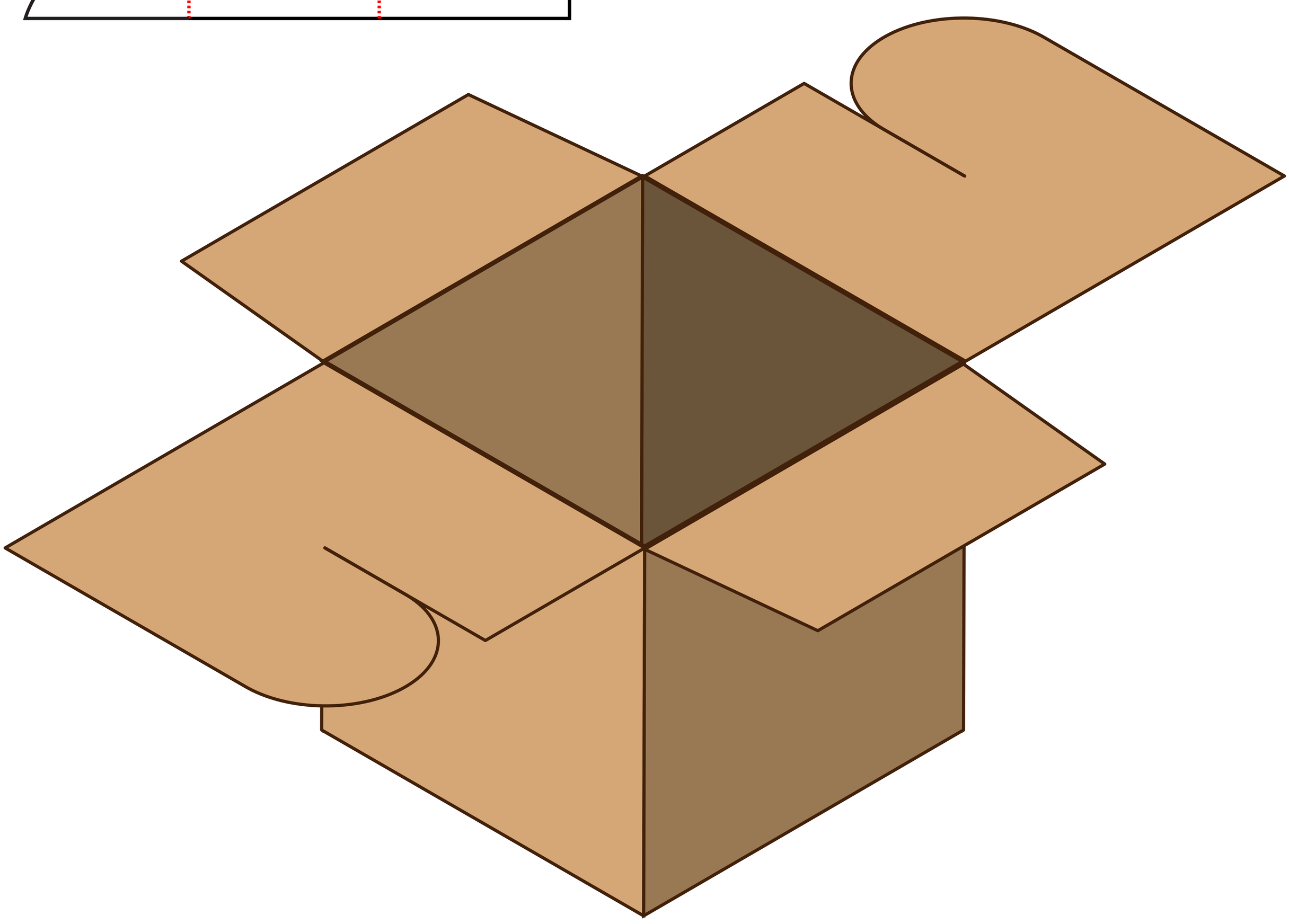

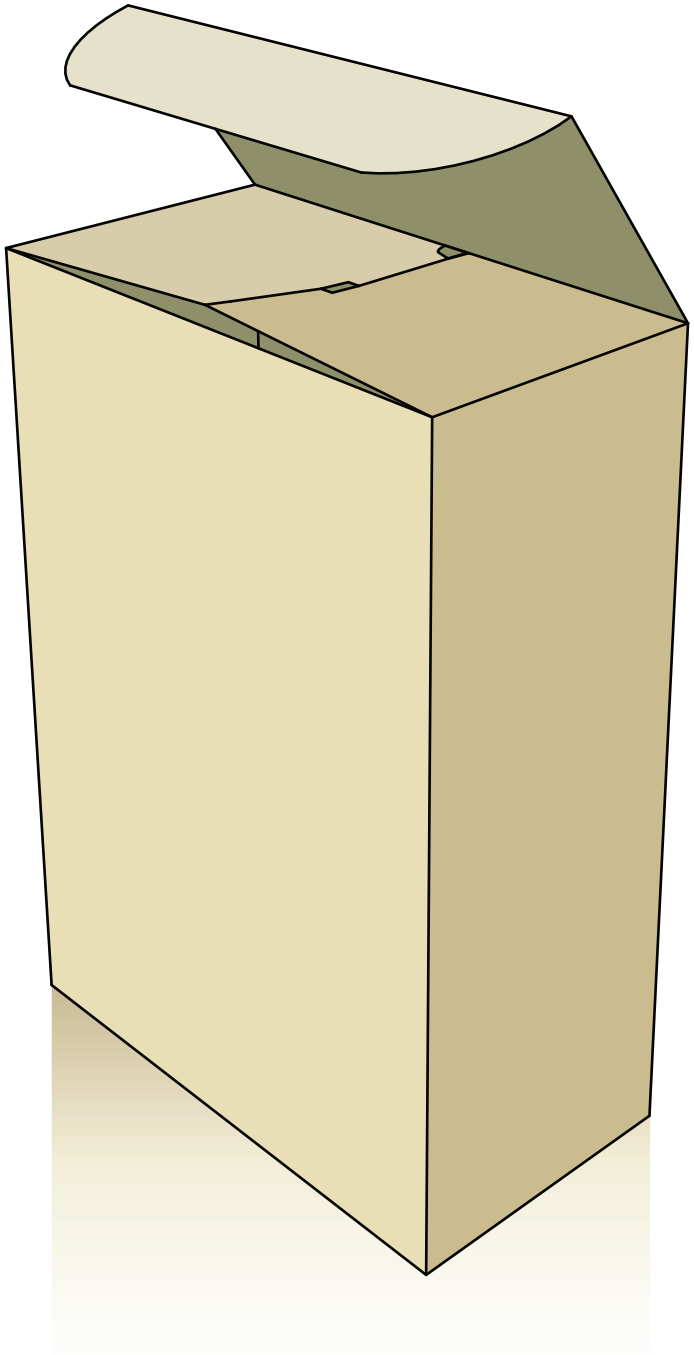

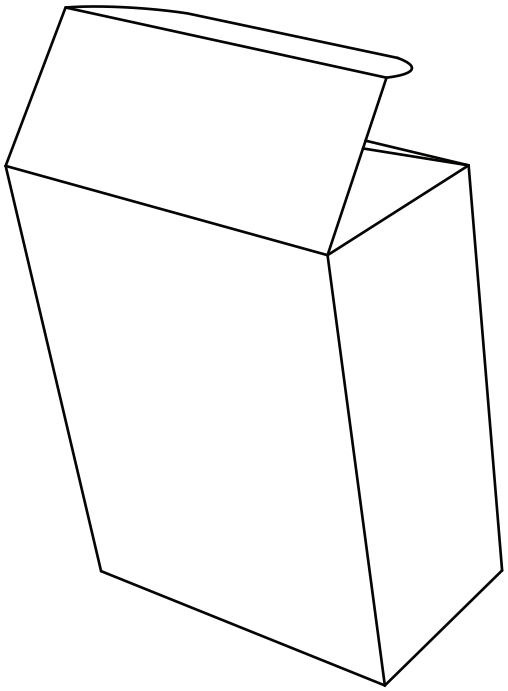

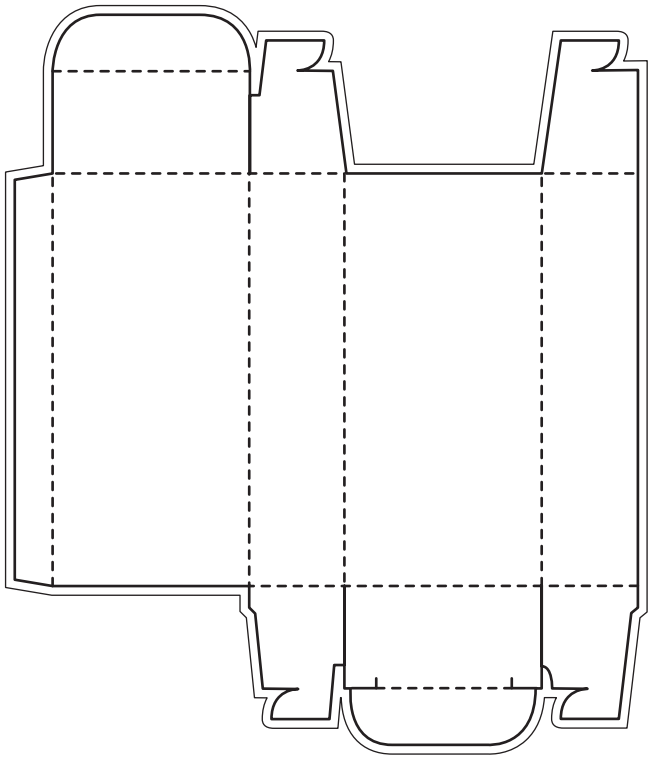

printing bleed

die-cuting line

folding line

perforaion line

zipper line

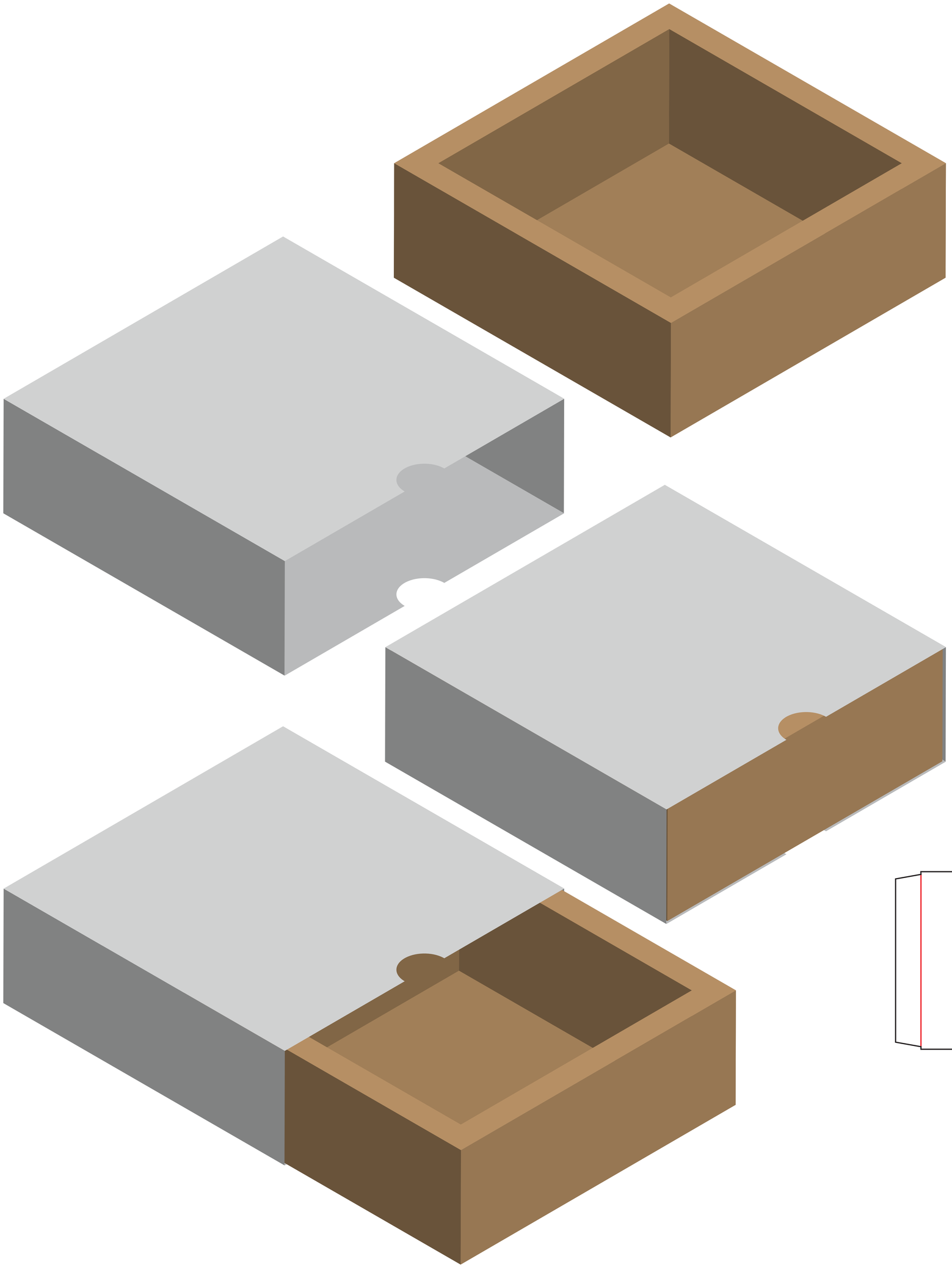

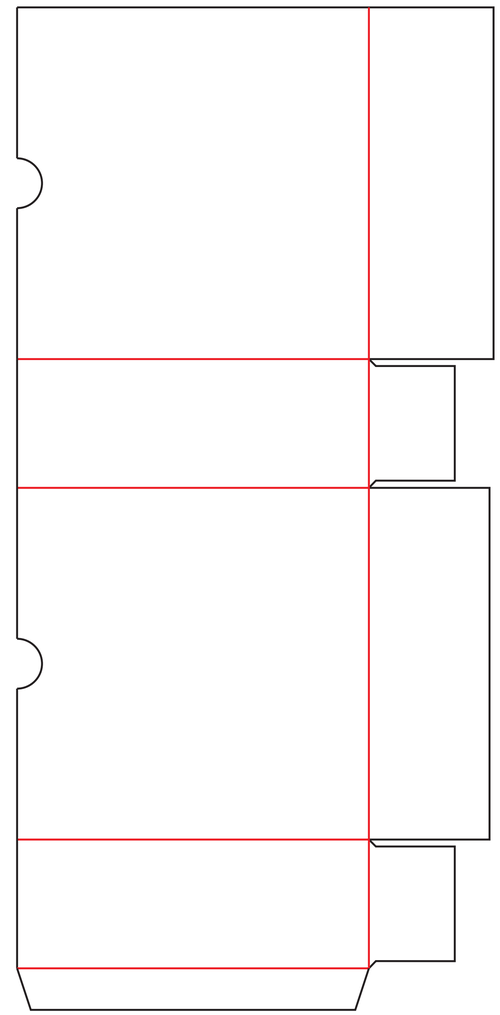

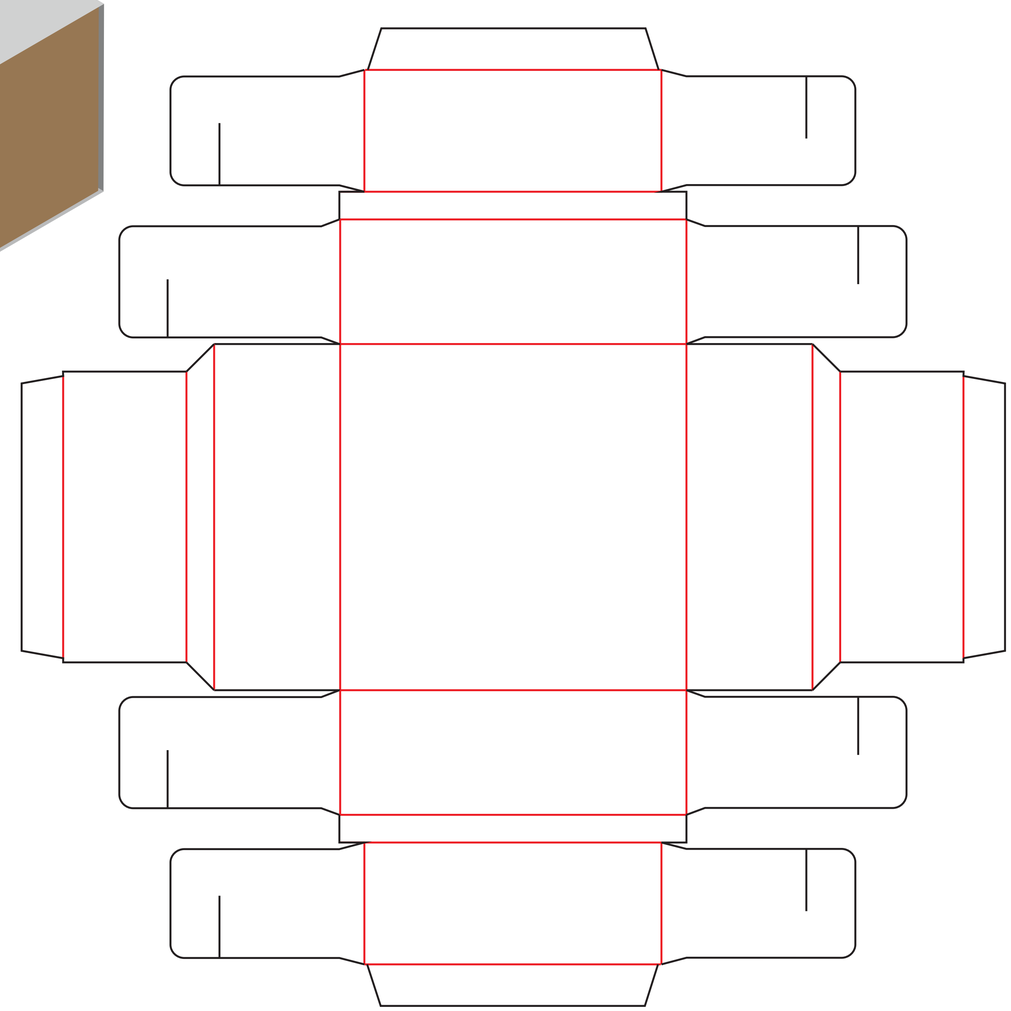

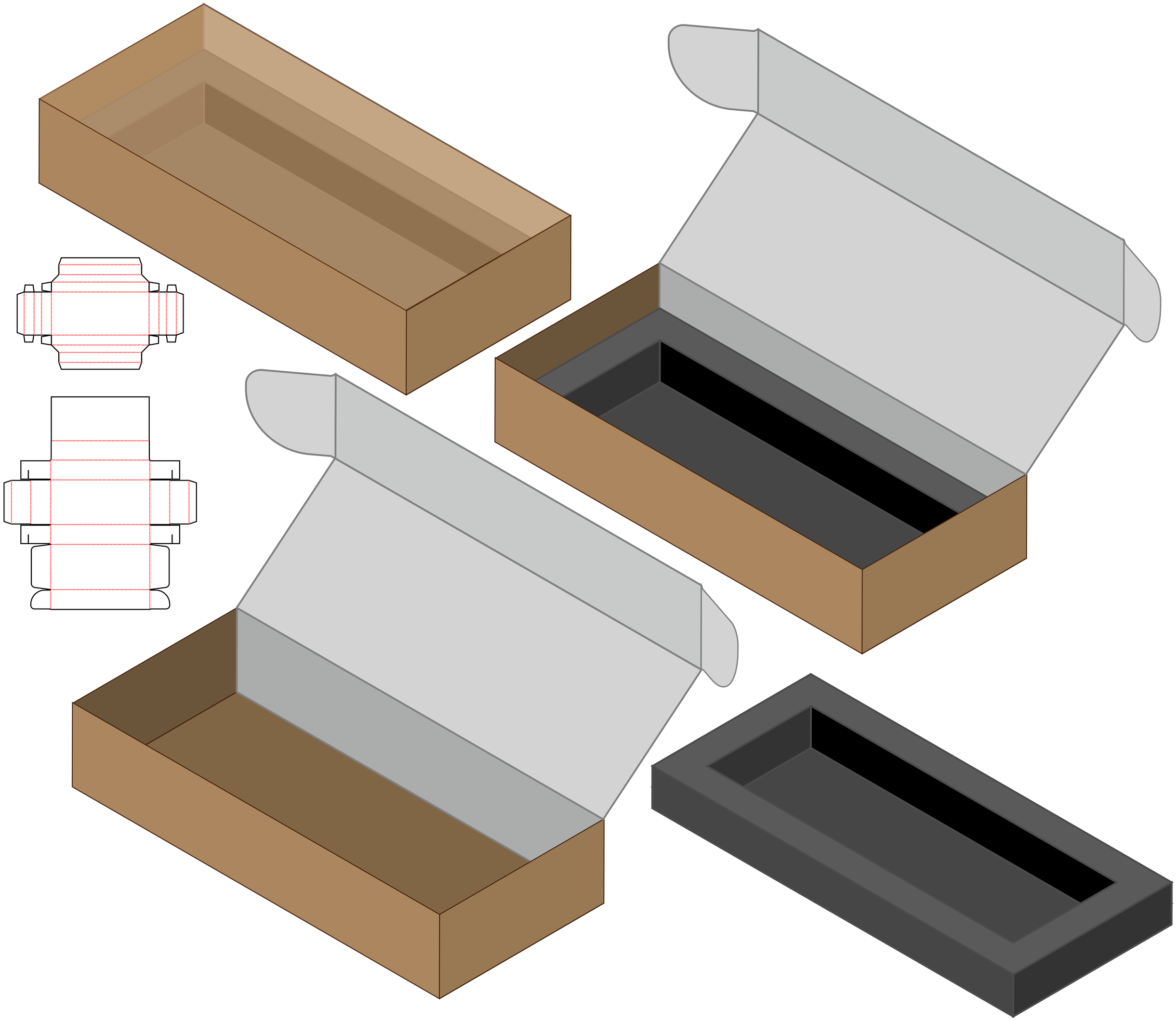

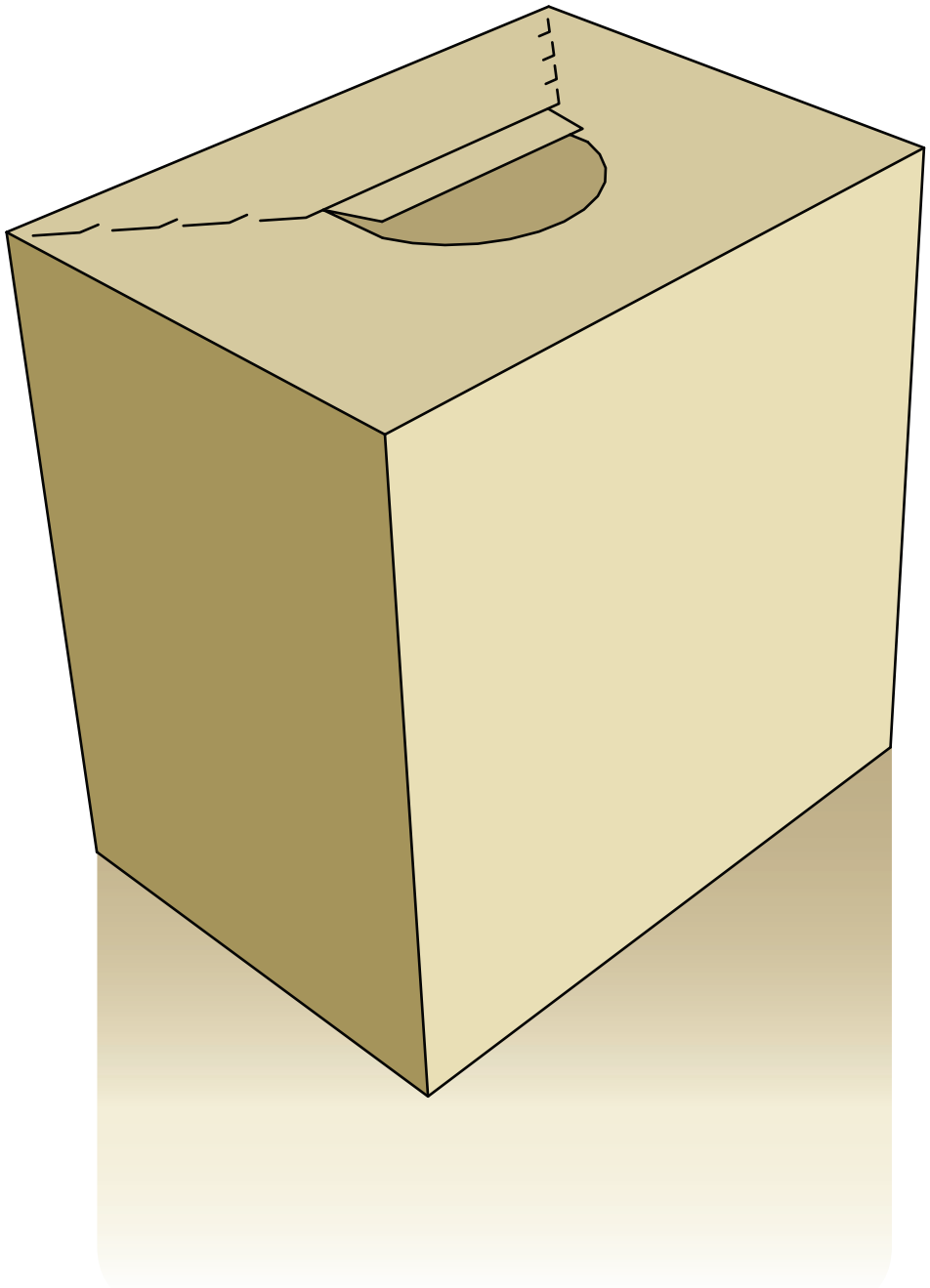

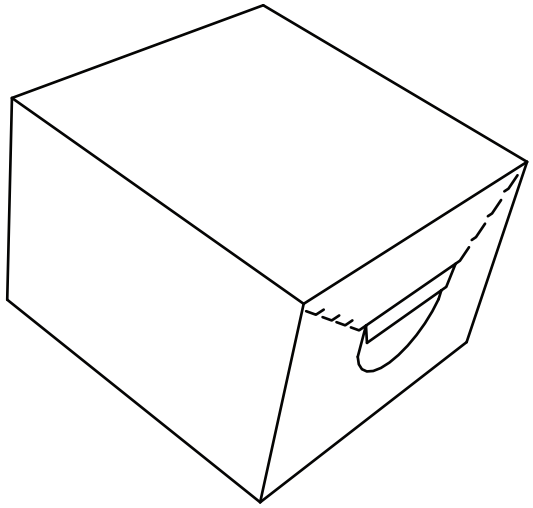

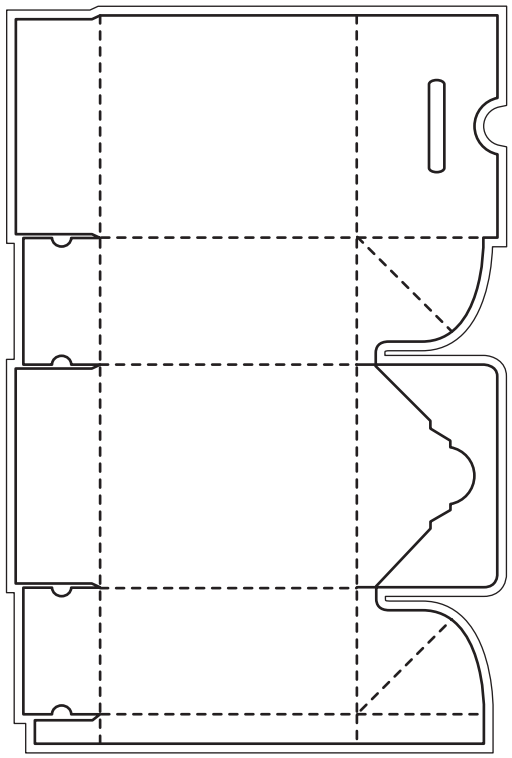

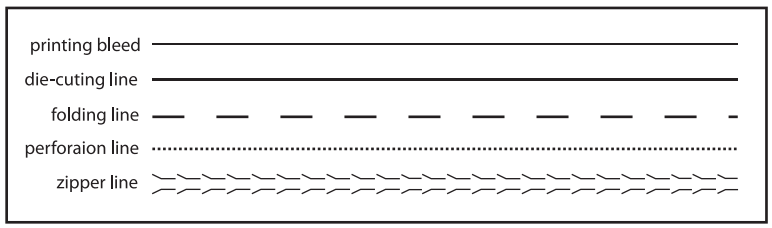
printing bleed
die-cuting line
folding line
perforaion line
zipper line

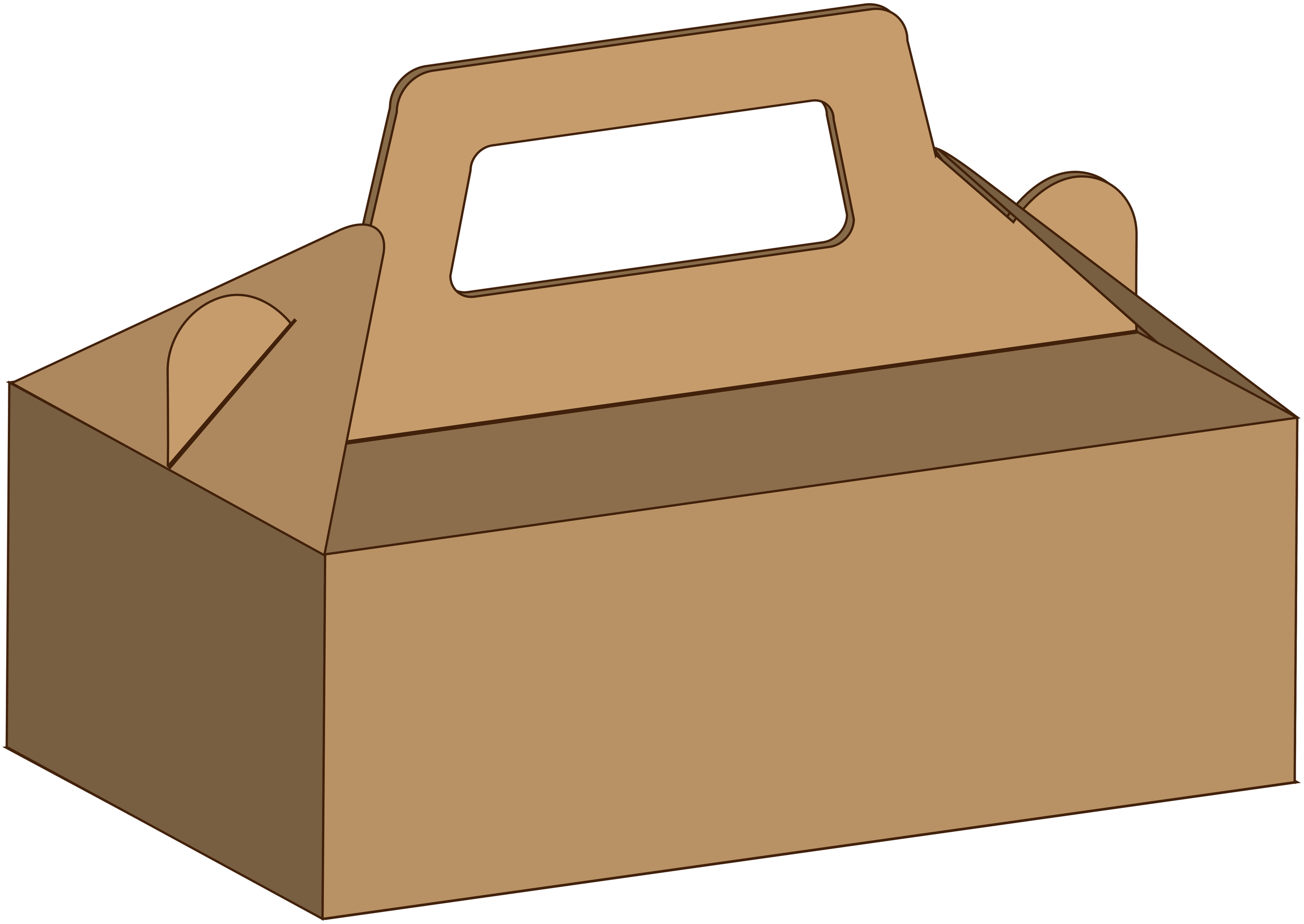

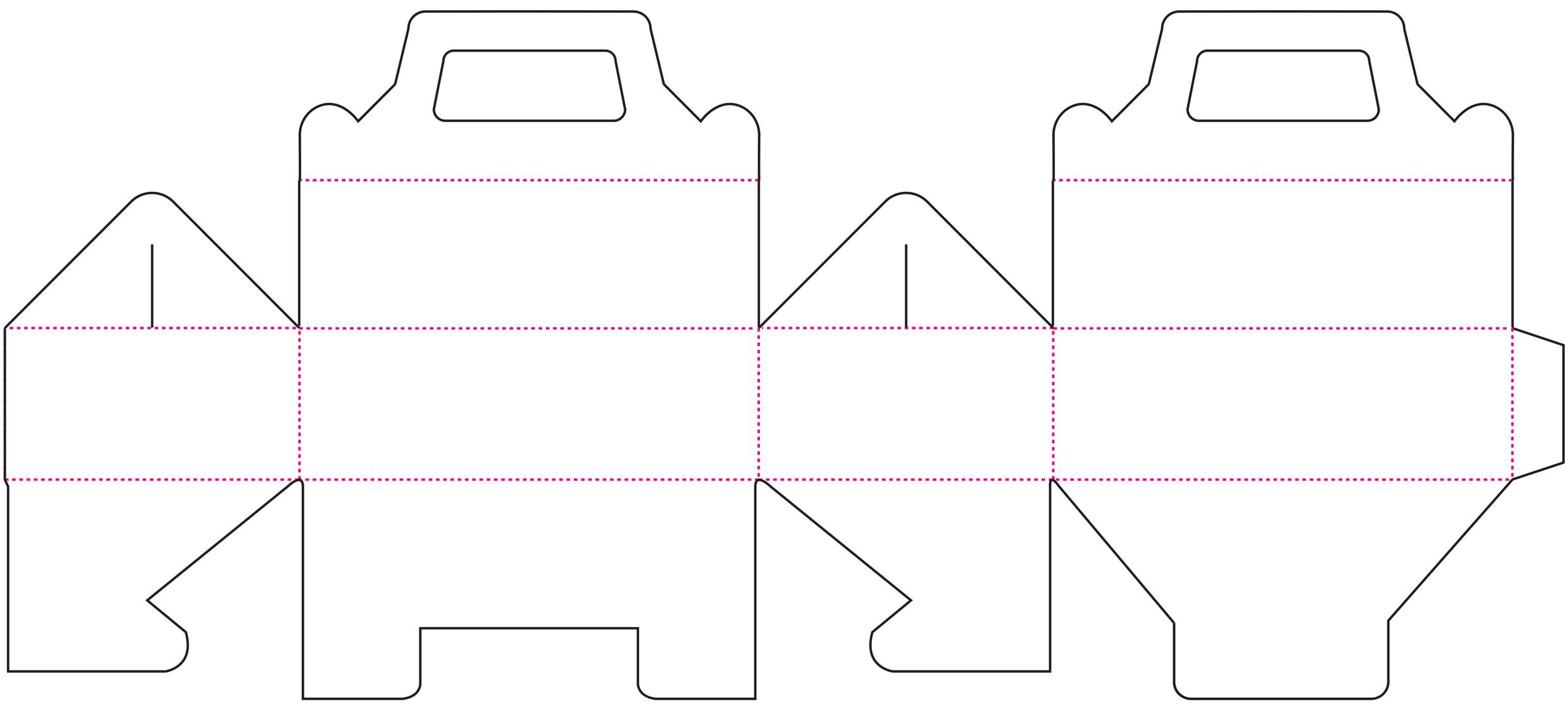

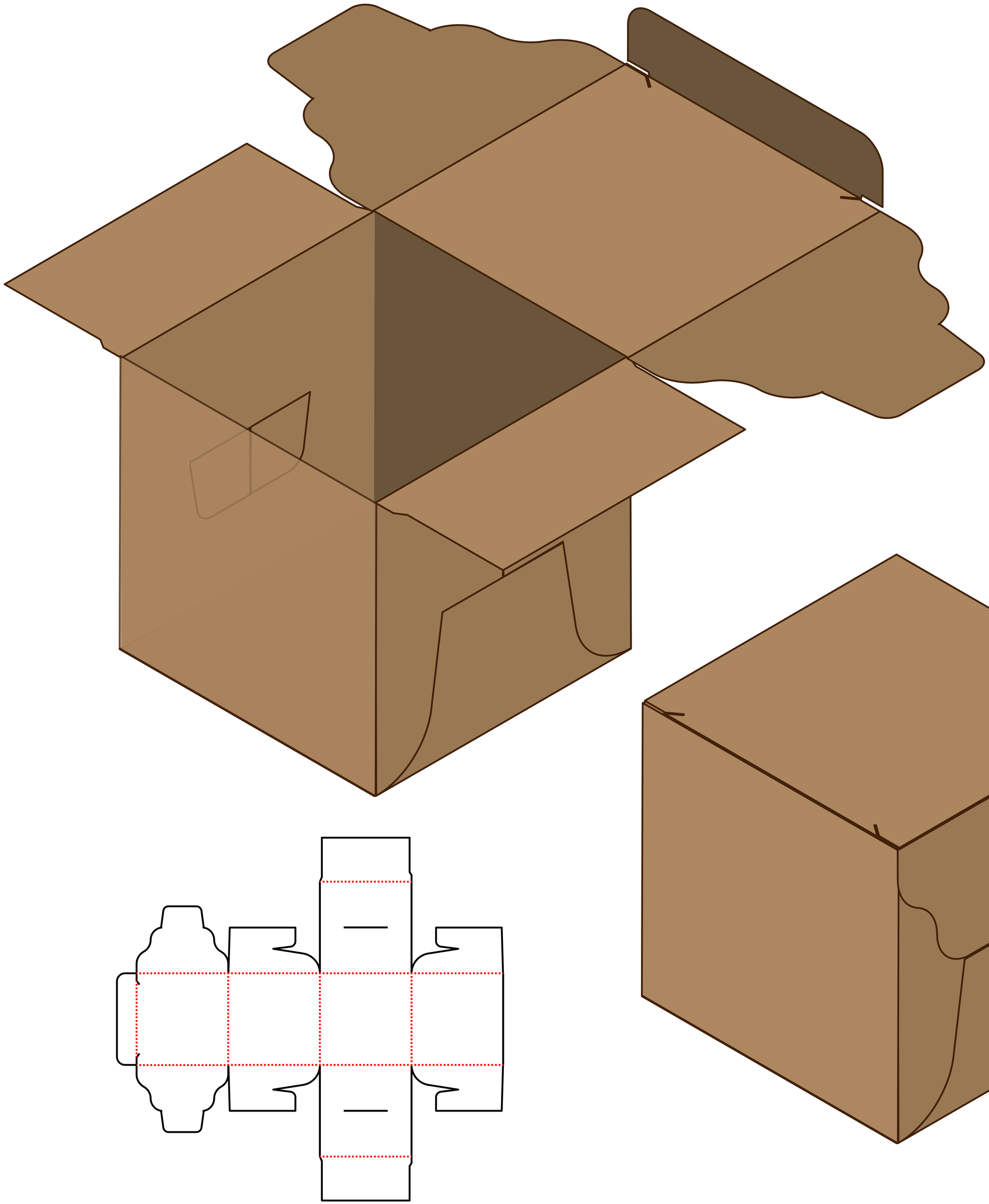

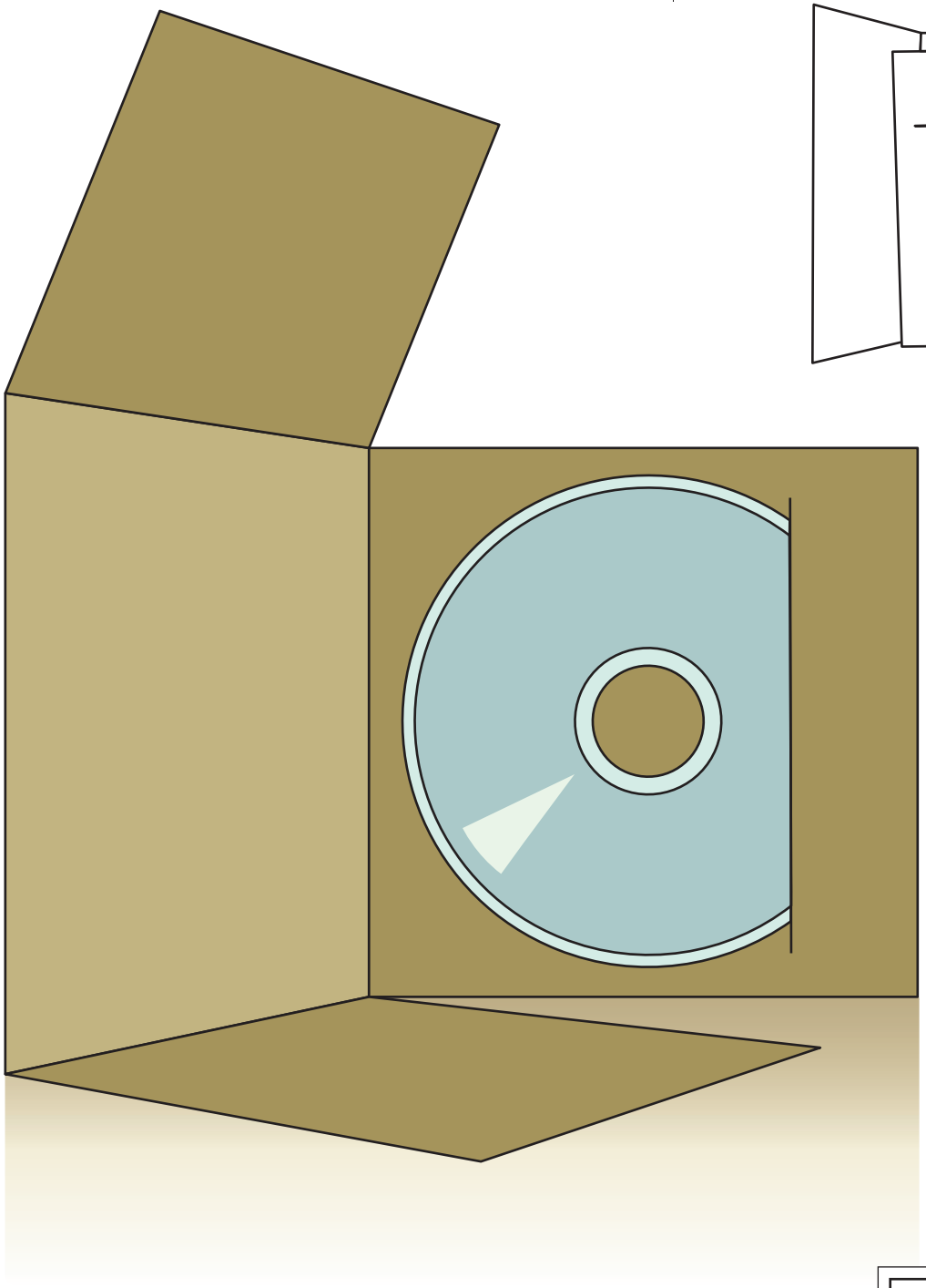

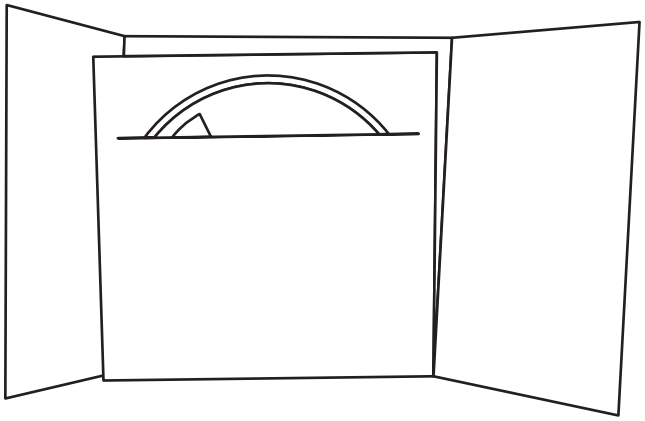

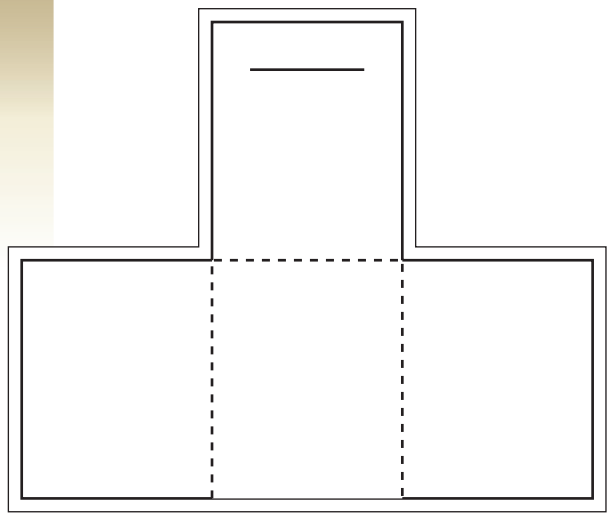

printing bleed

die-cuting line

folding line

perforaion line

zipper line

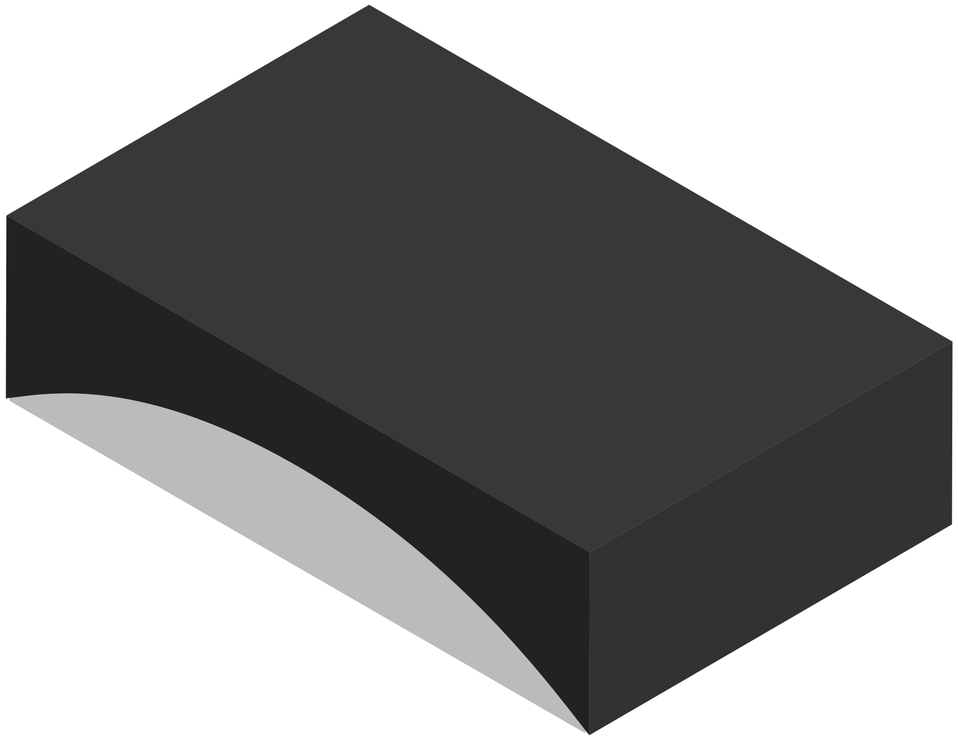

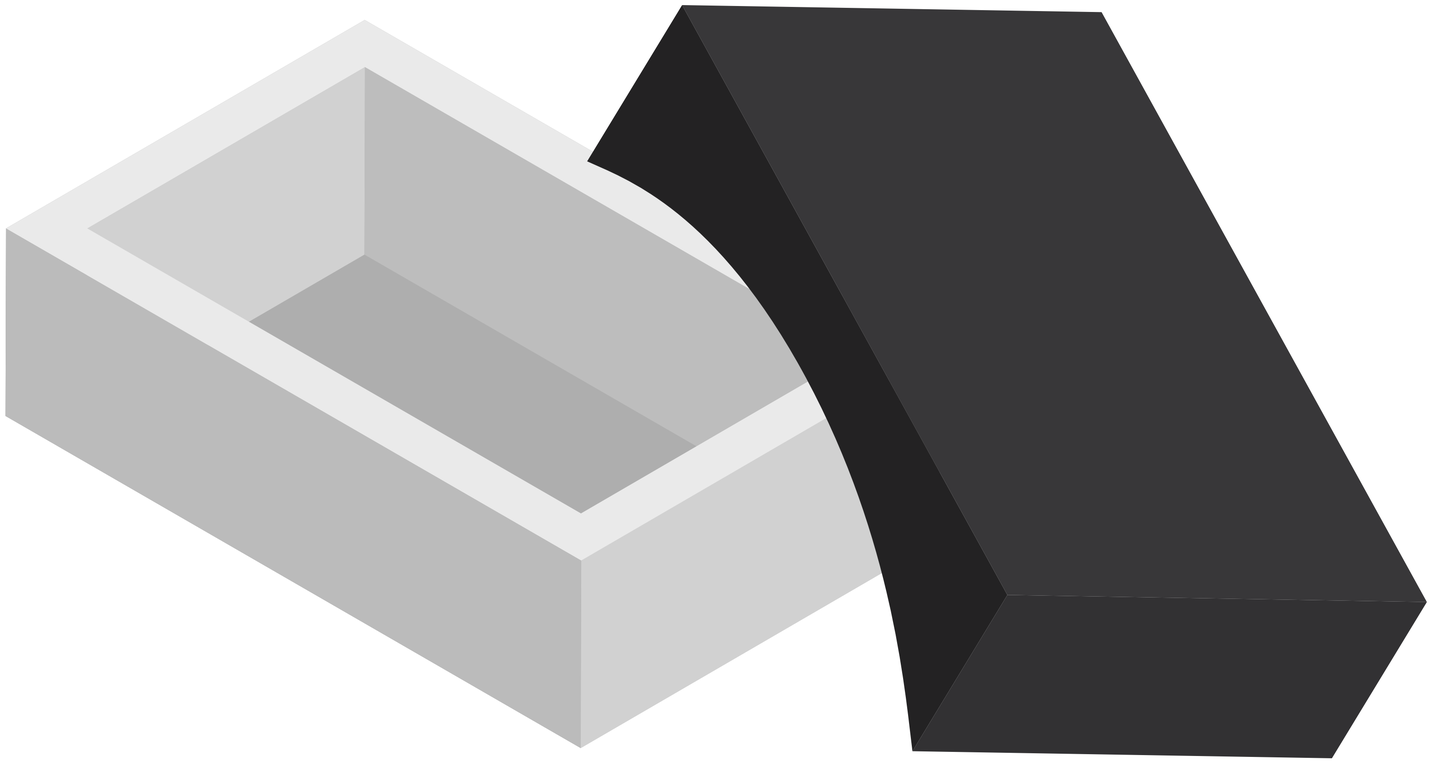

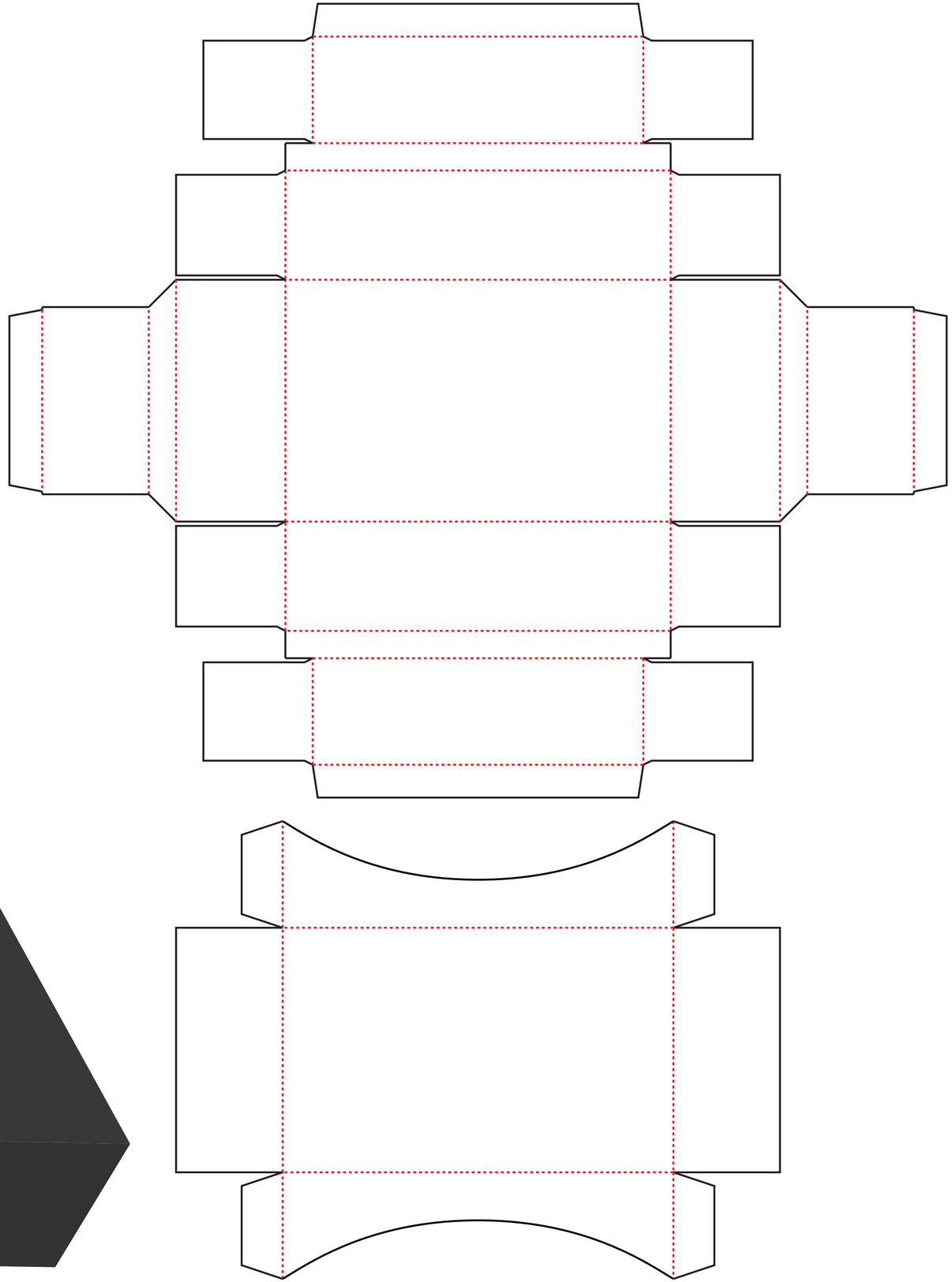

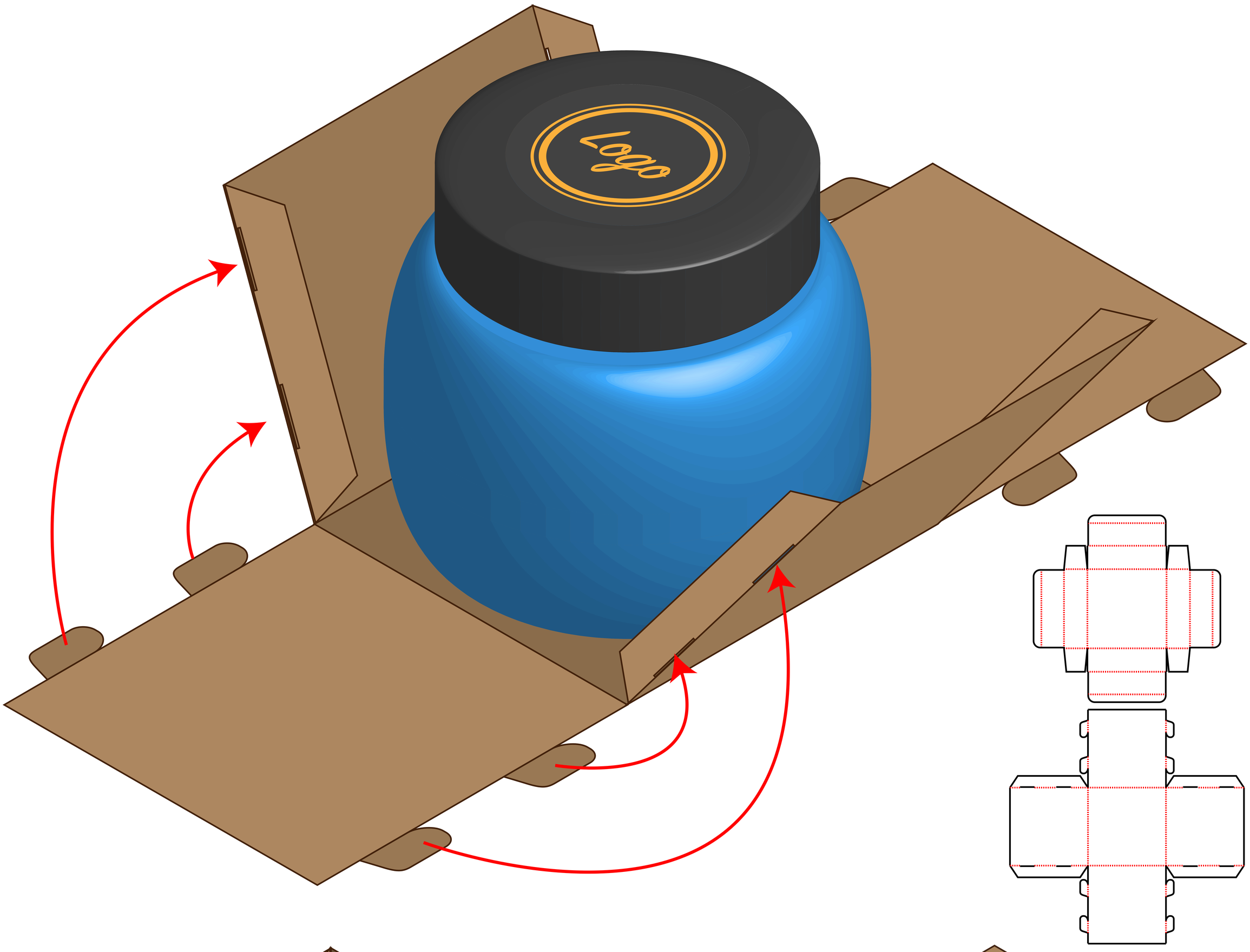
Logo

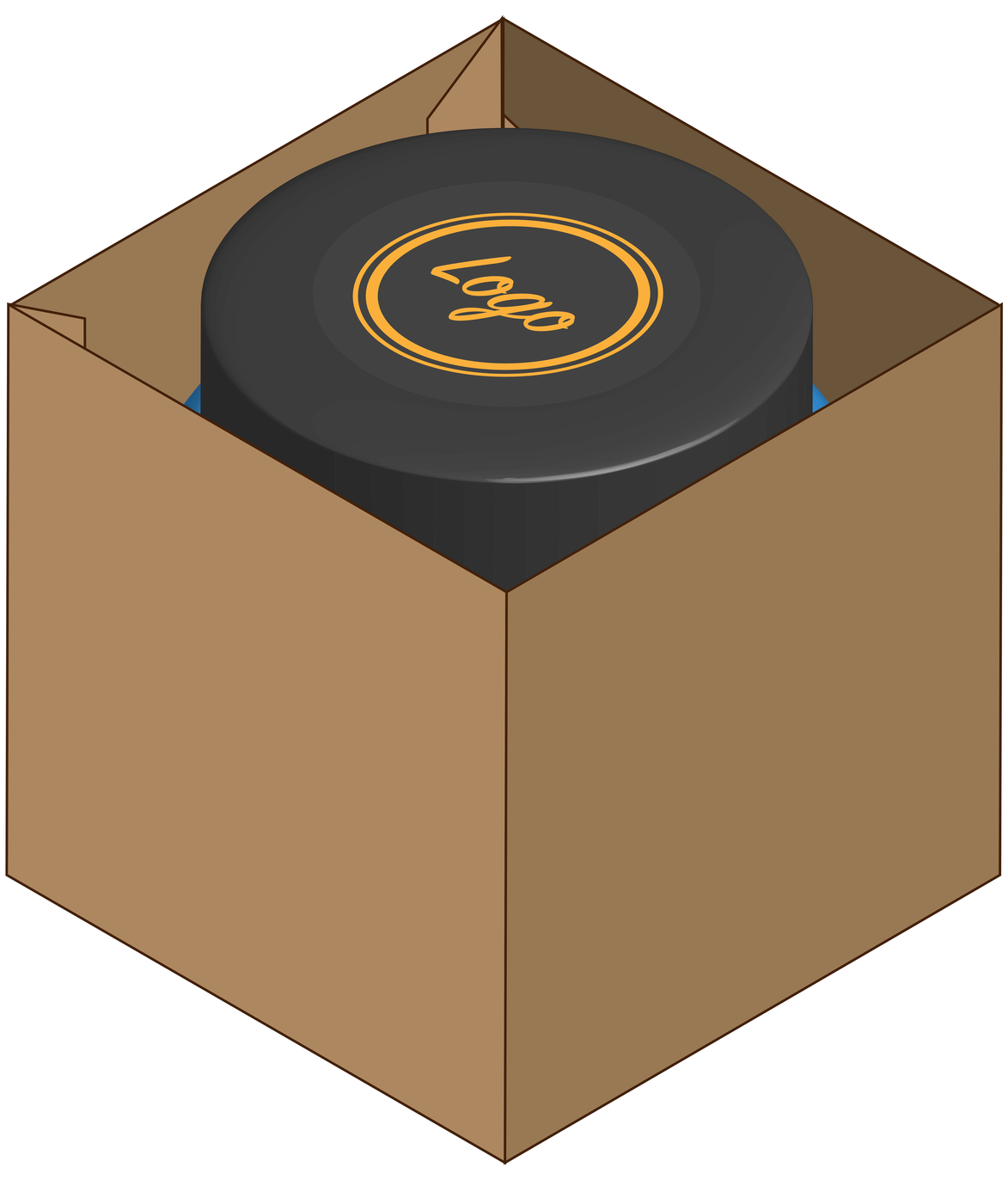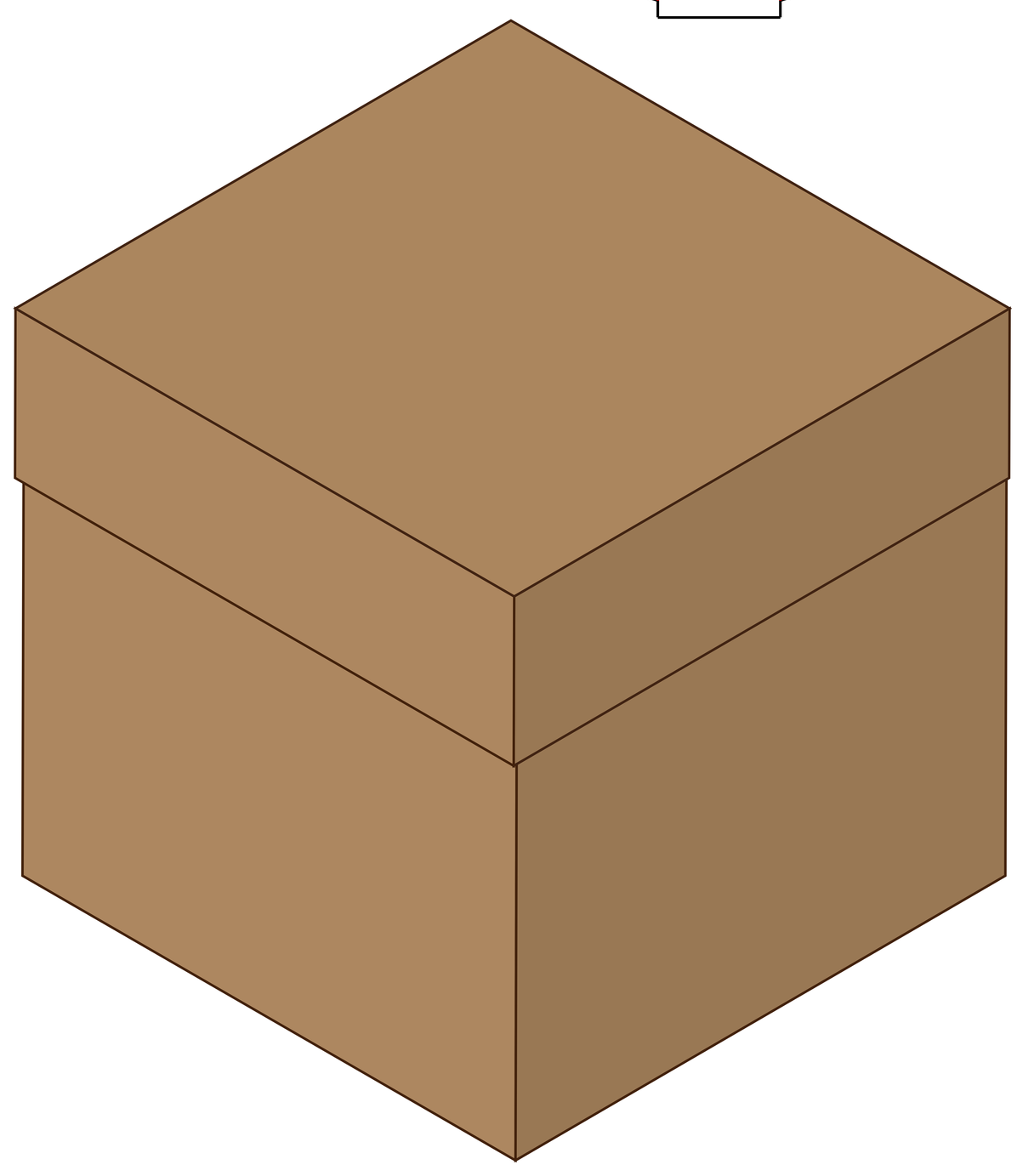
Logo