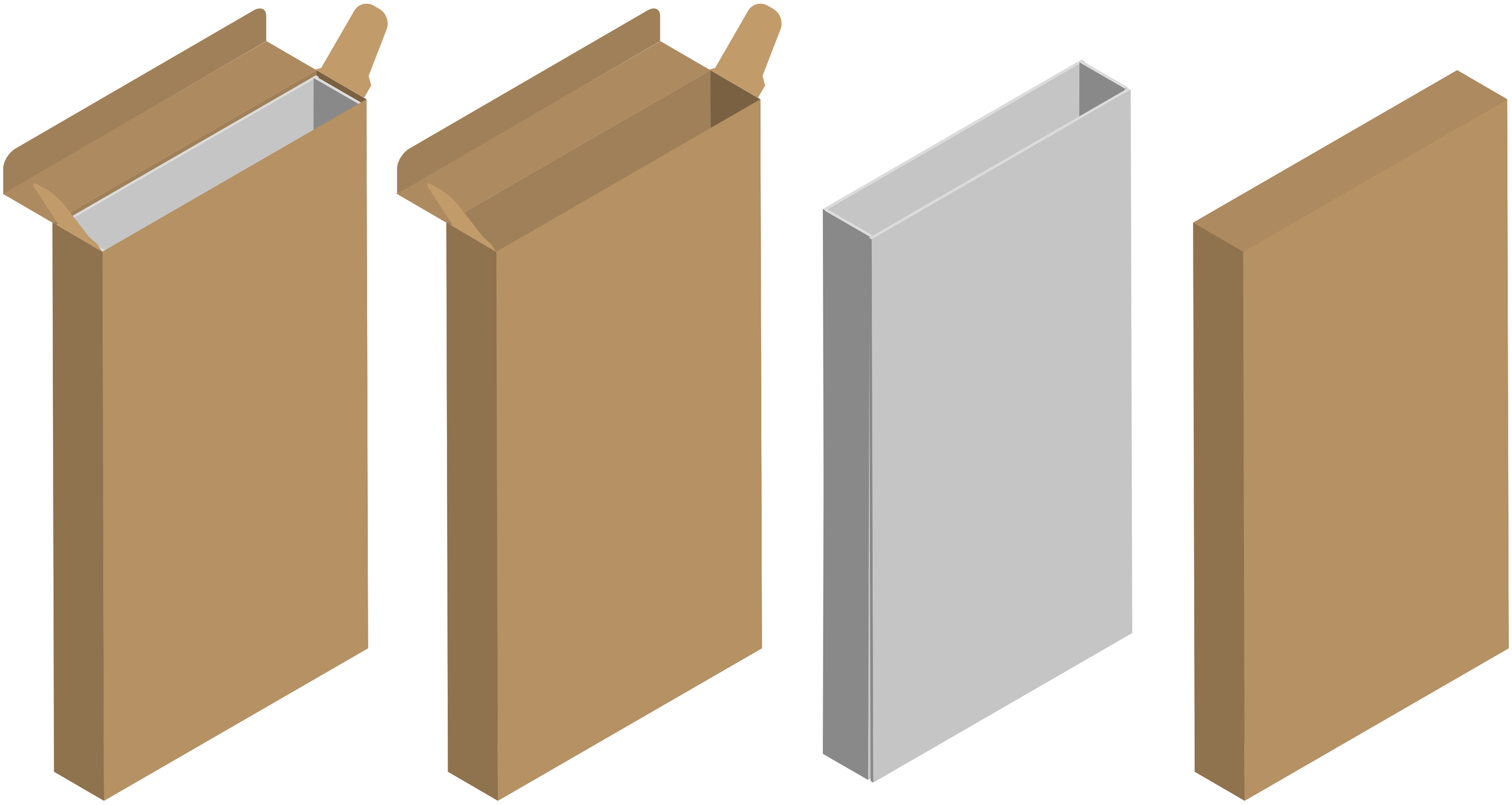

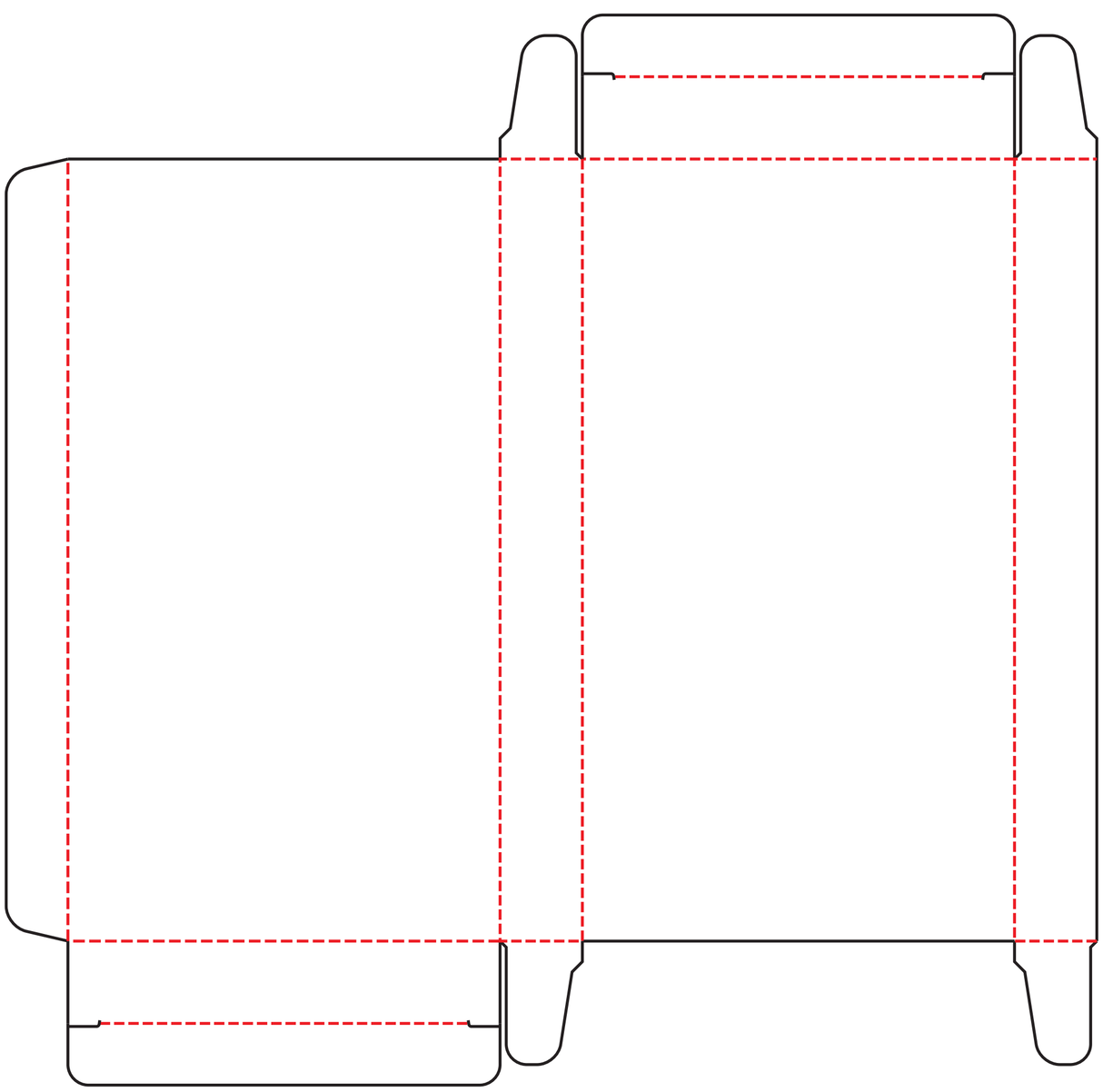

Hard Paper 200-350 gsm

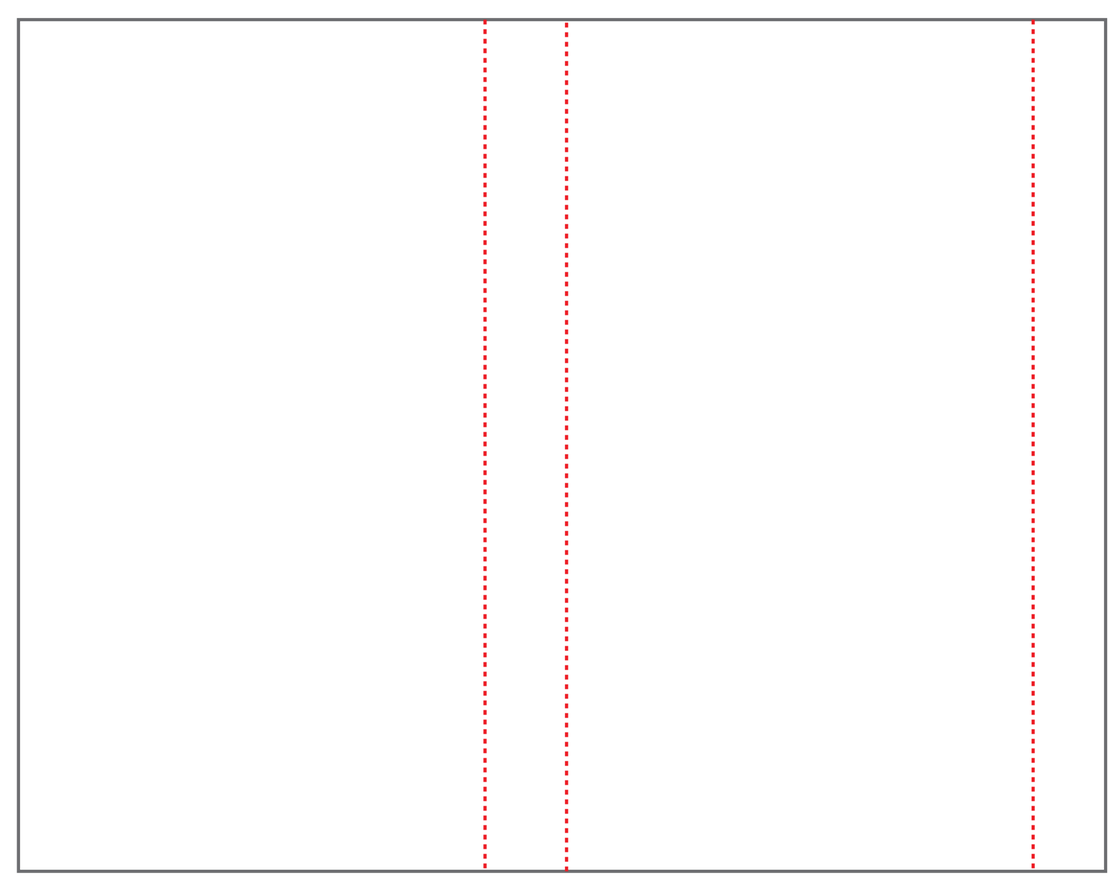

Corrugated Paper E Flute
Product Support

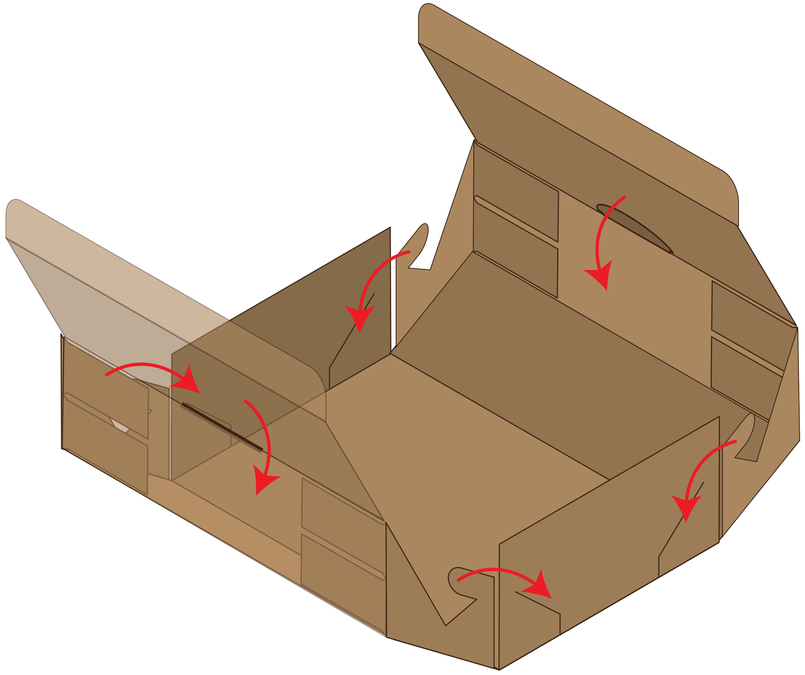

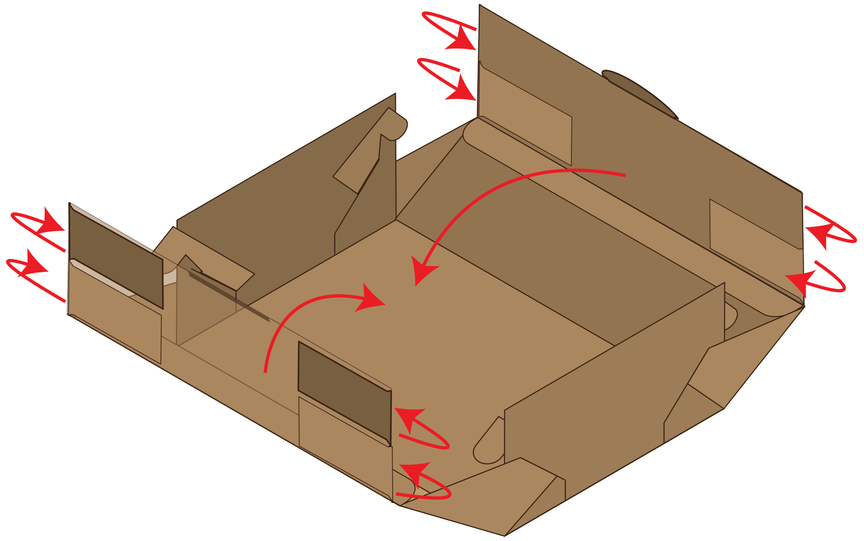

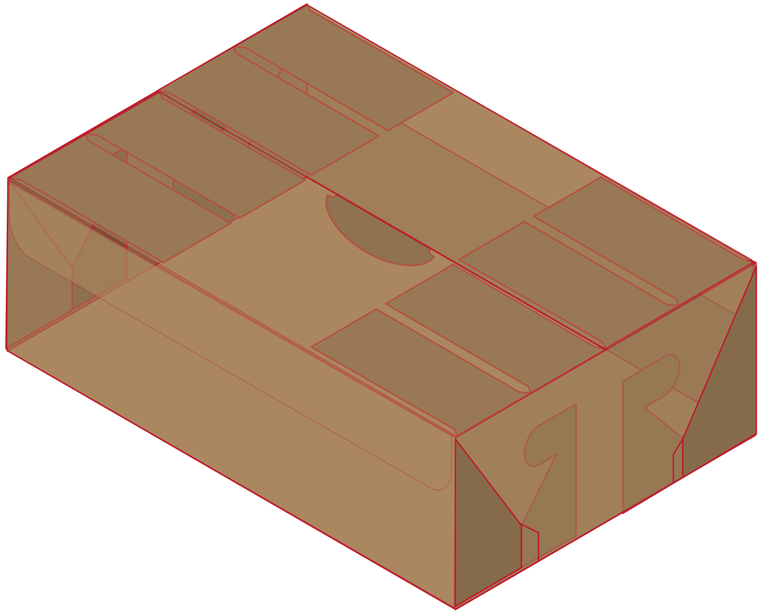

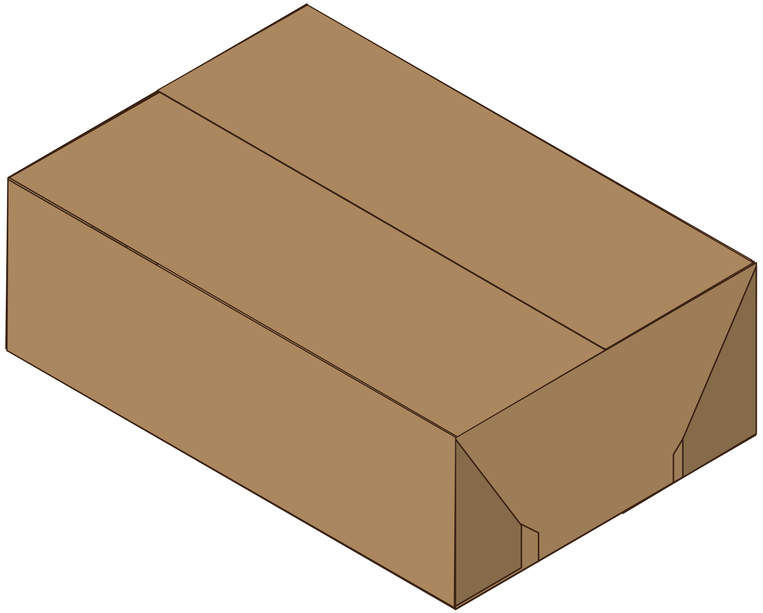

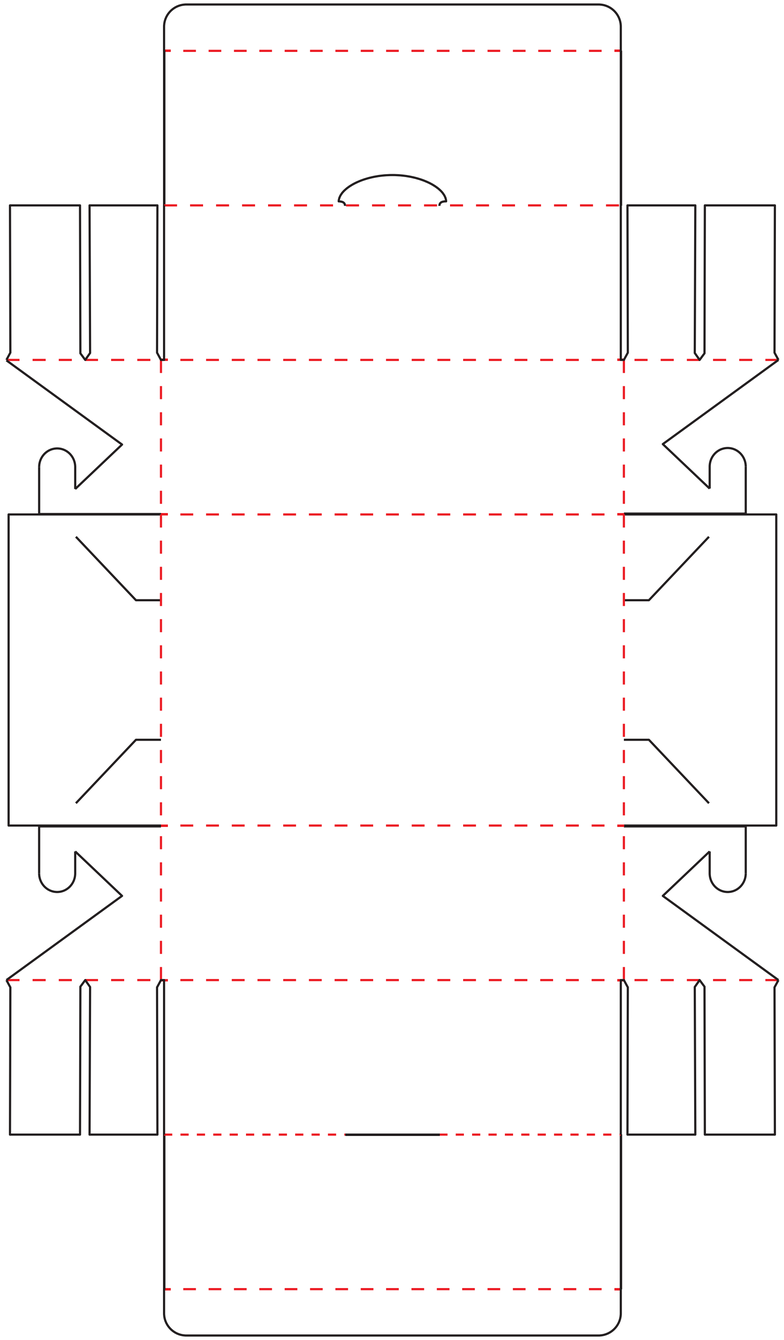

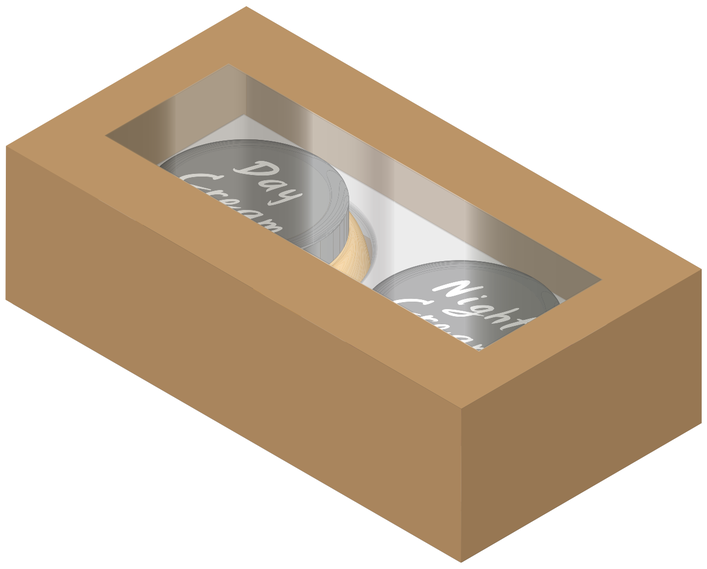

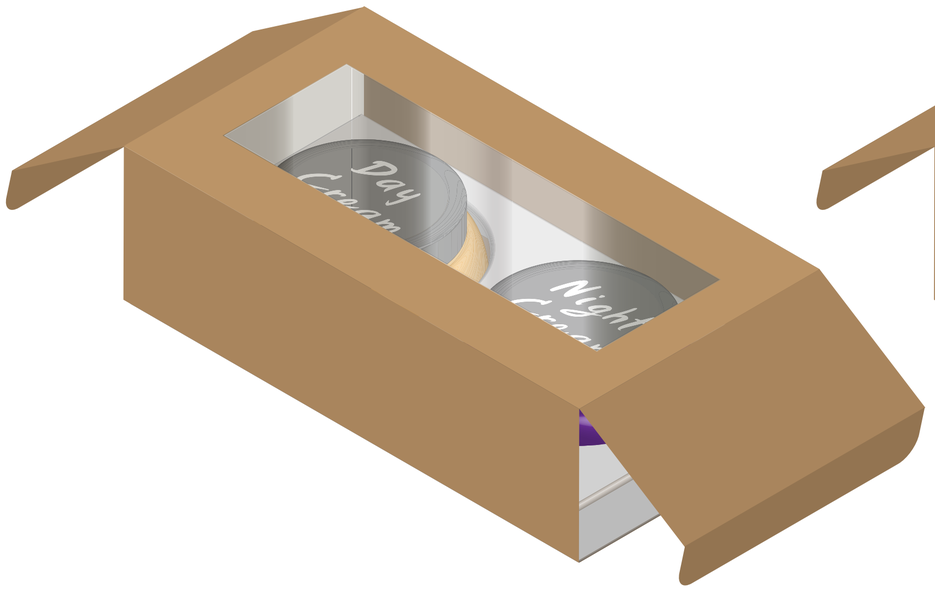

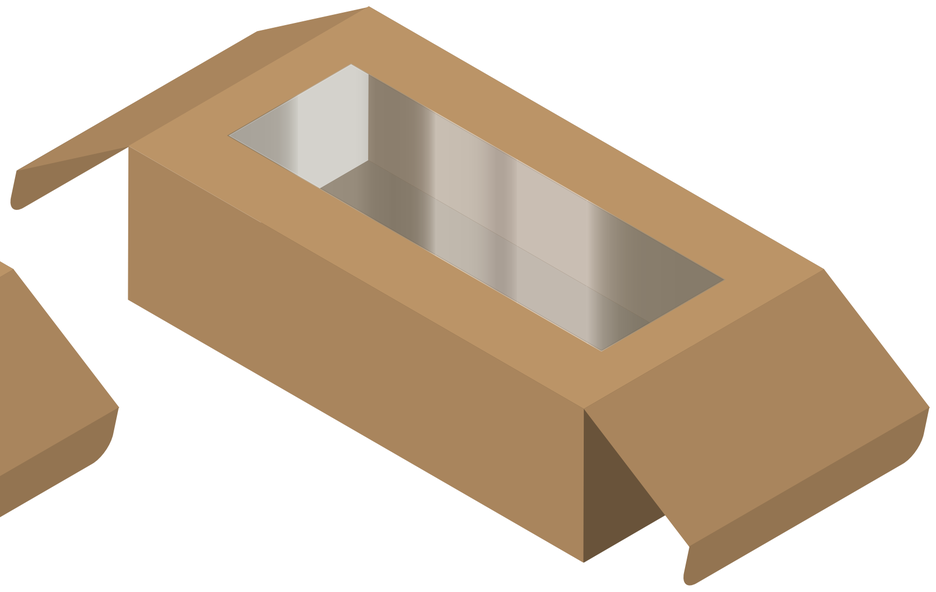

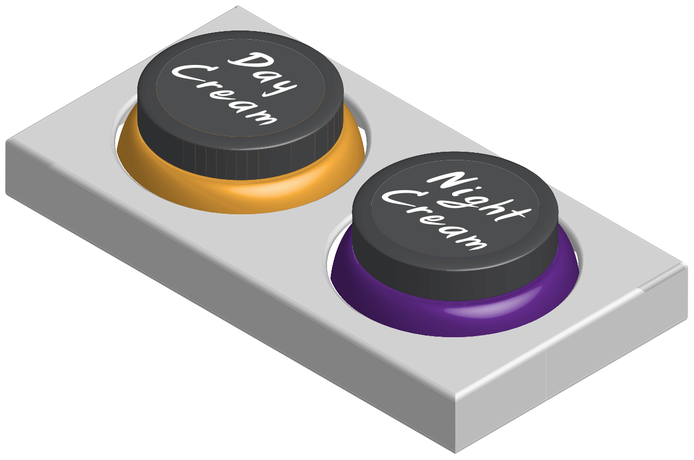

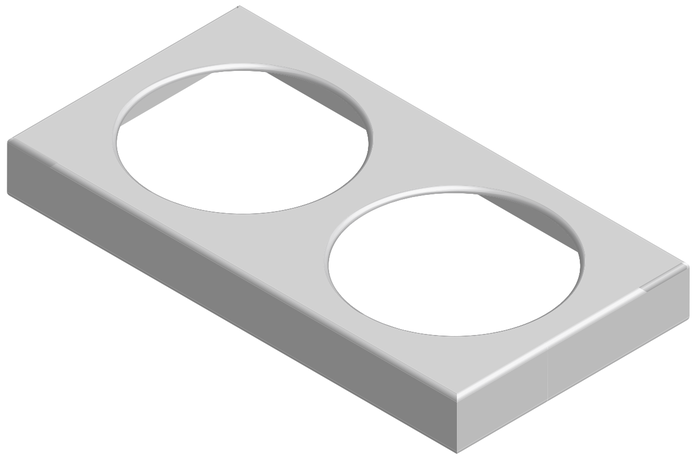

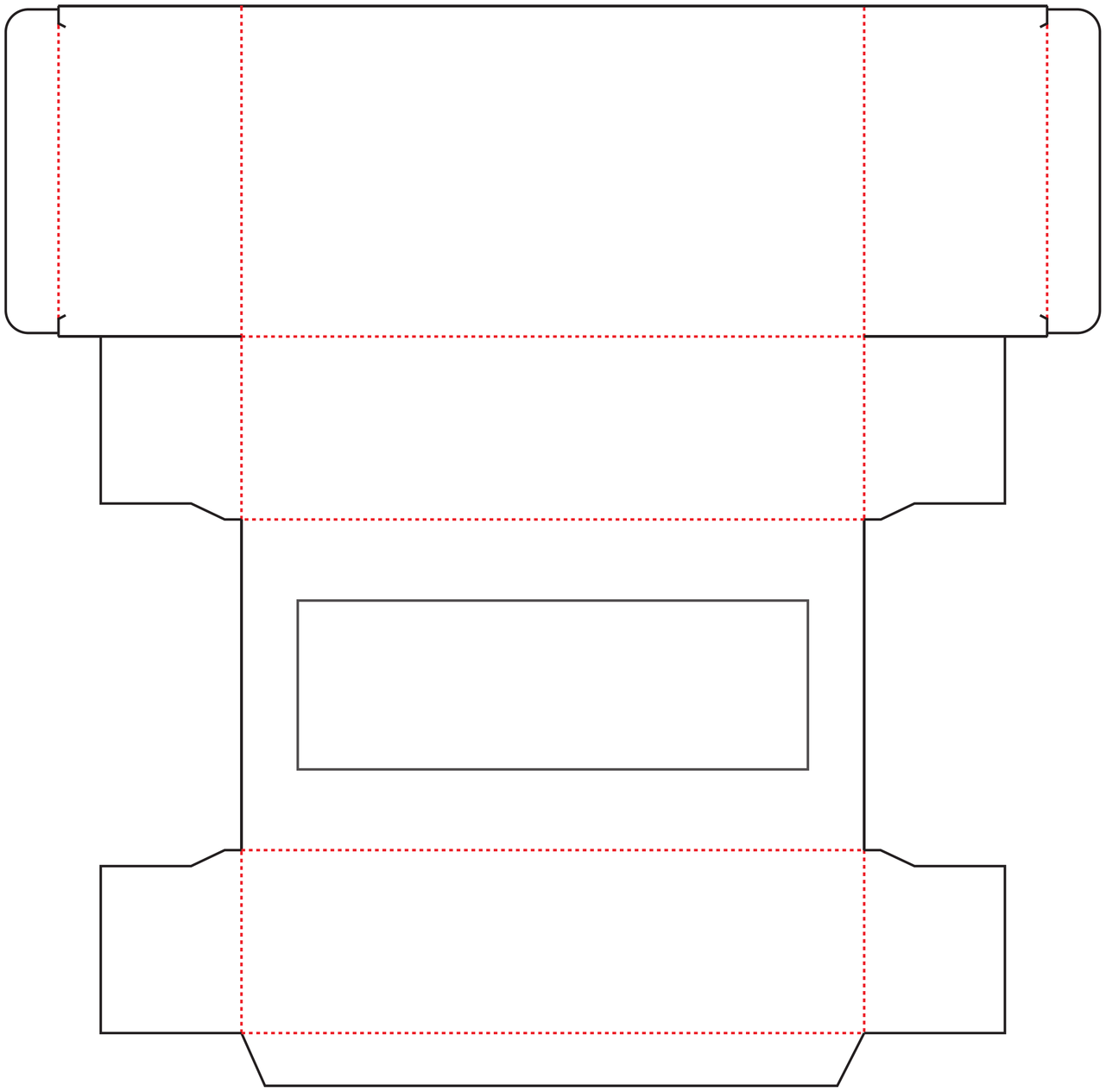

Hard Paper 250-350 gsm

Hard Paper 250-350 gsm

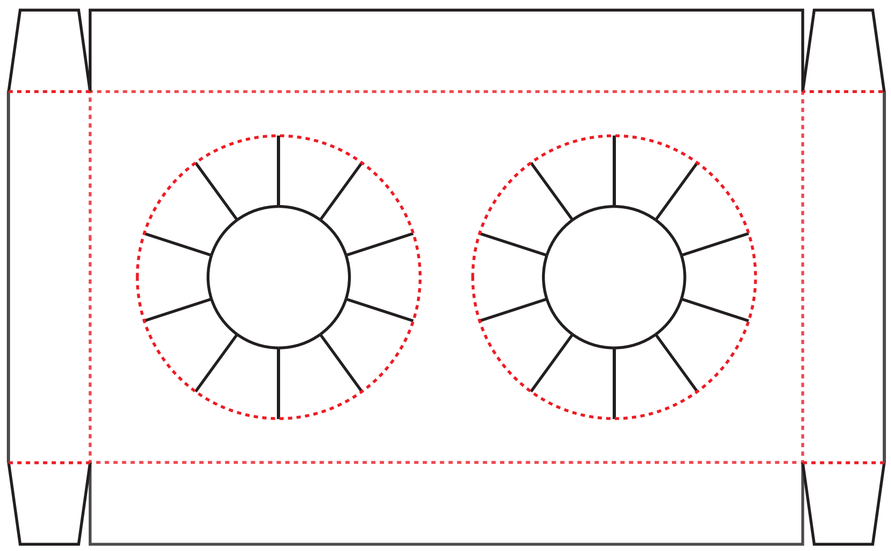

Hard Paper 250-350 gsm

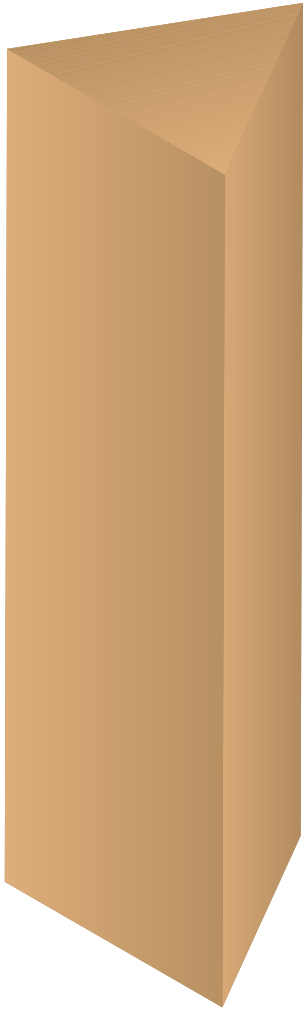

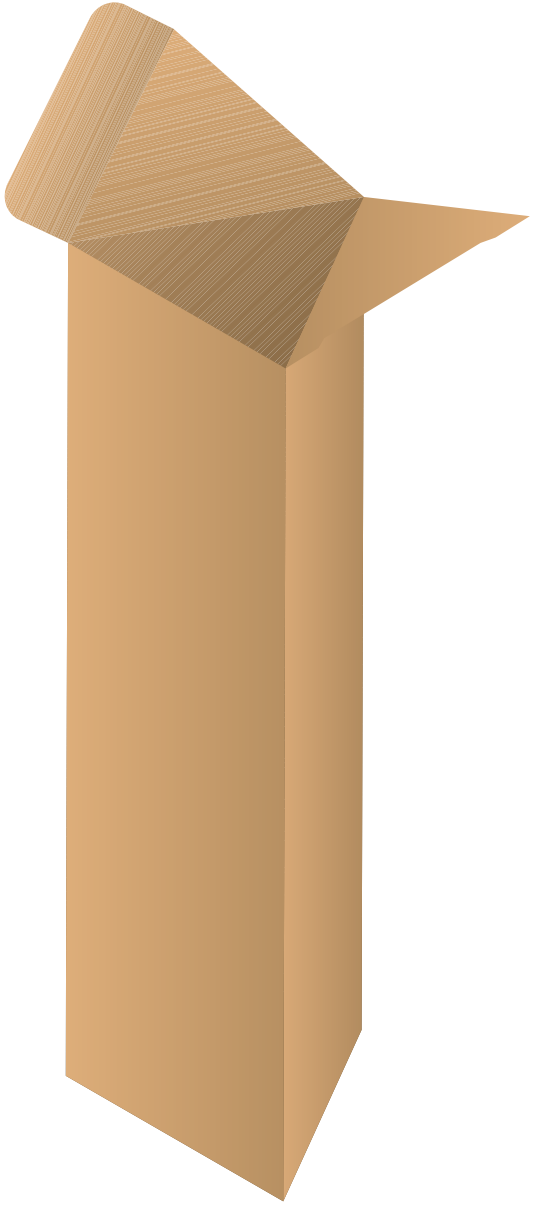

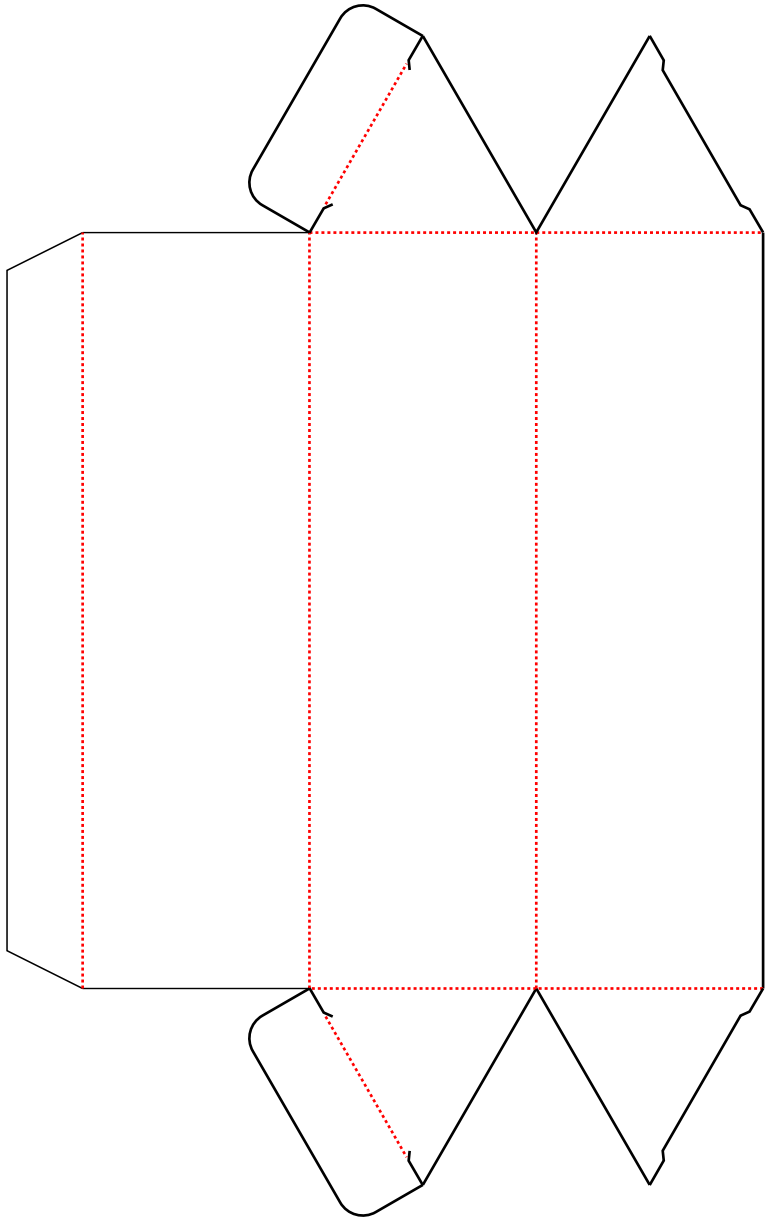

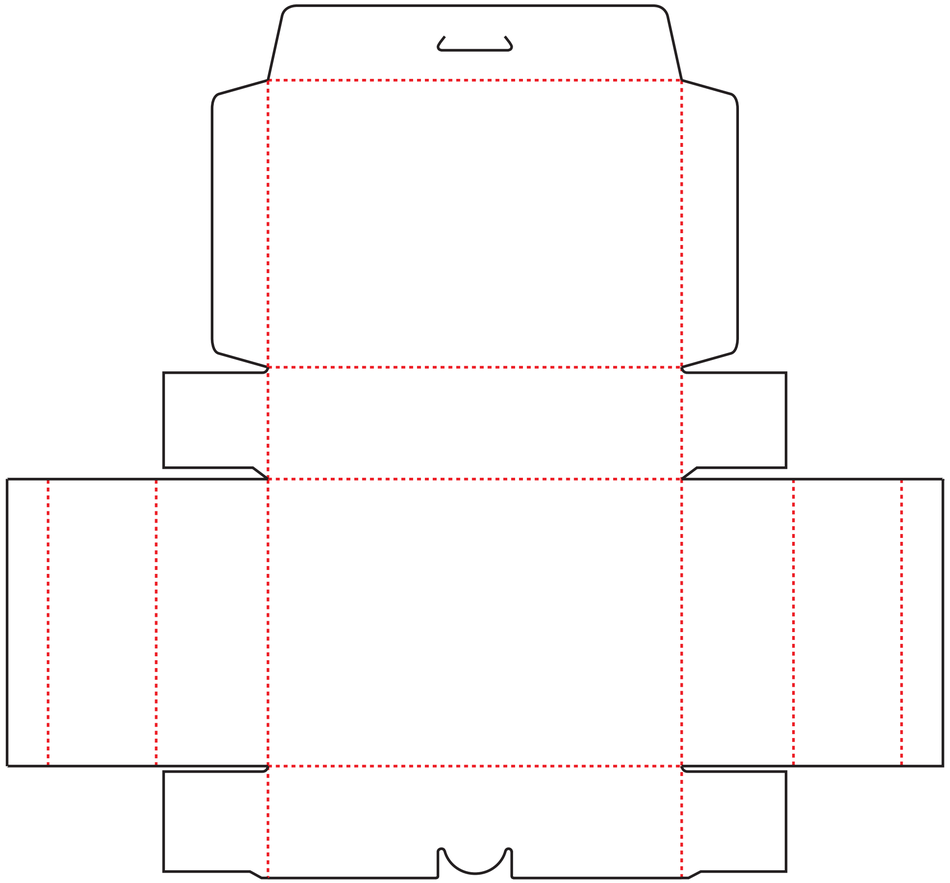

Hard Board Paper 300-350 gsm

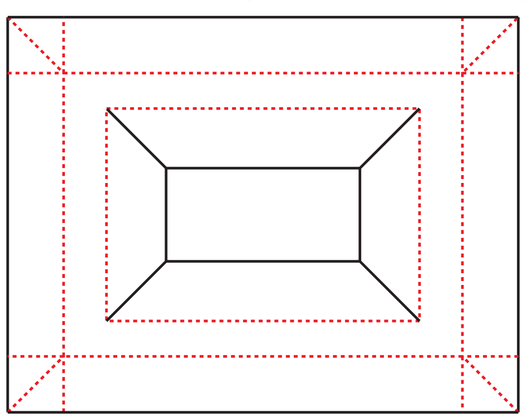

Hard Board Paper 250-350 gsm

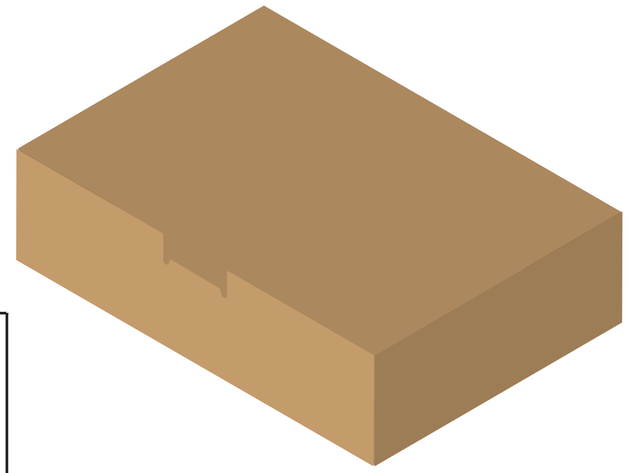

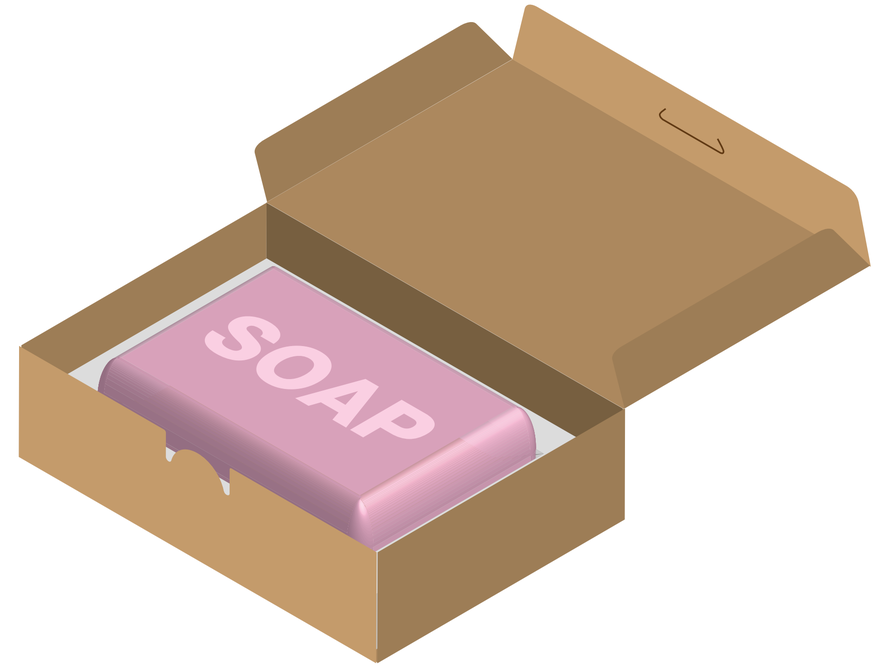

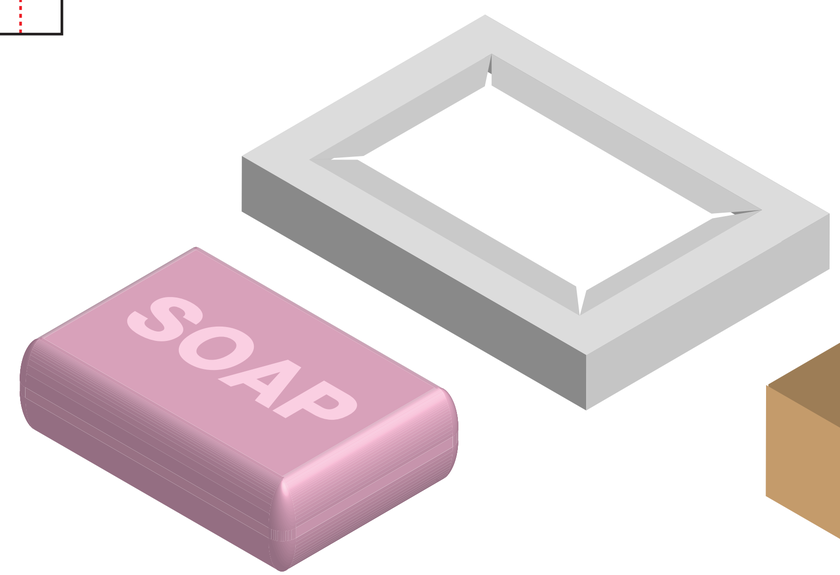

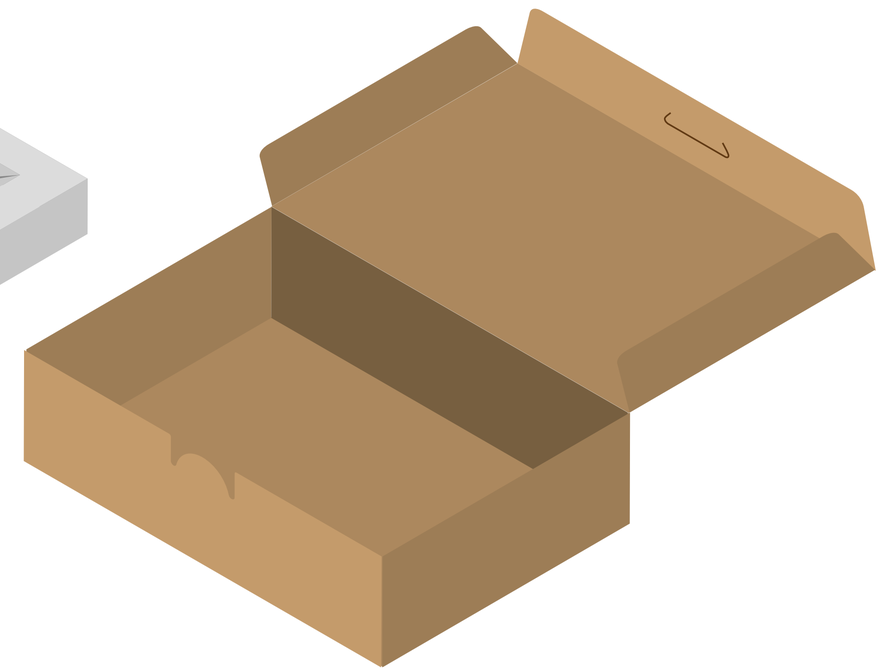

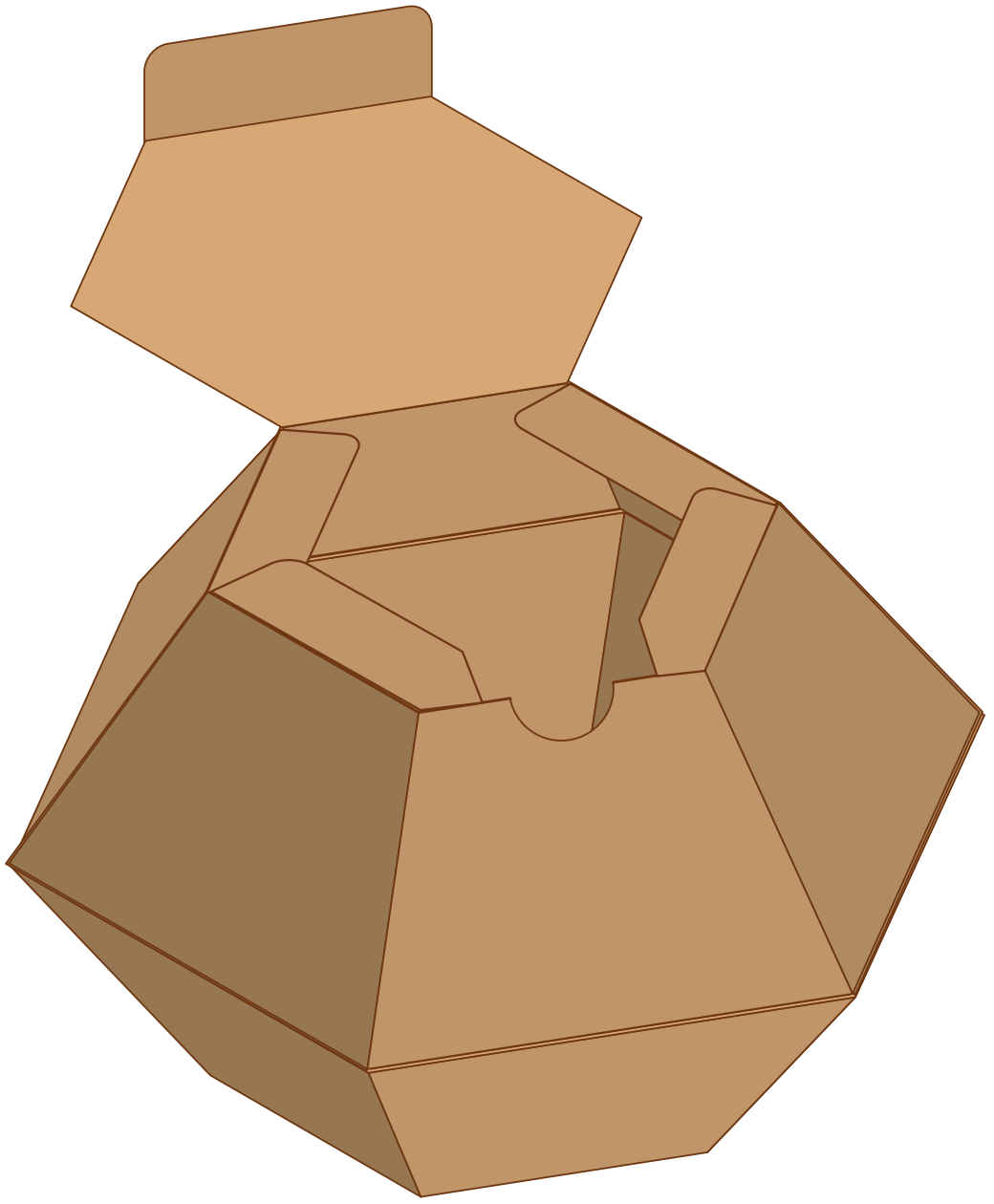

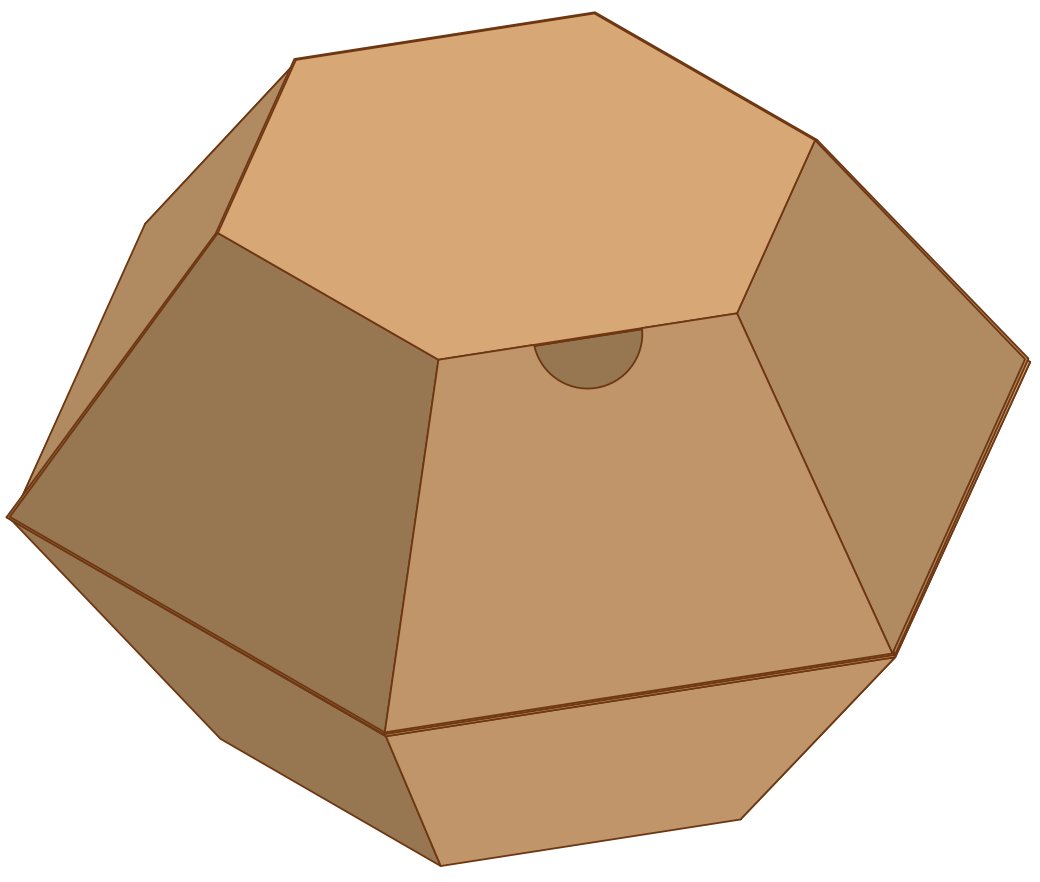

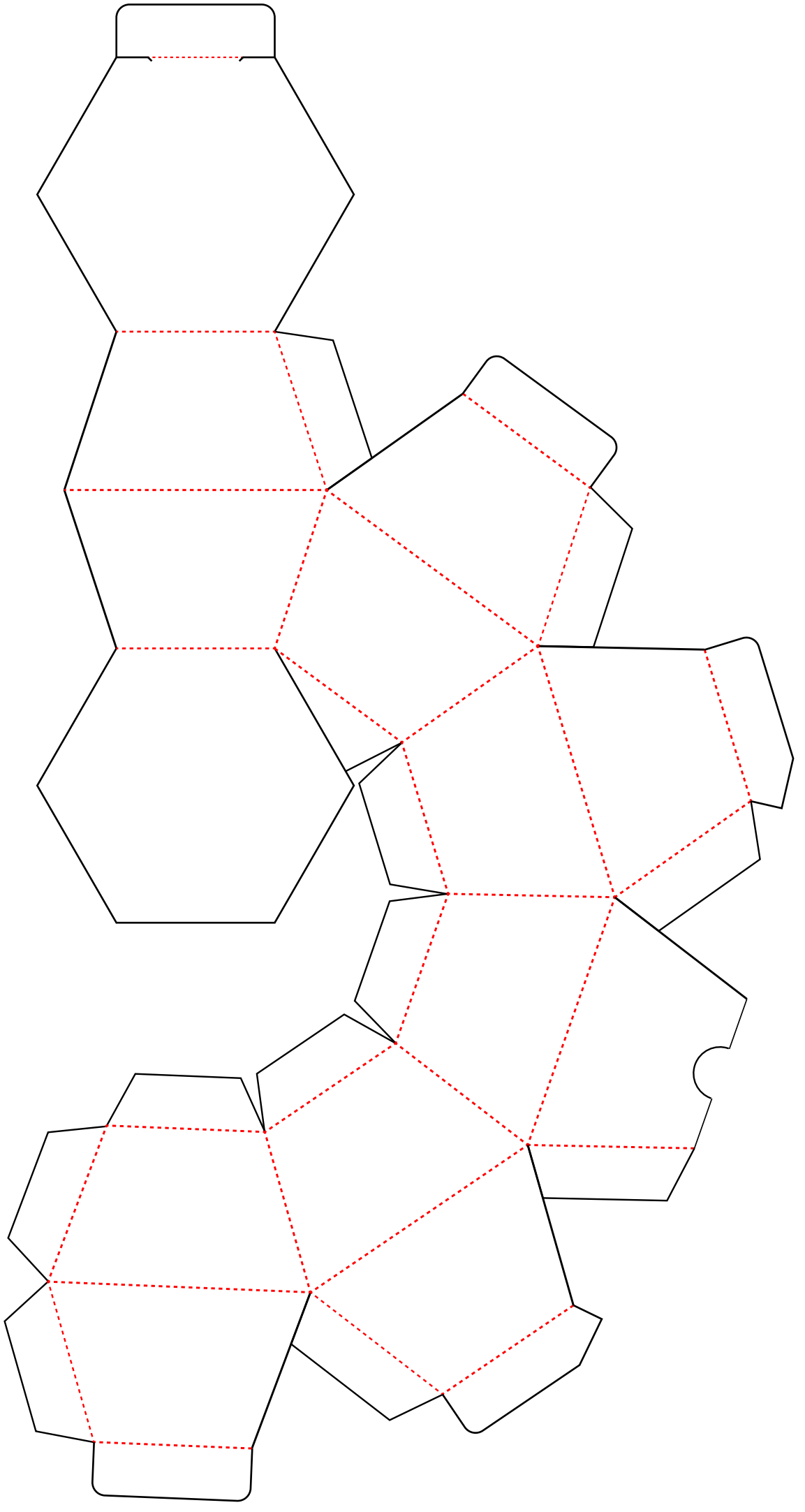

Logo
Brand
Name

Logo
Brand
Name
Logo
Brand
Name

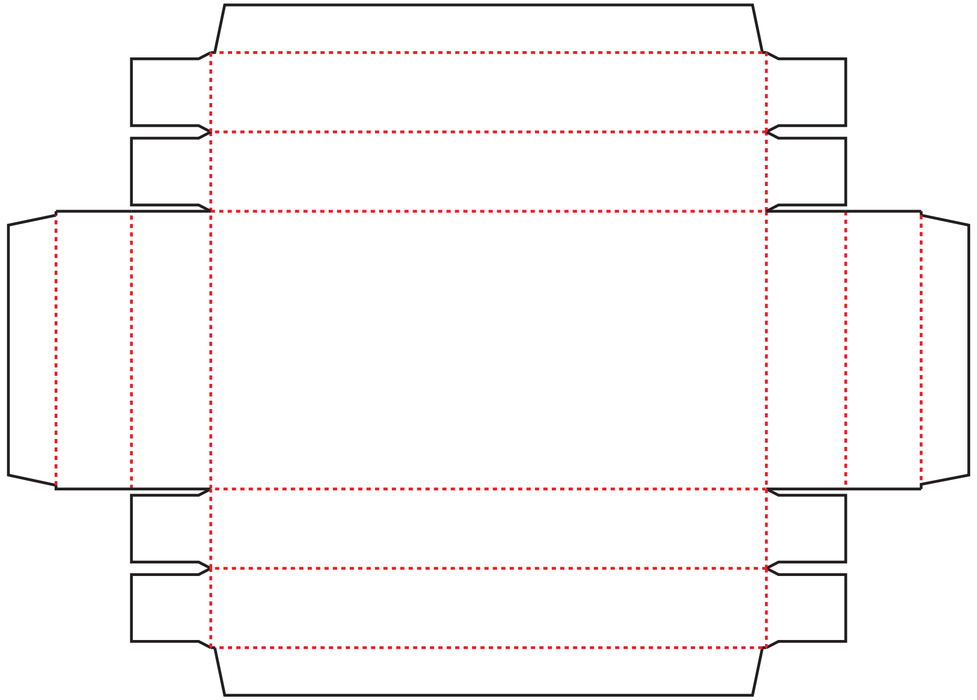

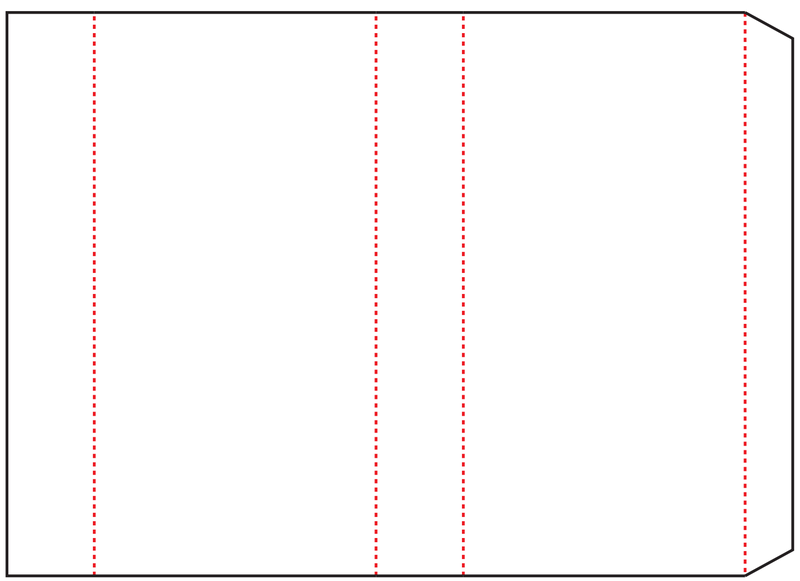

Corrugated Paper : E flute

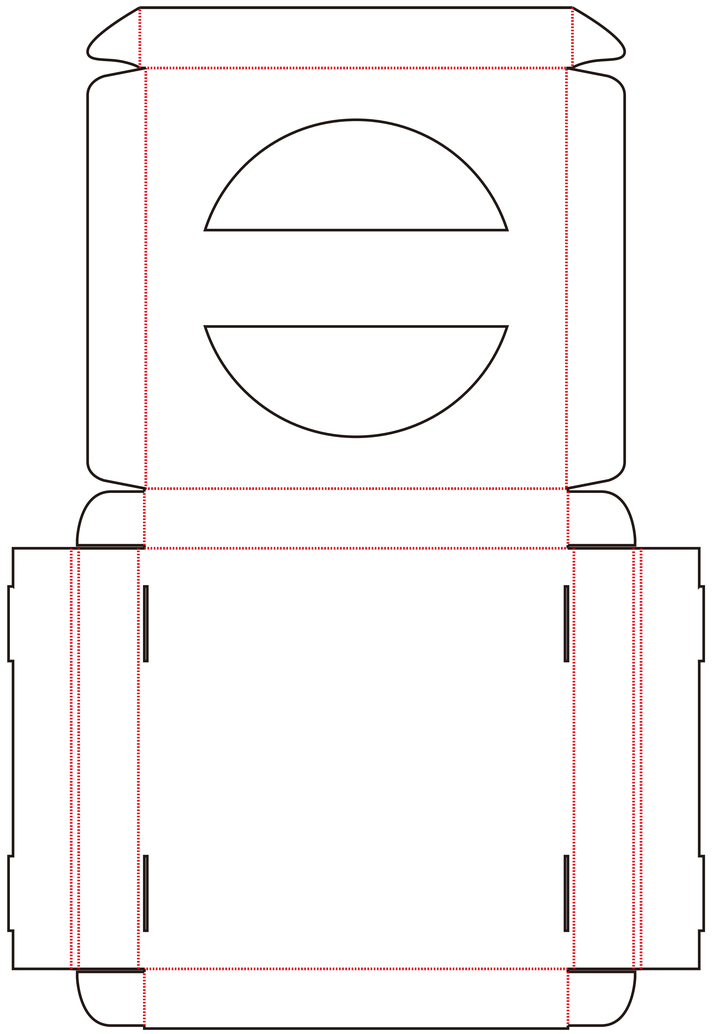

Hard Paper 350 gsm

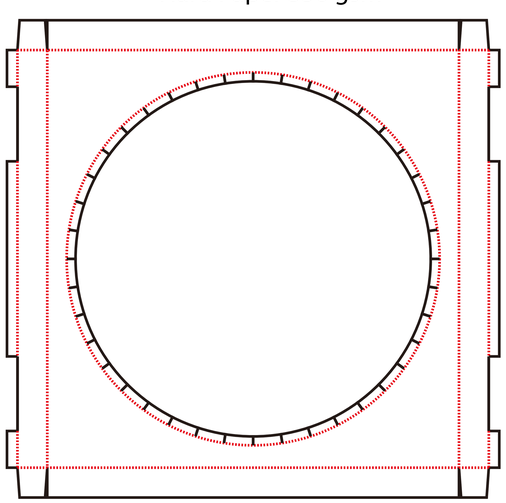

Transparent Plastic Sheet 150 micron

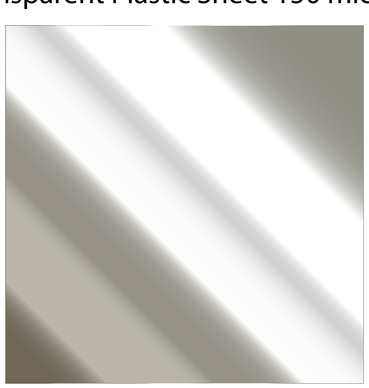

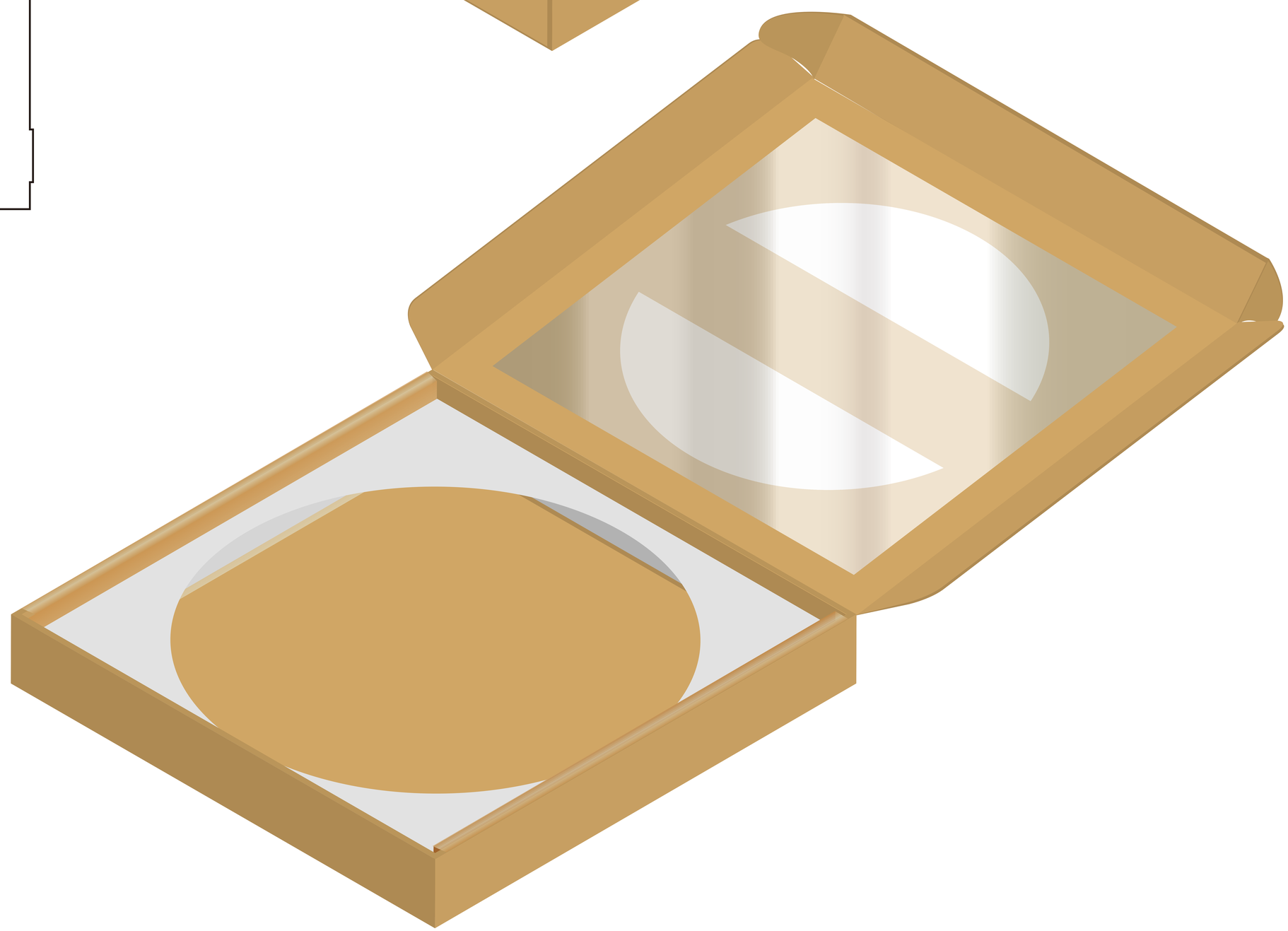

Hard Paper 300-350 gsm

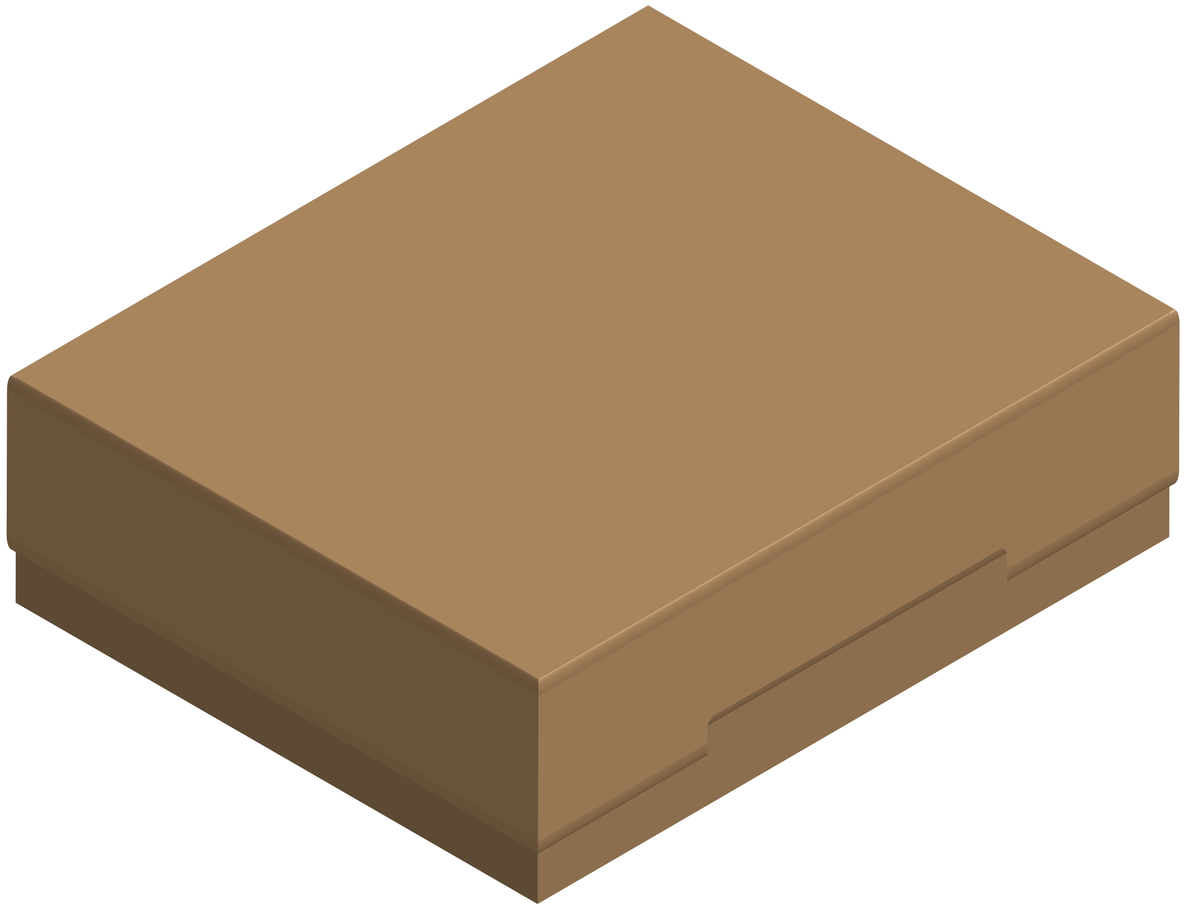

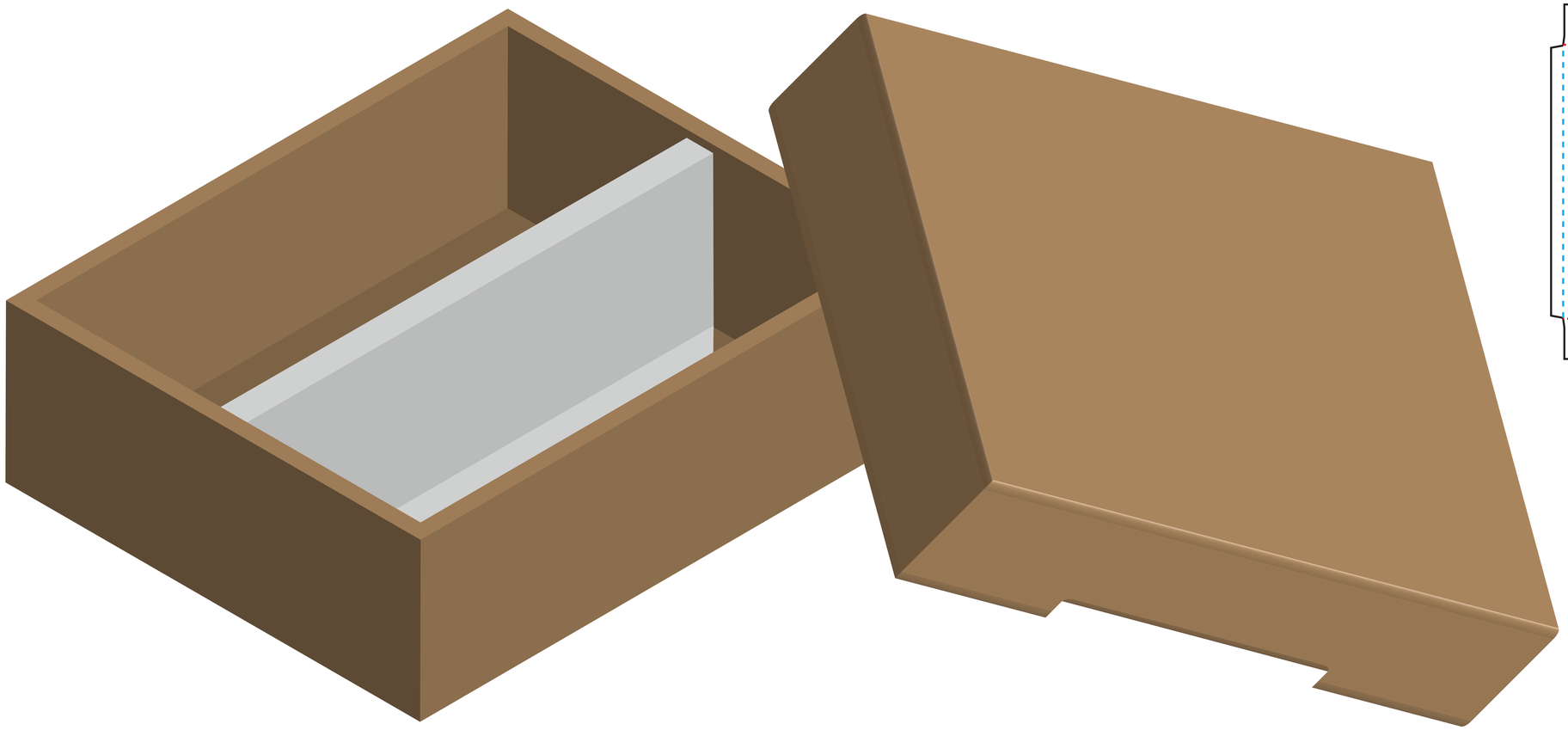

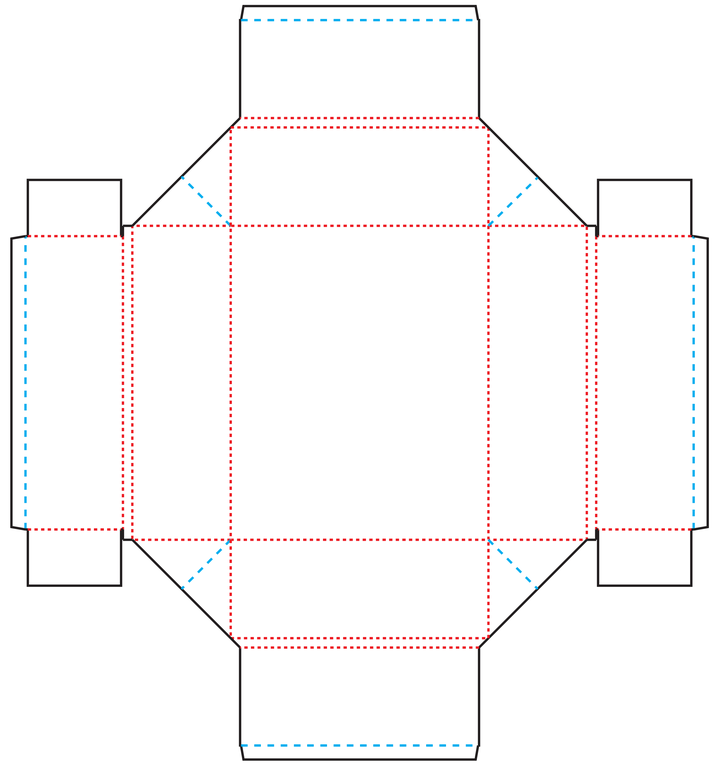

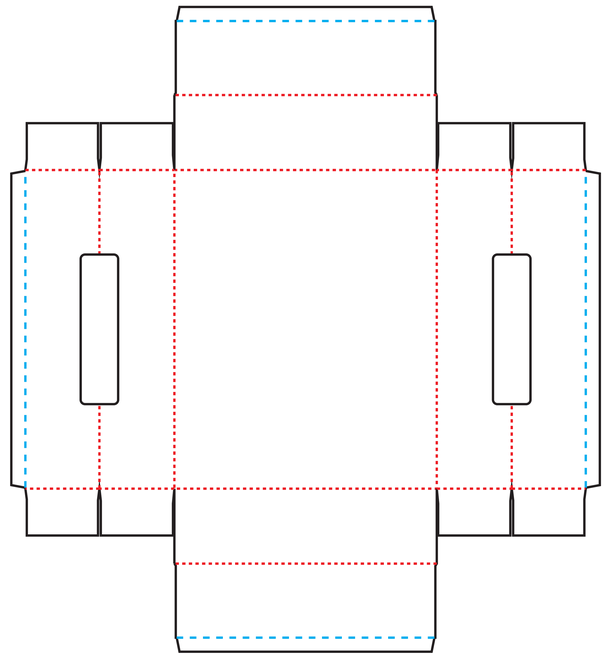

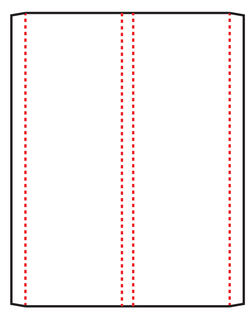

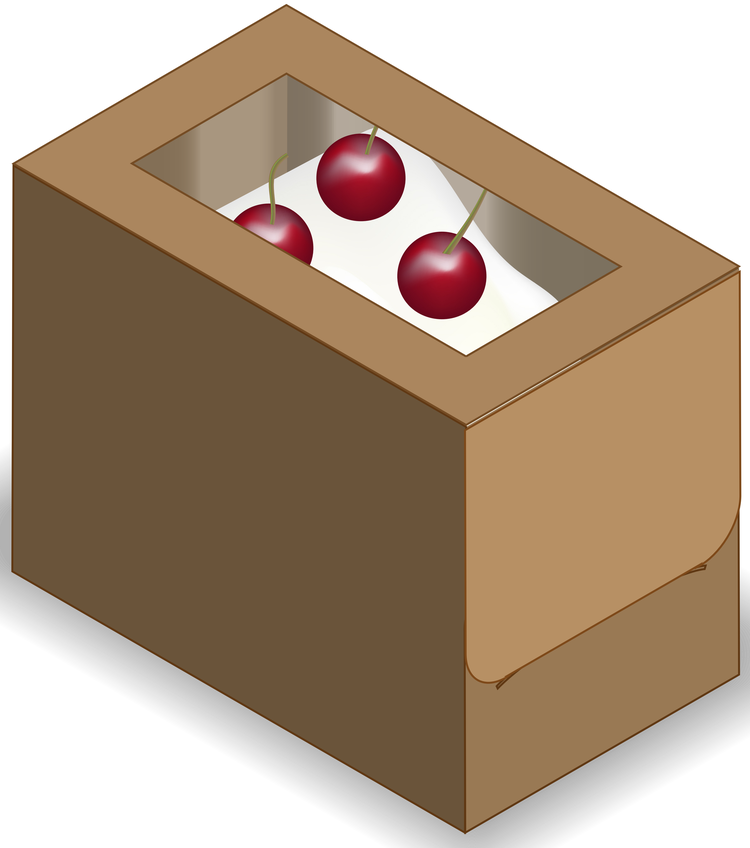

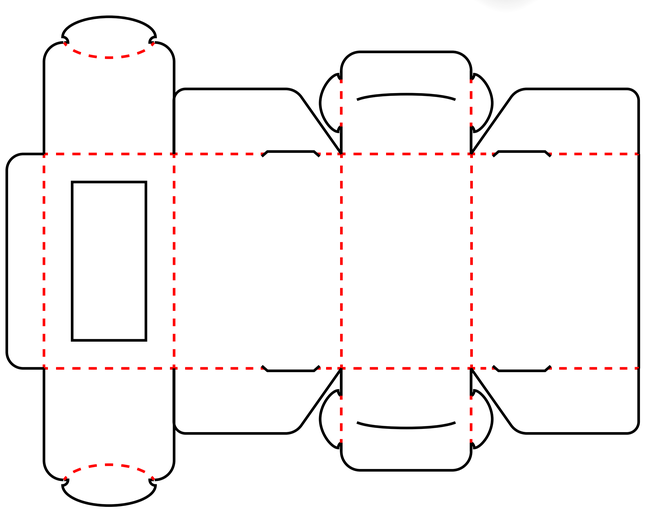

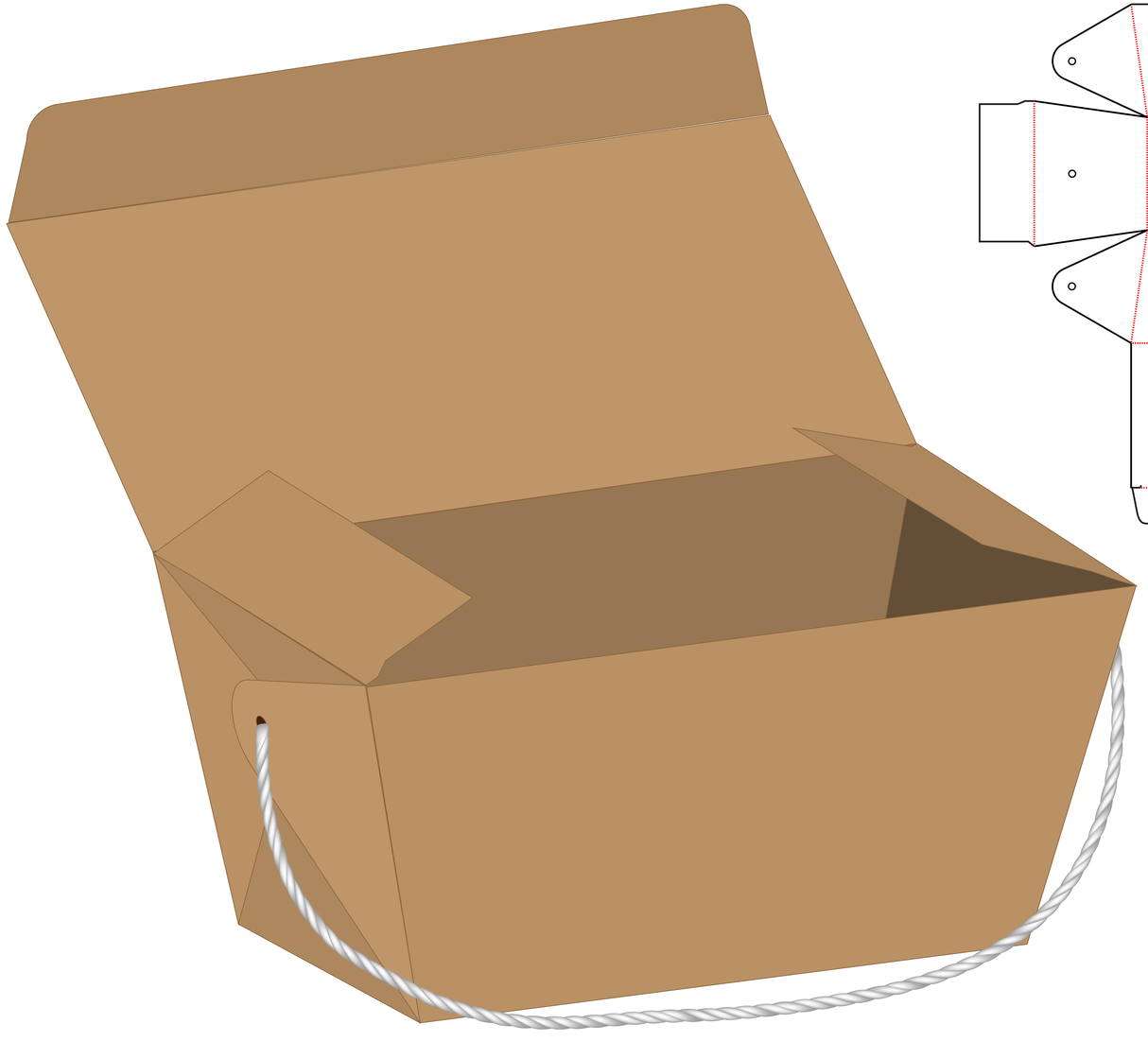

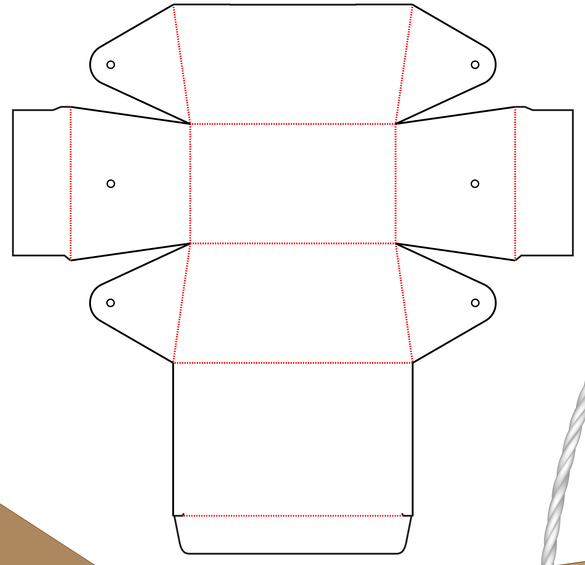

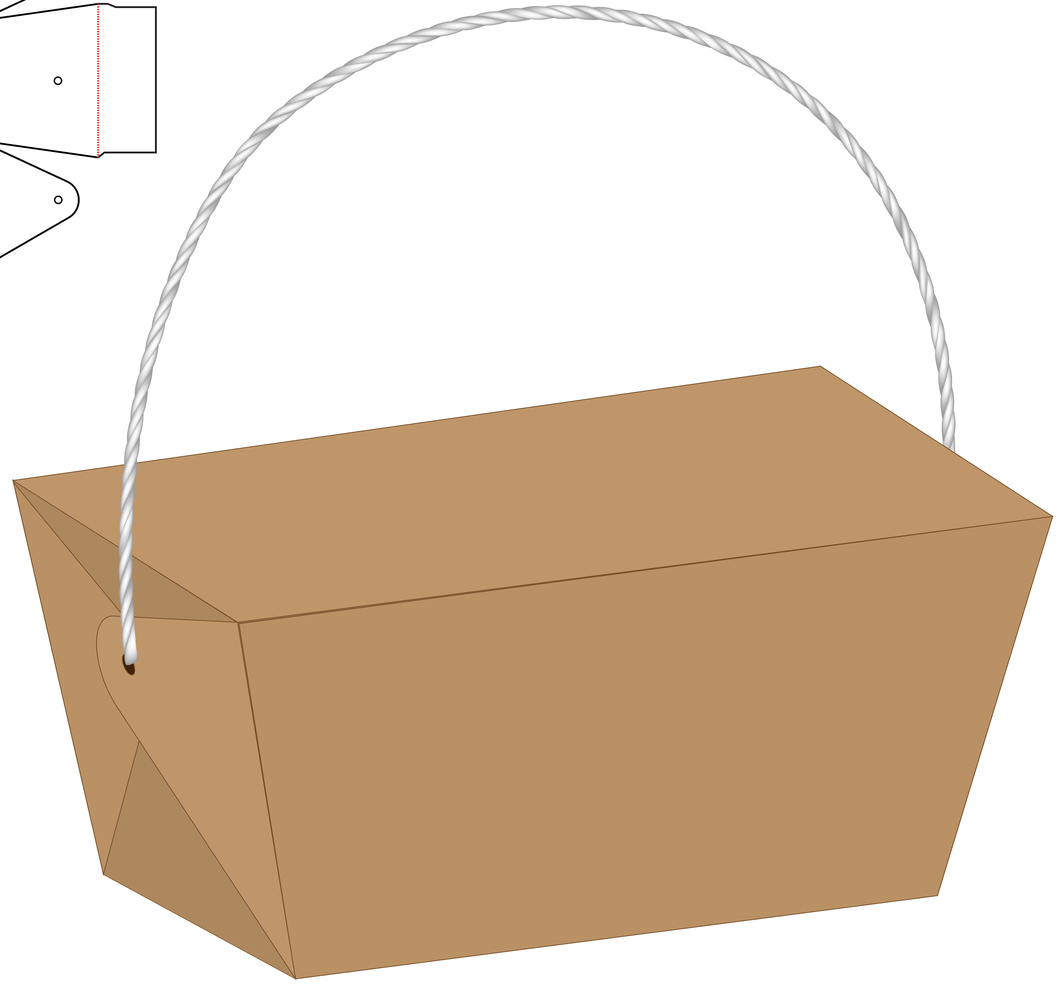

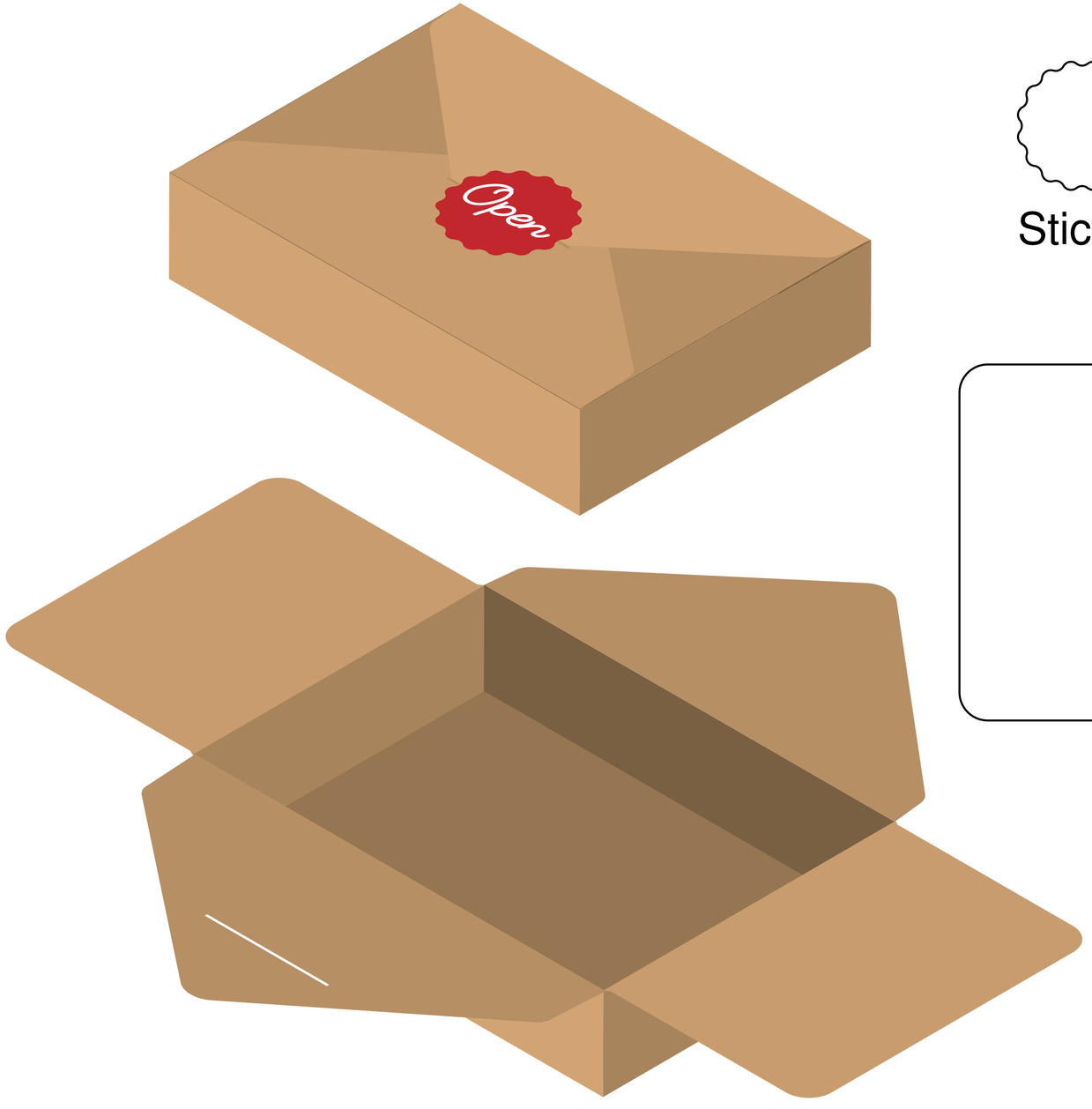
Open

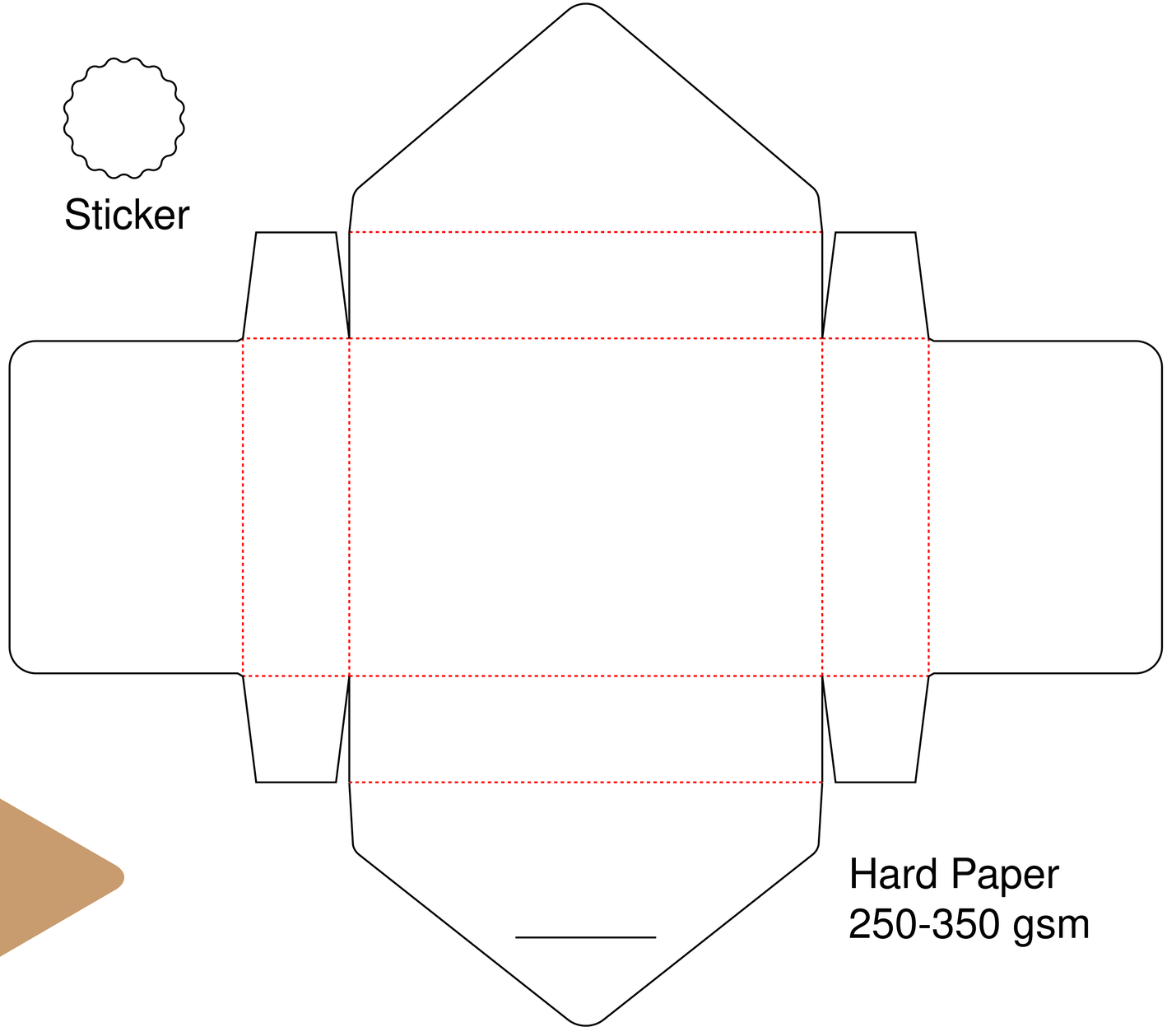
Sticker
Hard Paper
250-350 gsm

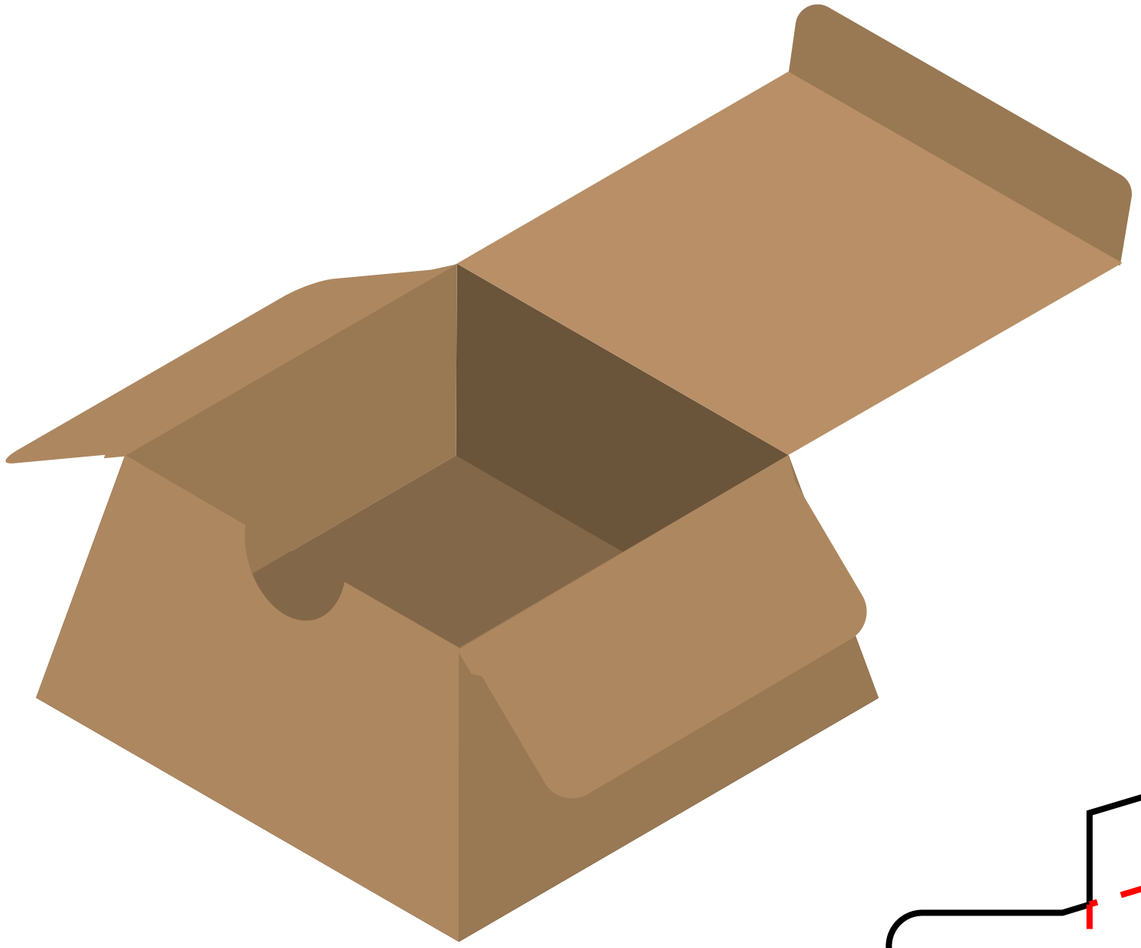

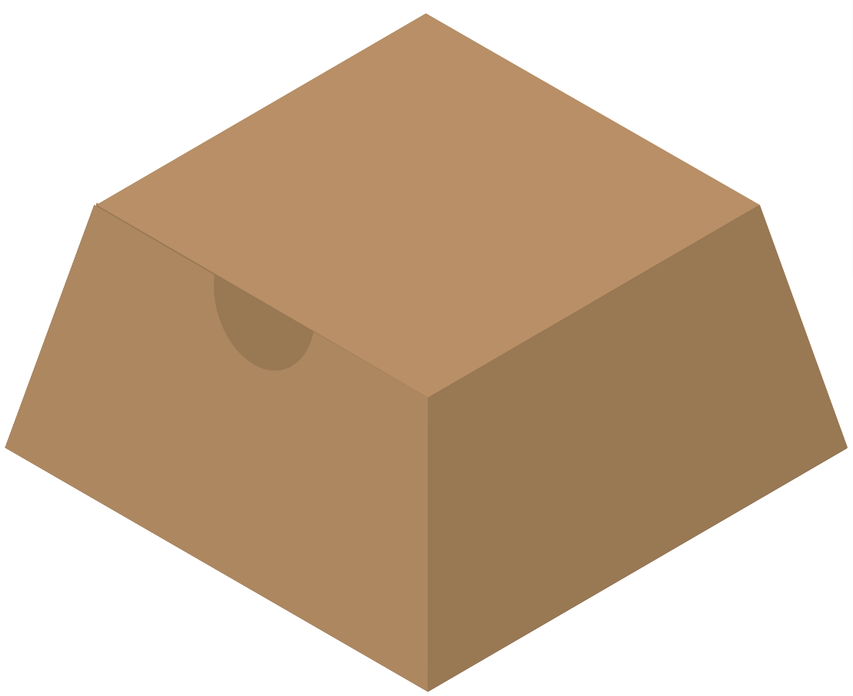

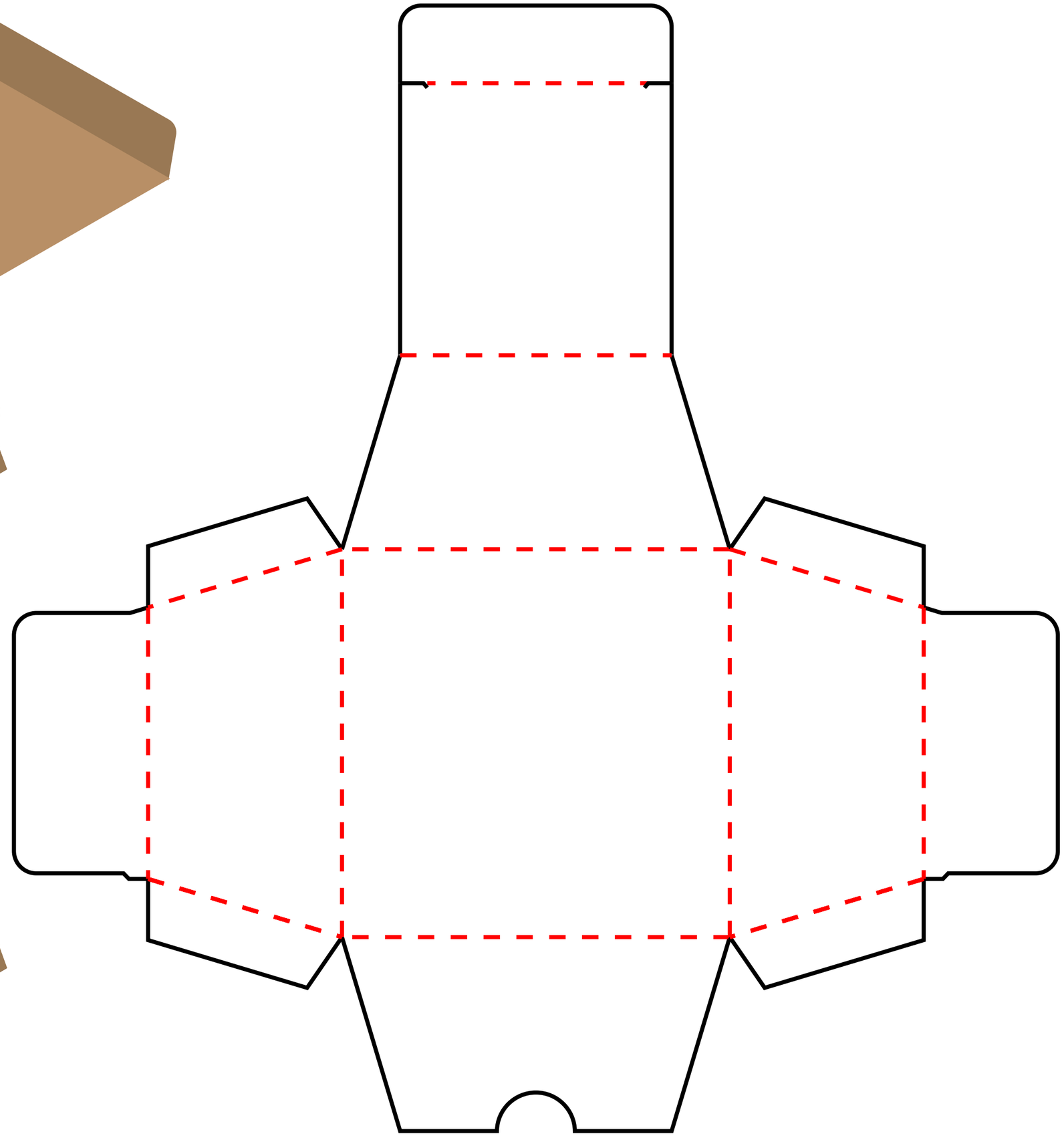

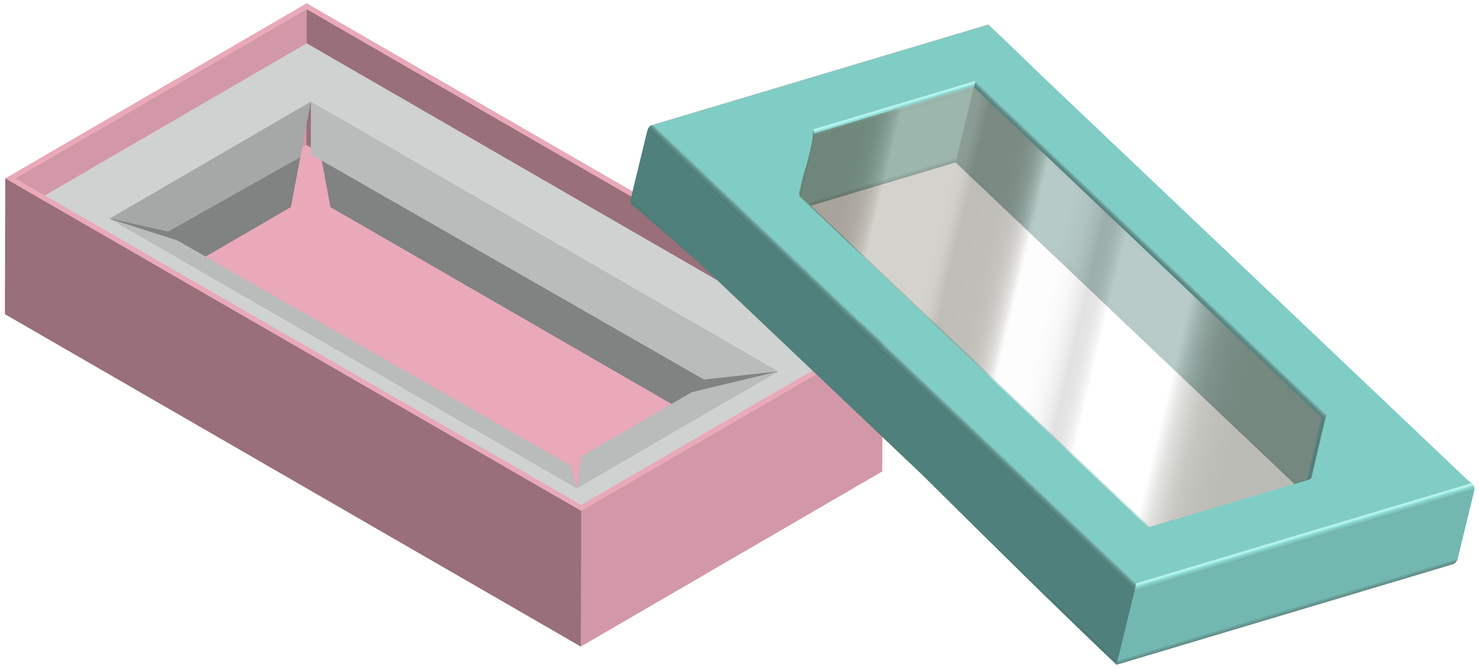

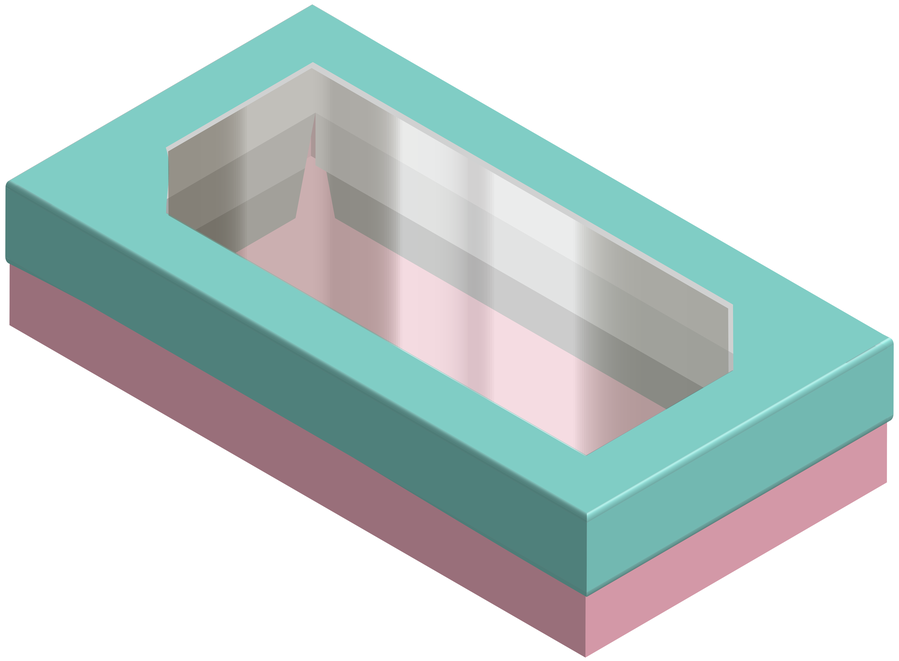

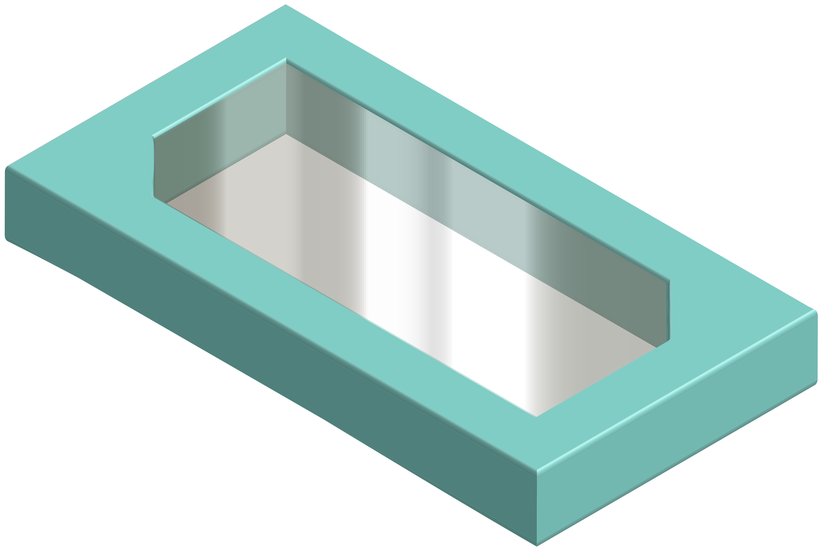

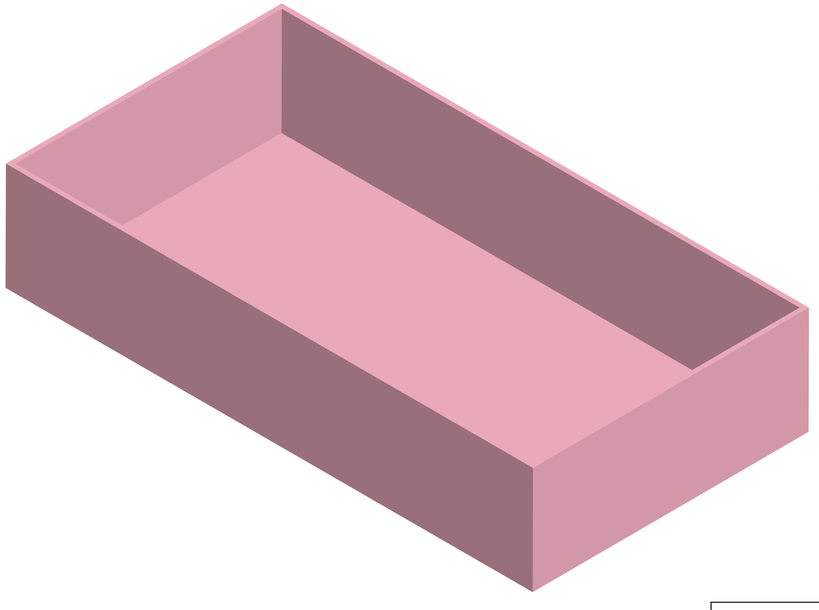

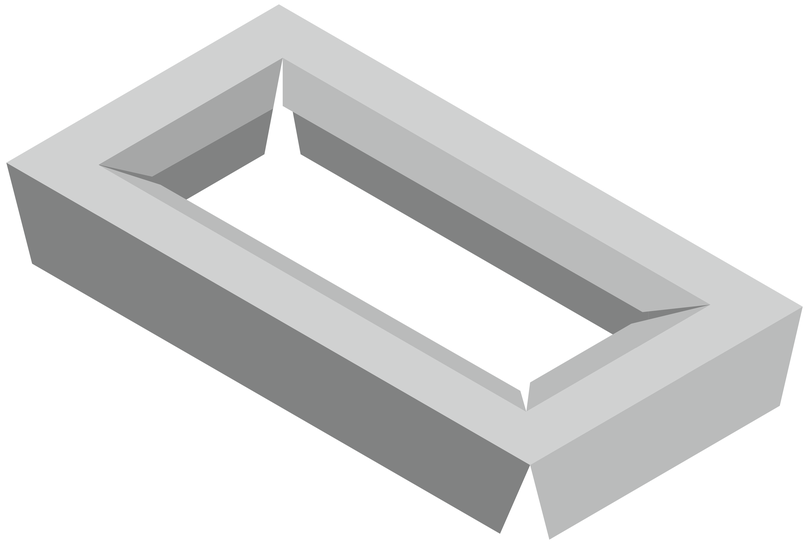

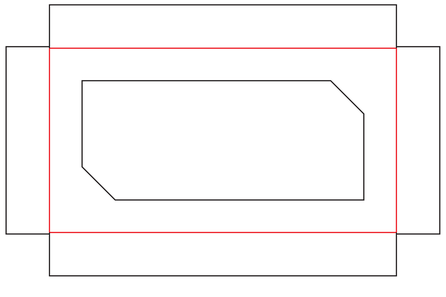

Hard board Paper
Thick 0.14 cm
Top Box

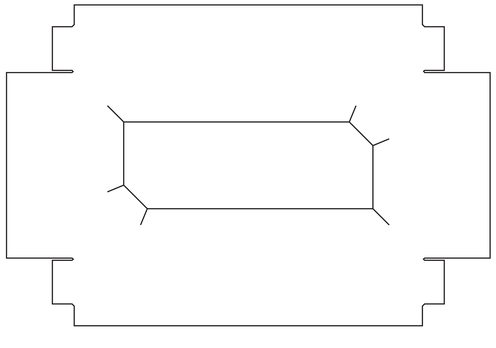

Wrapping Paper
Top Box

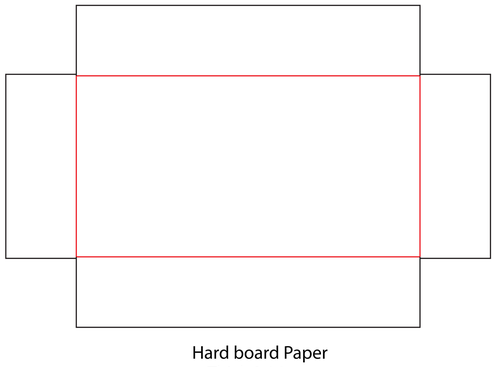

Hard board Paper
Thick 0.14 cm
Bottom Box

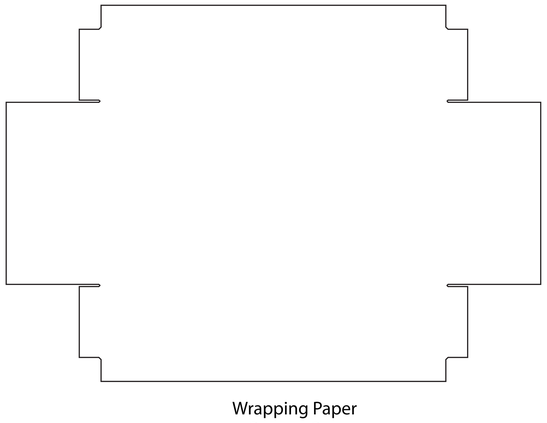

Wrapping Paper
Bottom Box

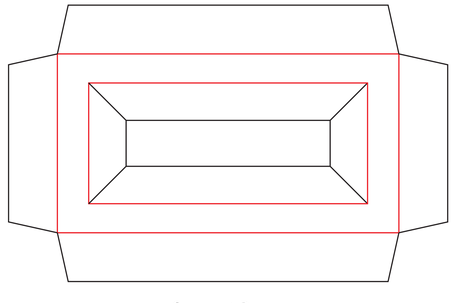

Support Paper
300-350 gsm
Bottom Box

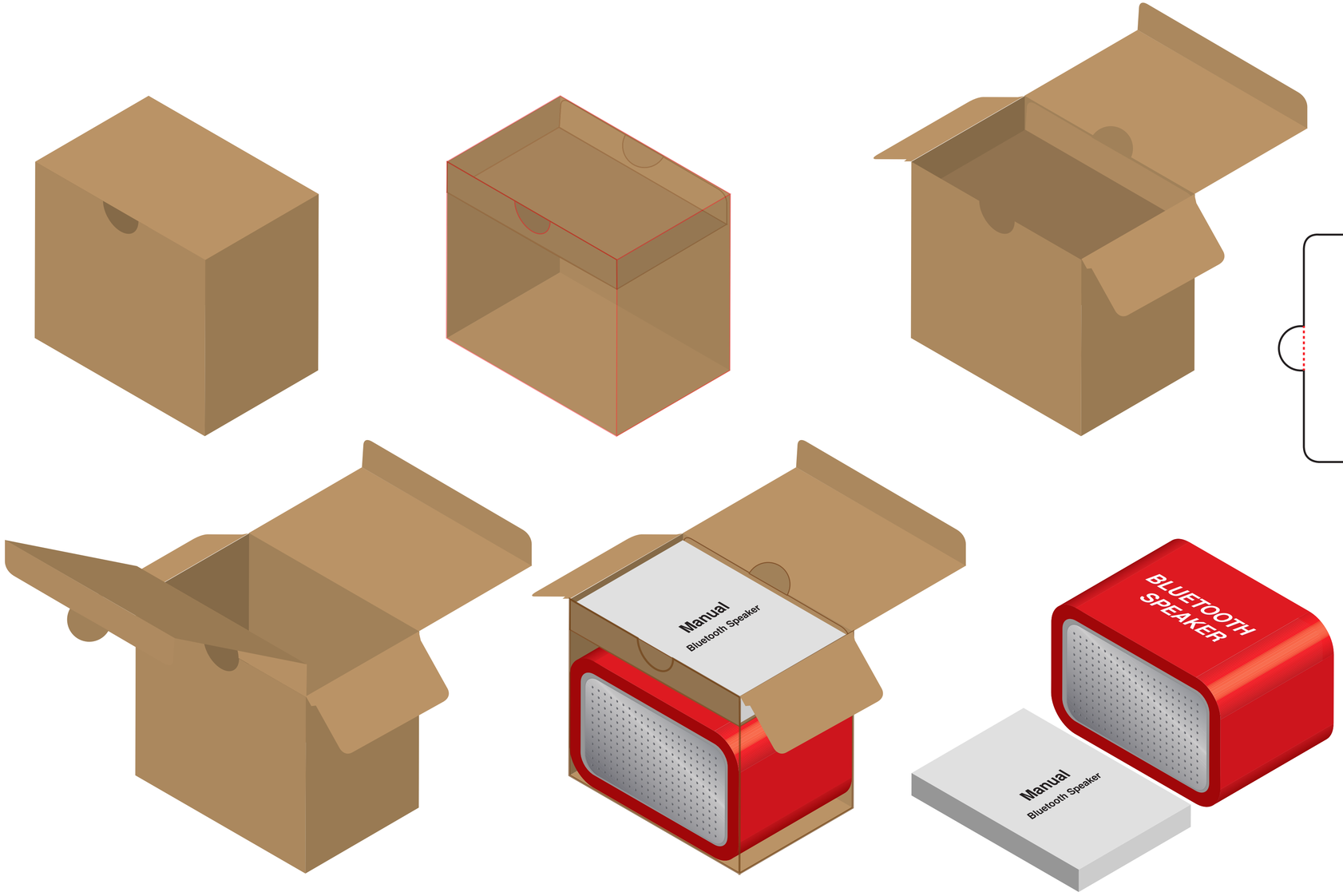

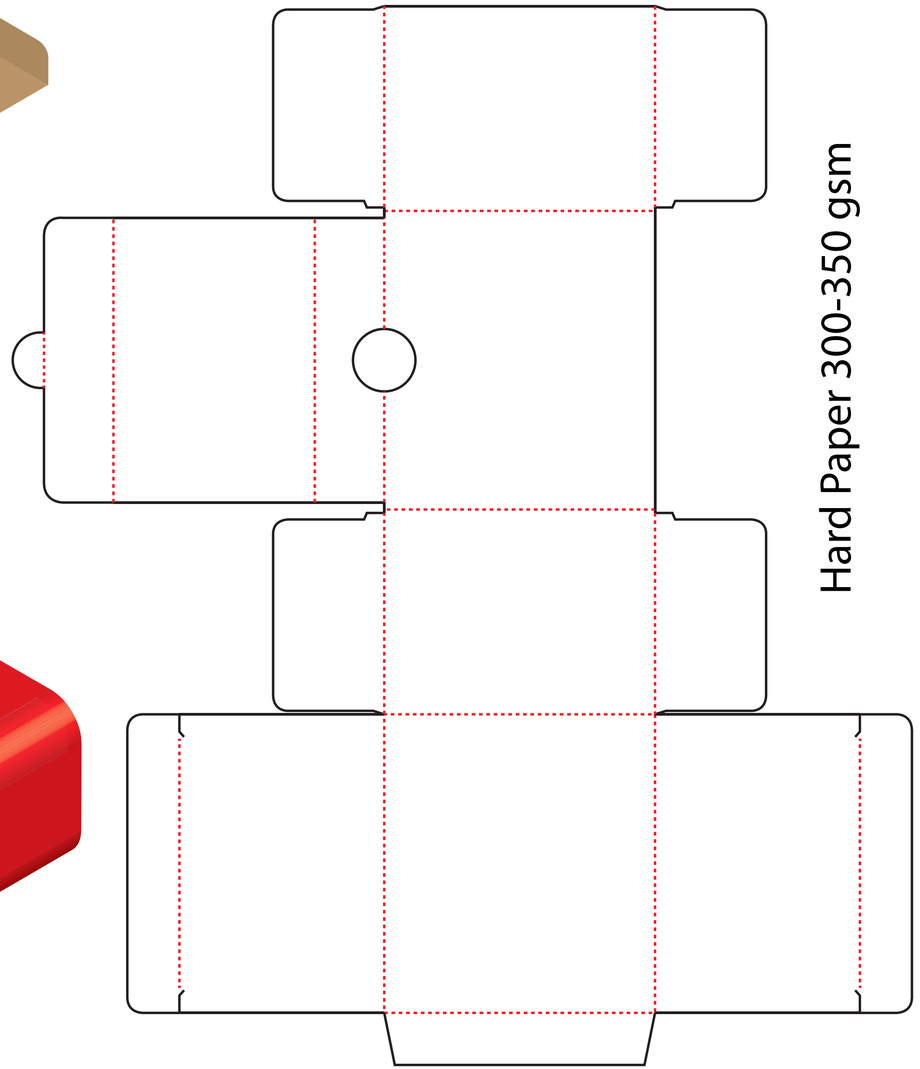

Hard Paper 300-350 gsm

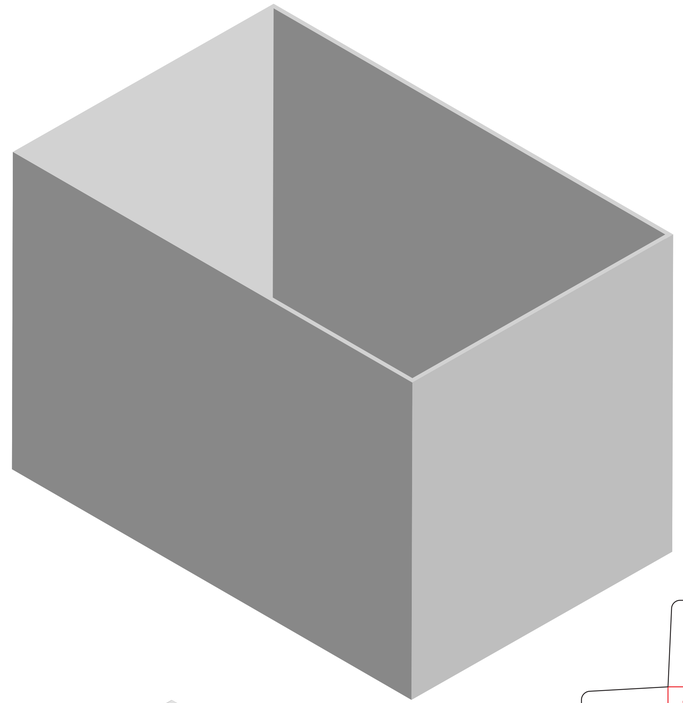

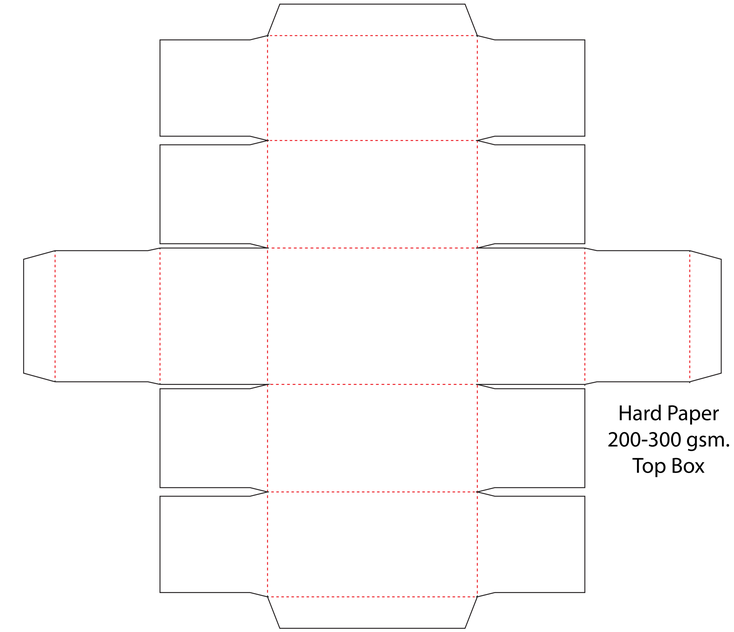

Hard Paper
200-300 gsm.
Top Box

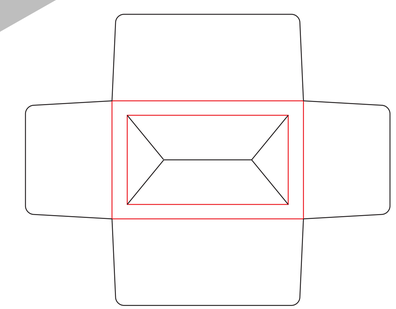

Hard Paper
200-300 gsm.
Product Support

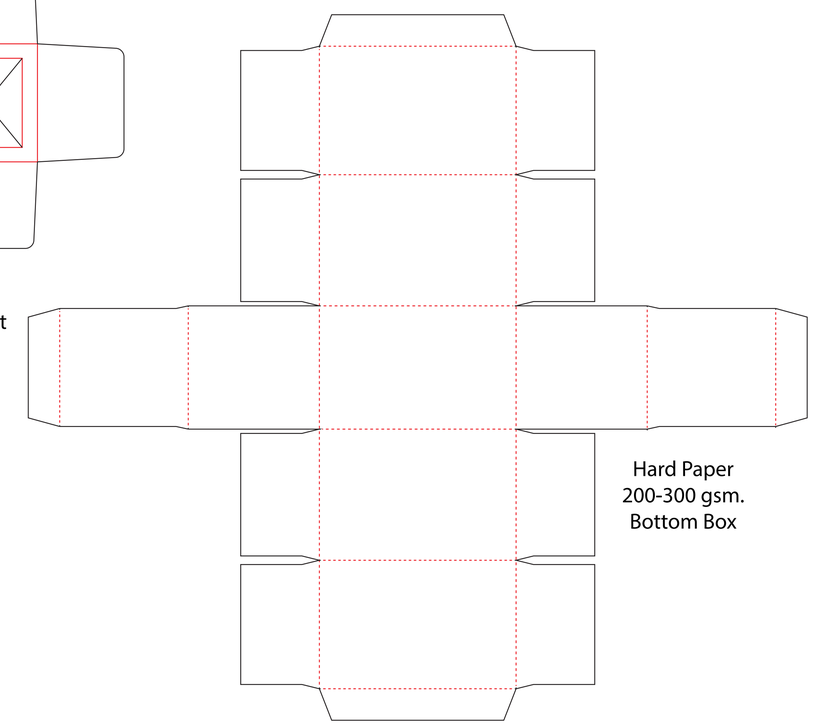

Hard Paper
200-300 gsm.
Bottom Box

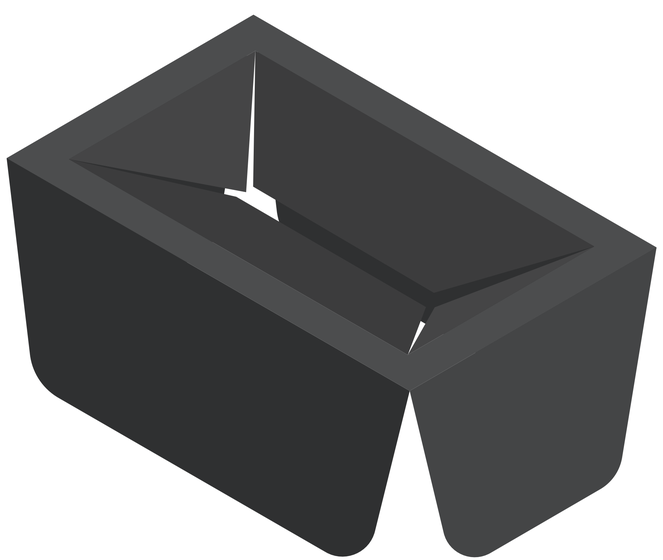

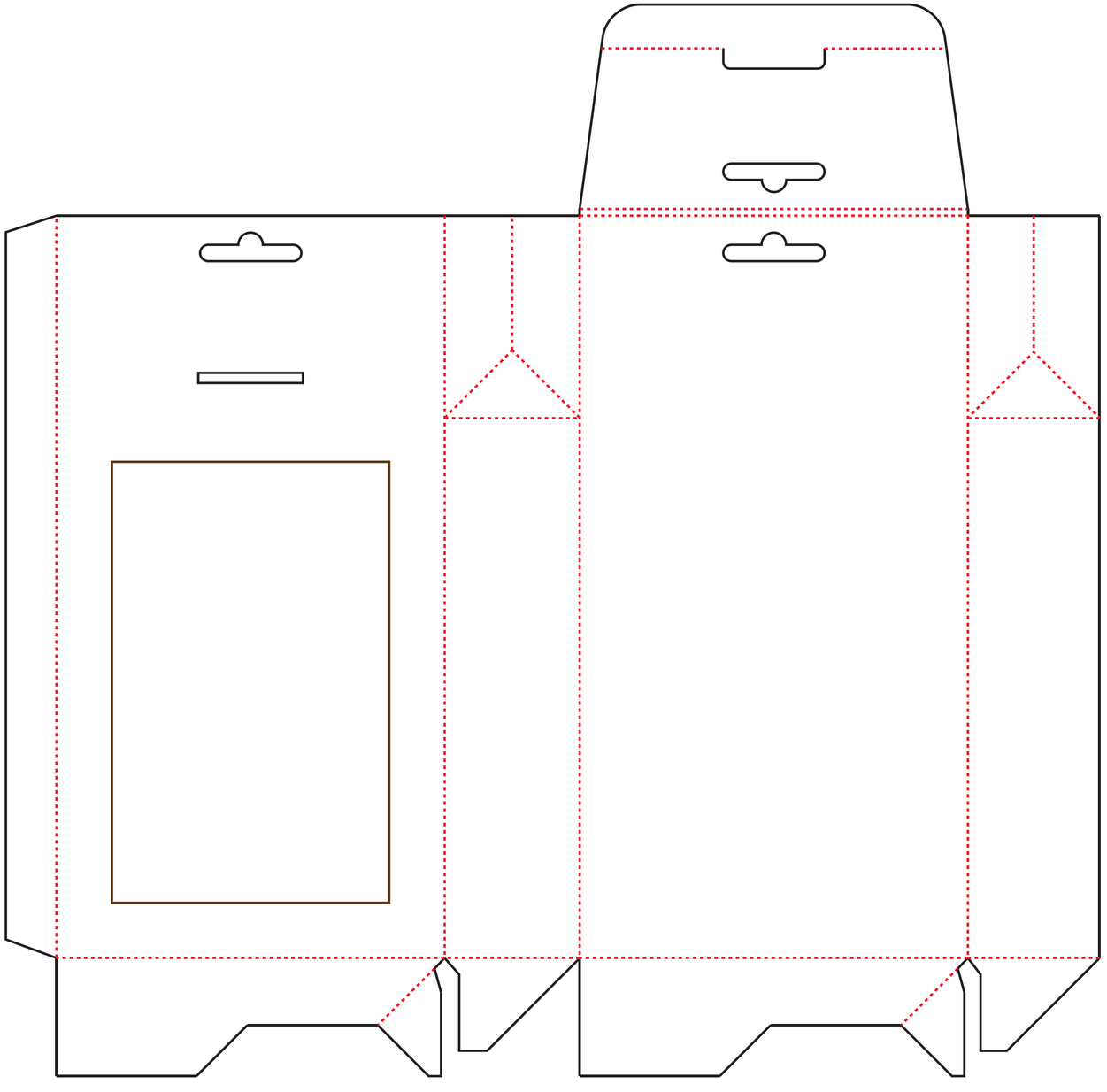

Hard Paper 200-300 gsm

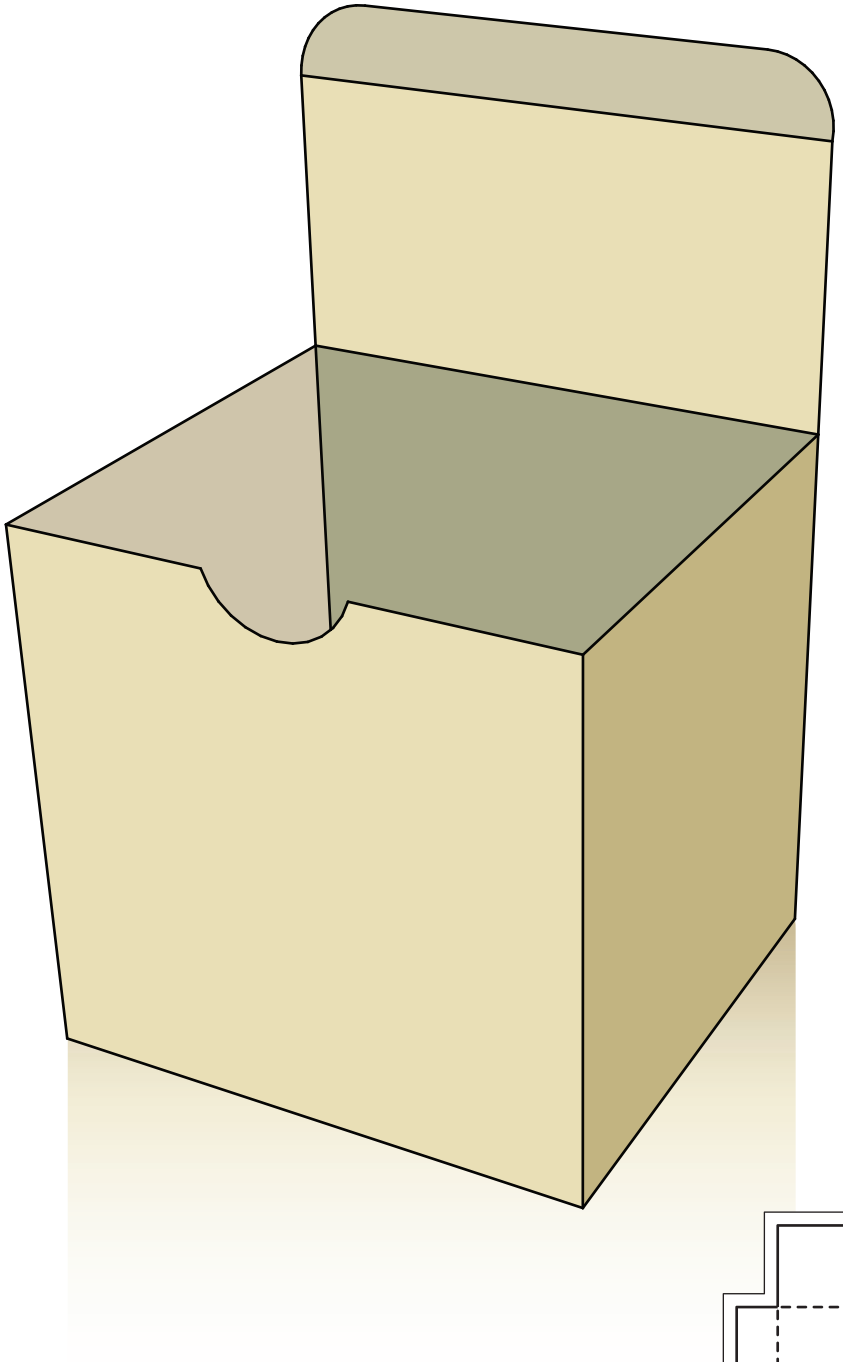

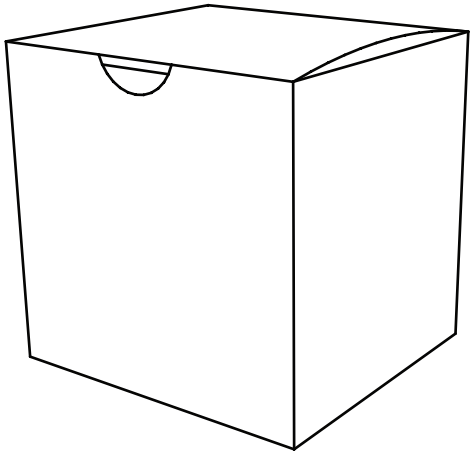

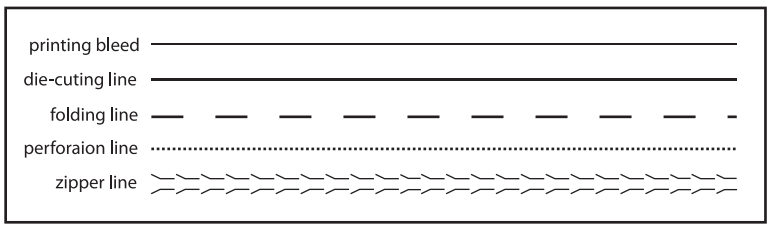
printing bleed
die-cuting line
folding line
perforaion line
zipper line

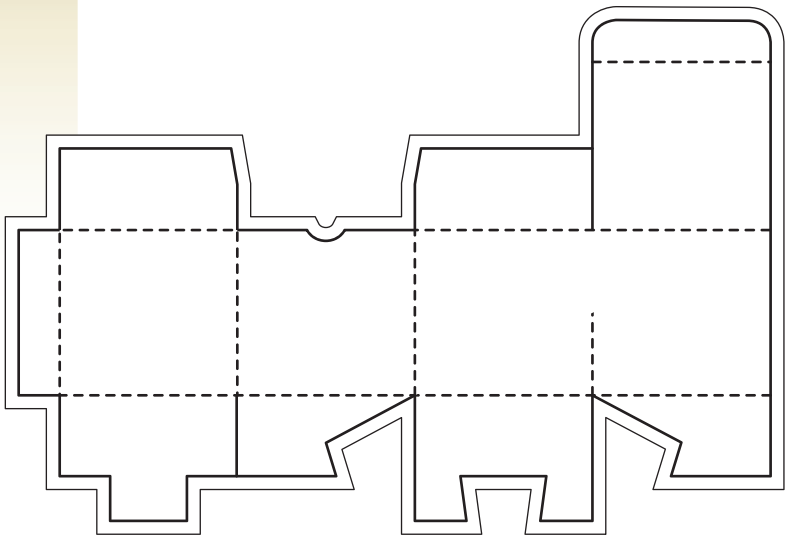

Logo
Brand
Name

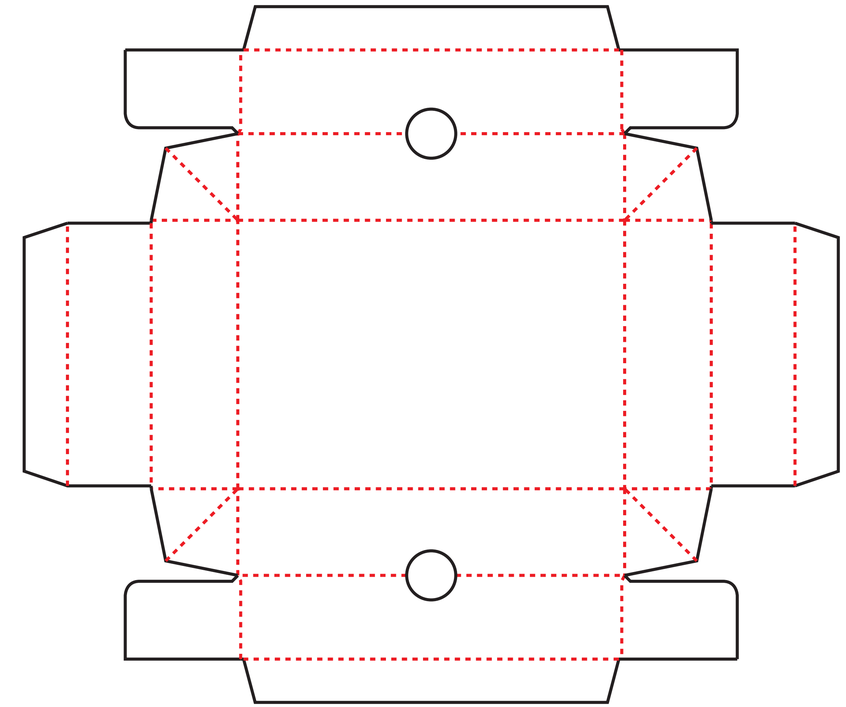

Logo
Brand
Name

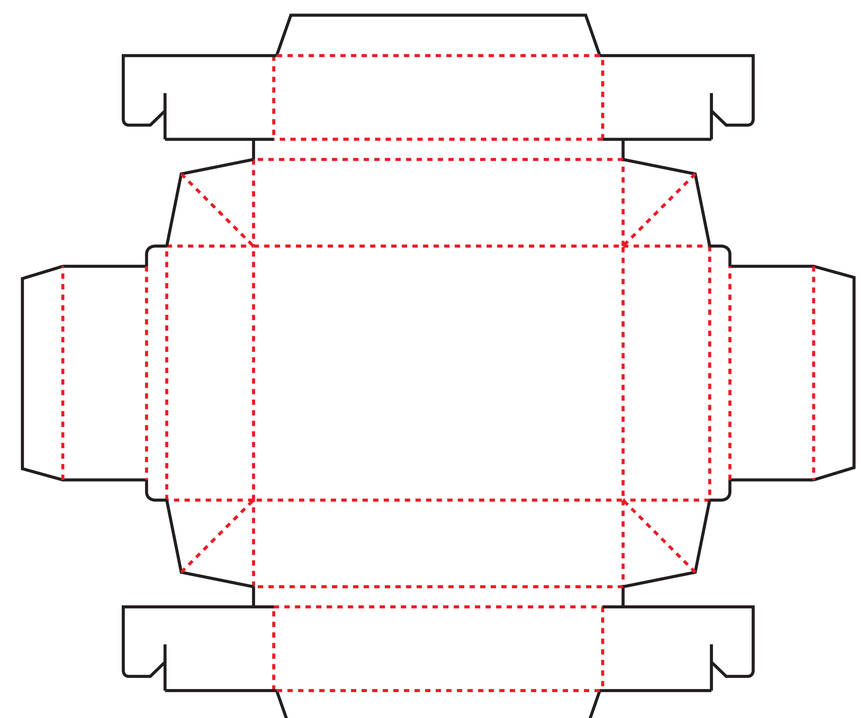

Logo
Brand
Name

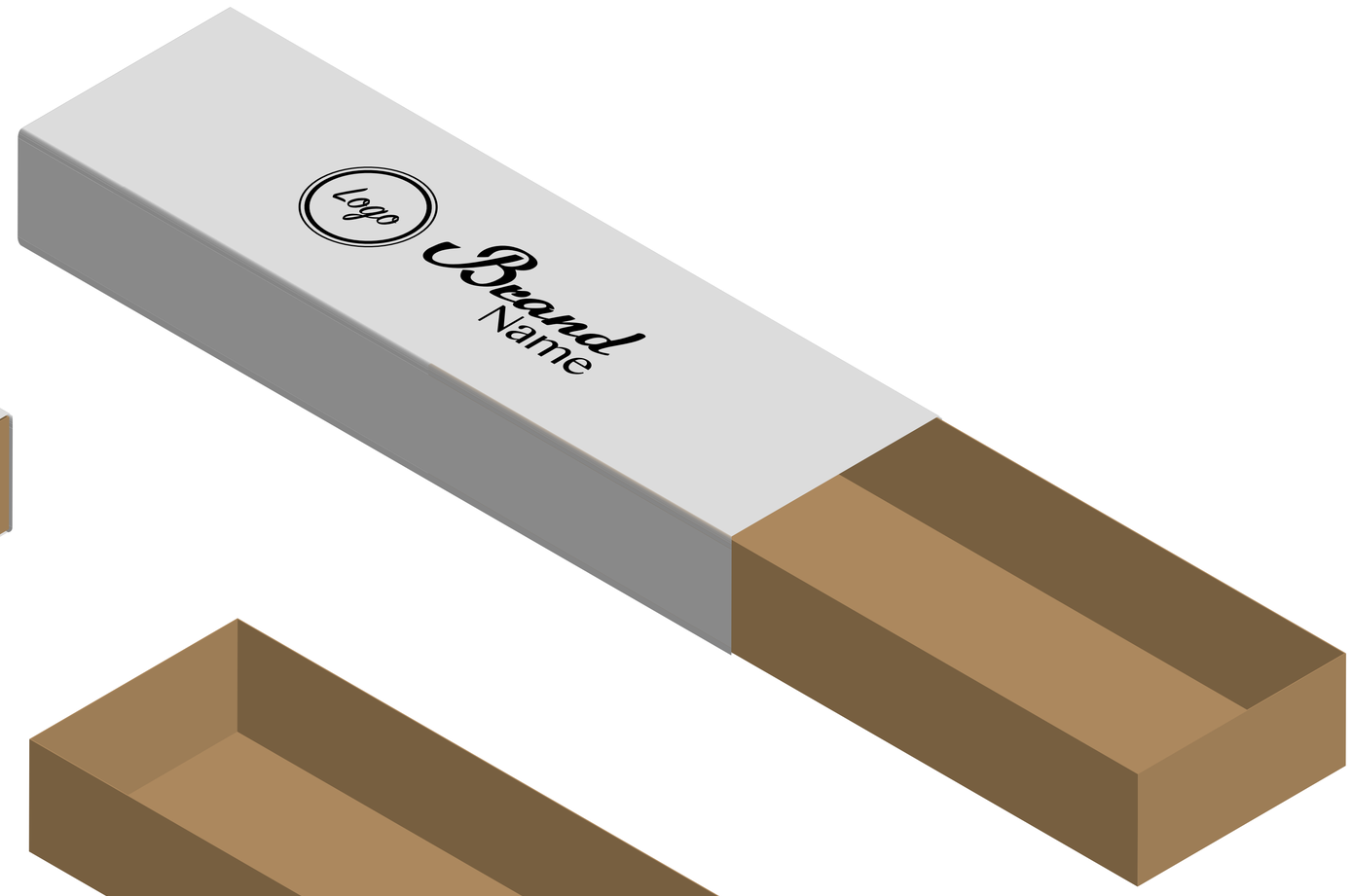
Logo
Brand
Name
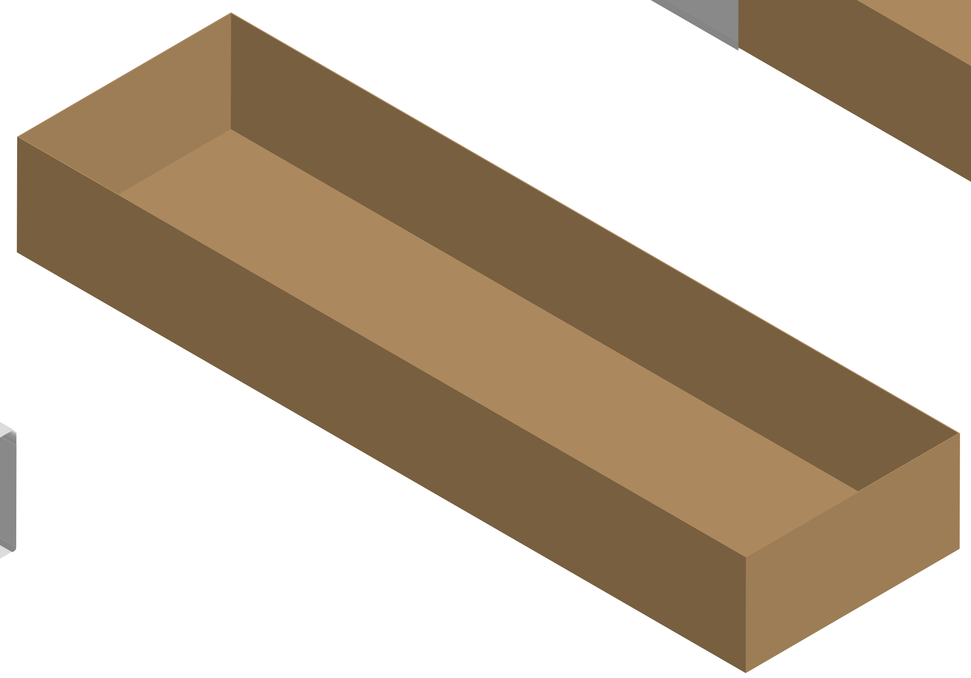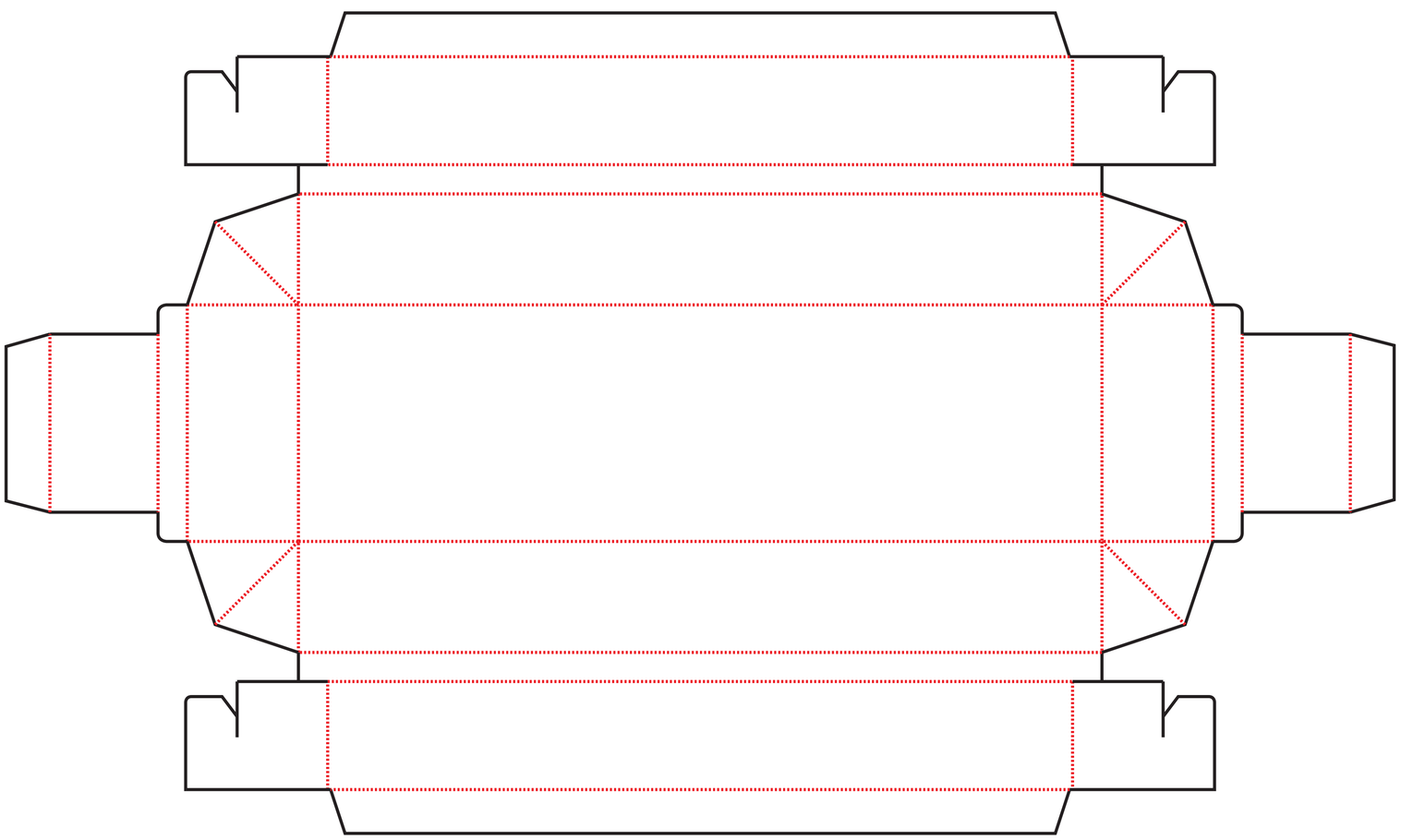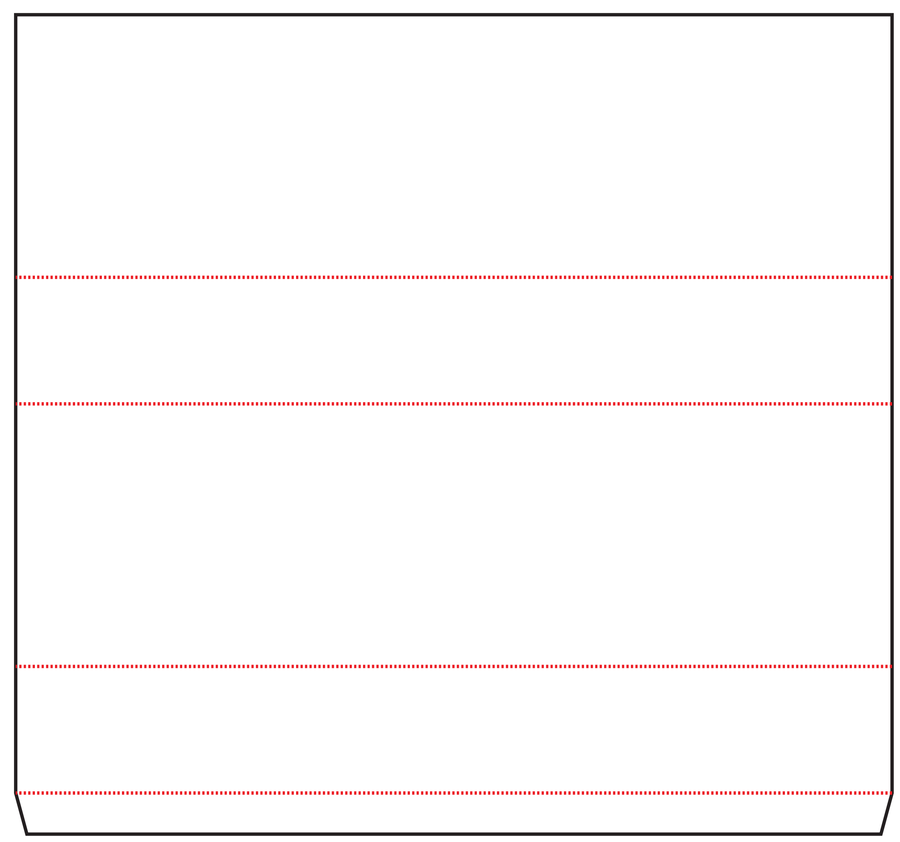
Logo
Brand
Name