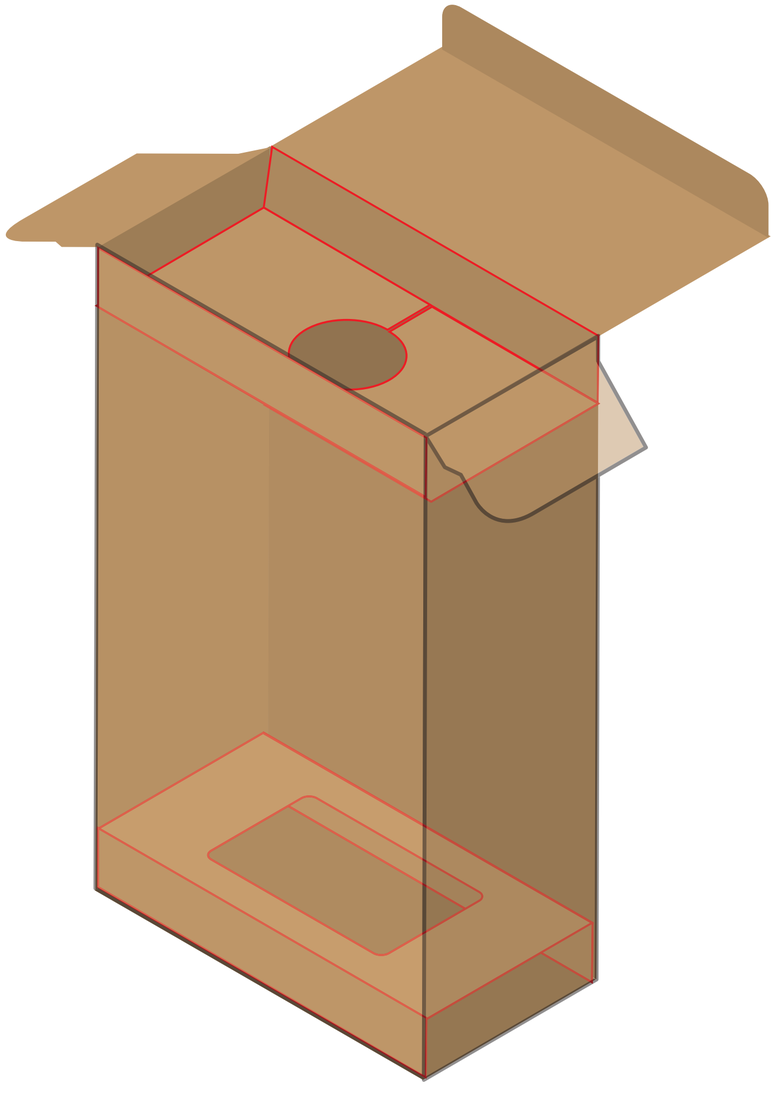

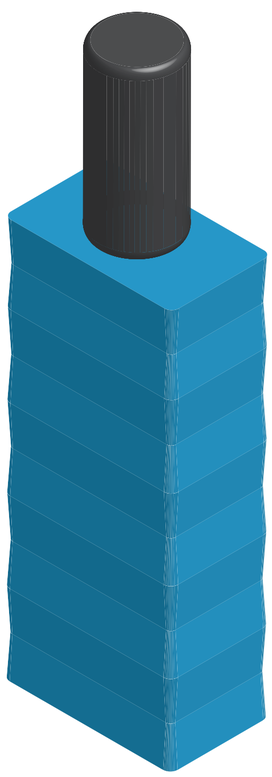

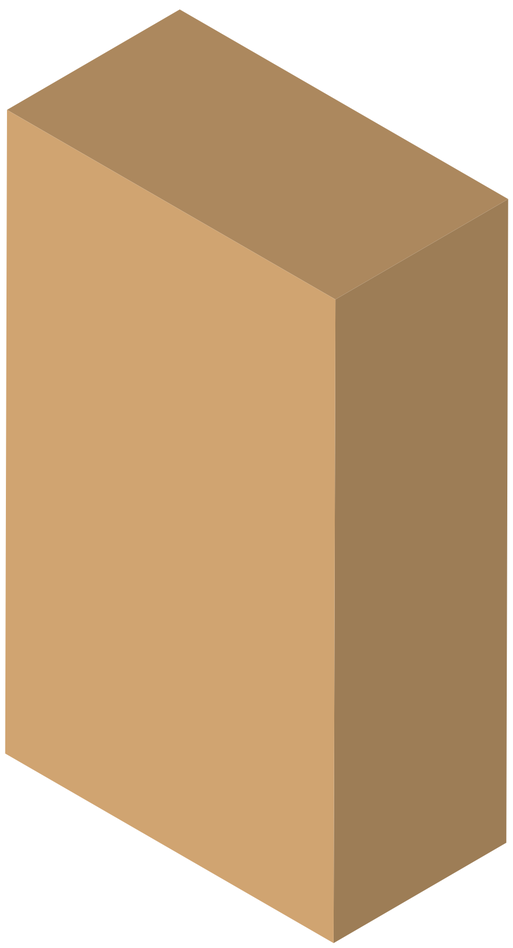

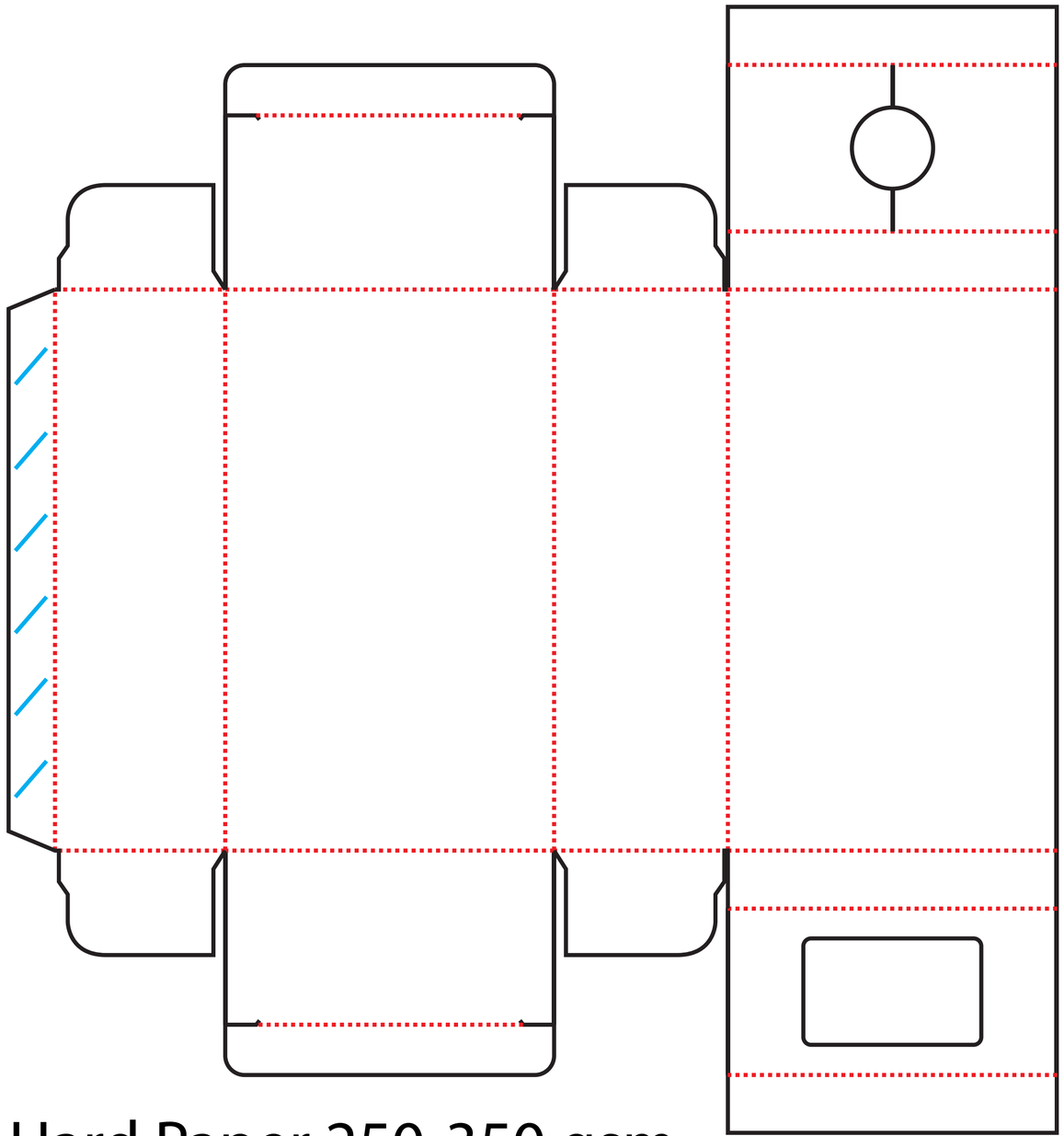

Hard Paper 250-350 gsm

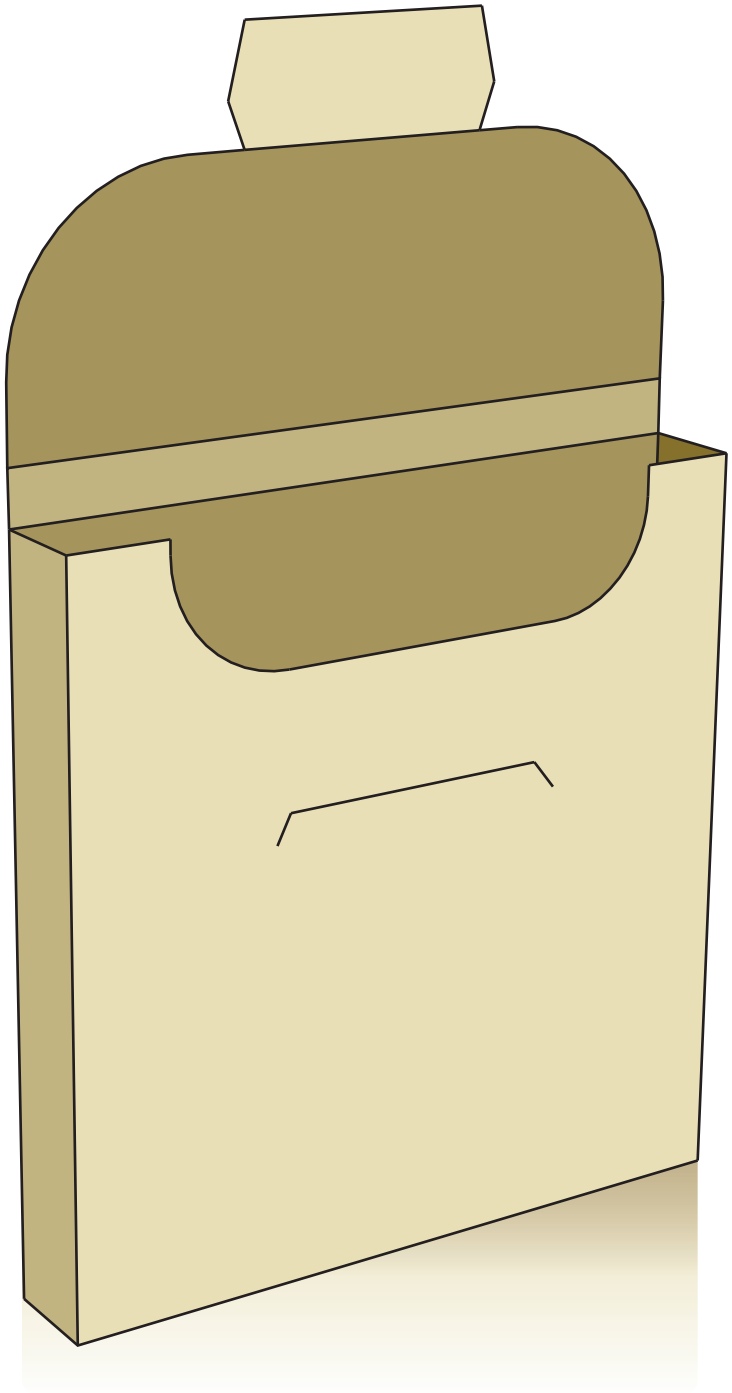

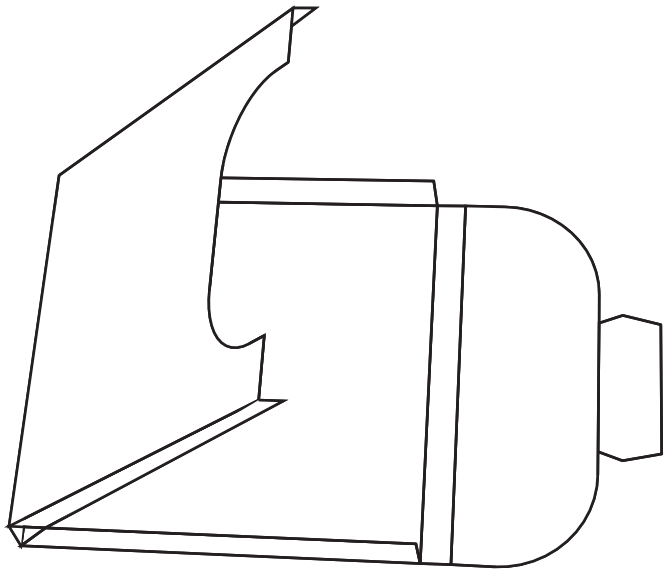

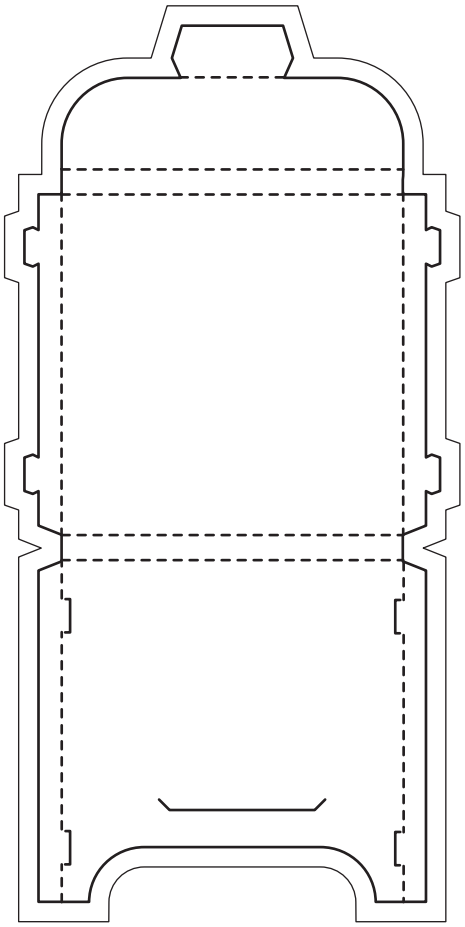

printing bleed

die-cuting line

folding line

perforaion line

zipper line

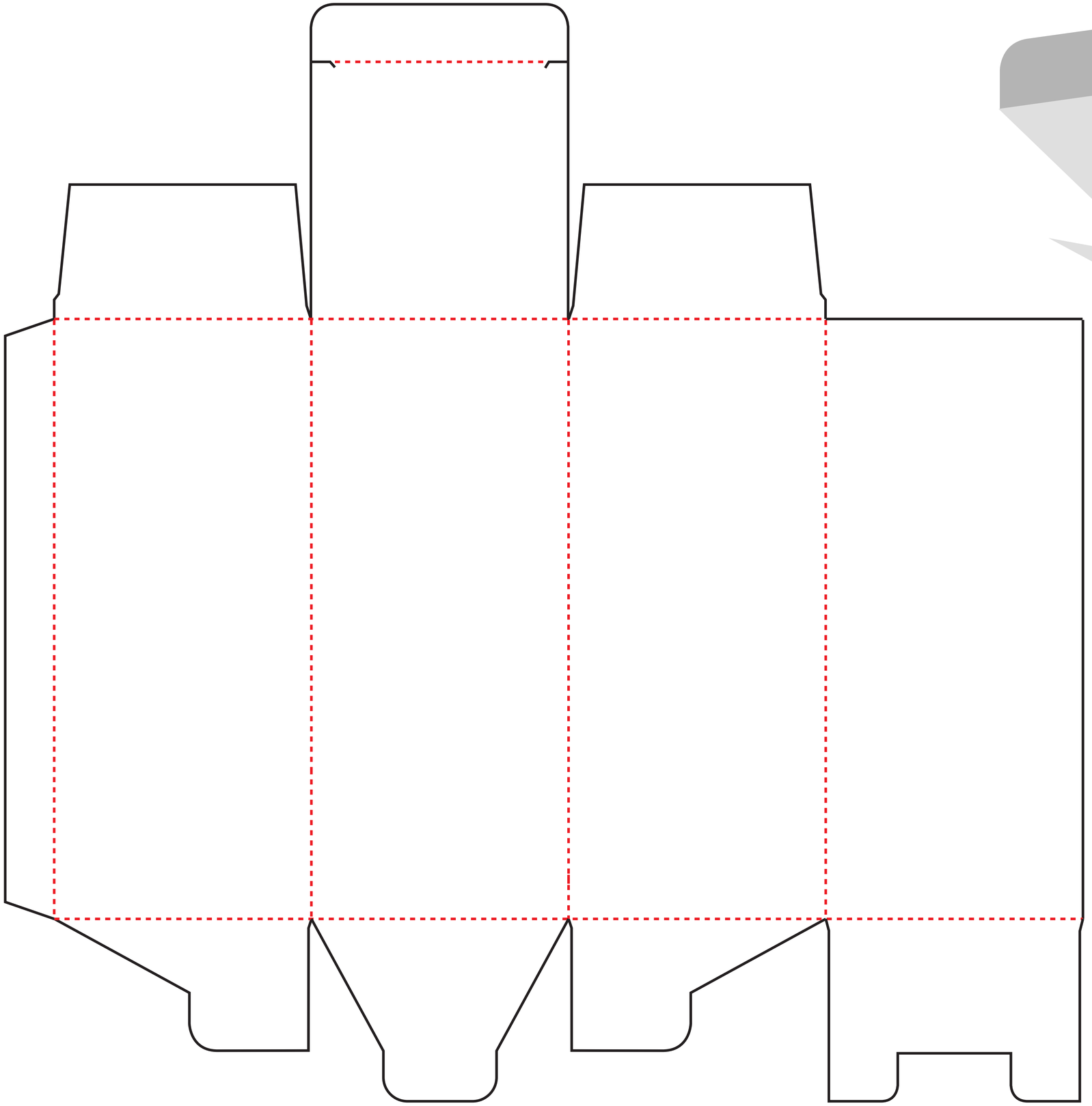

Logo
Brand
Name

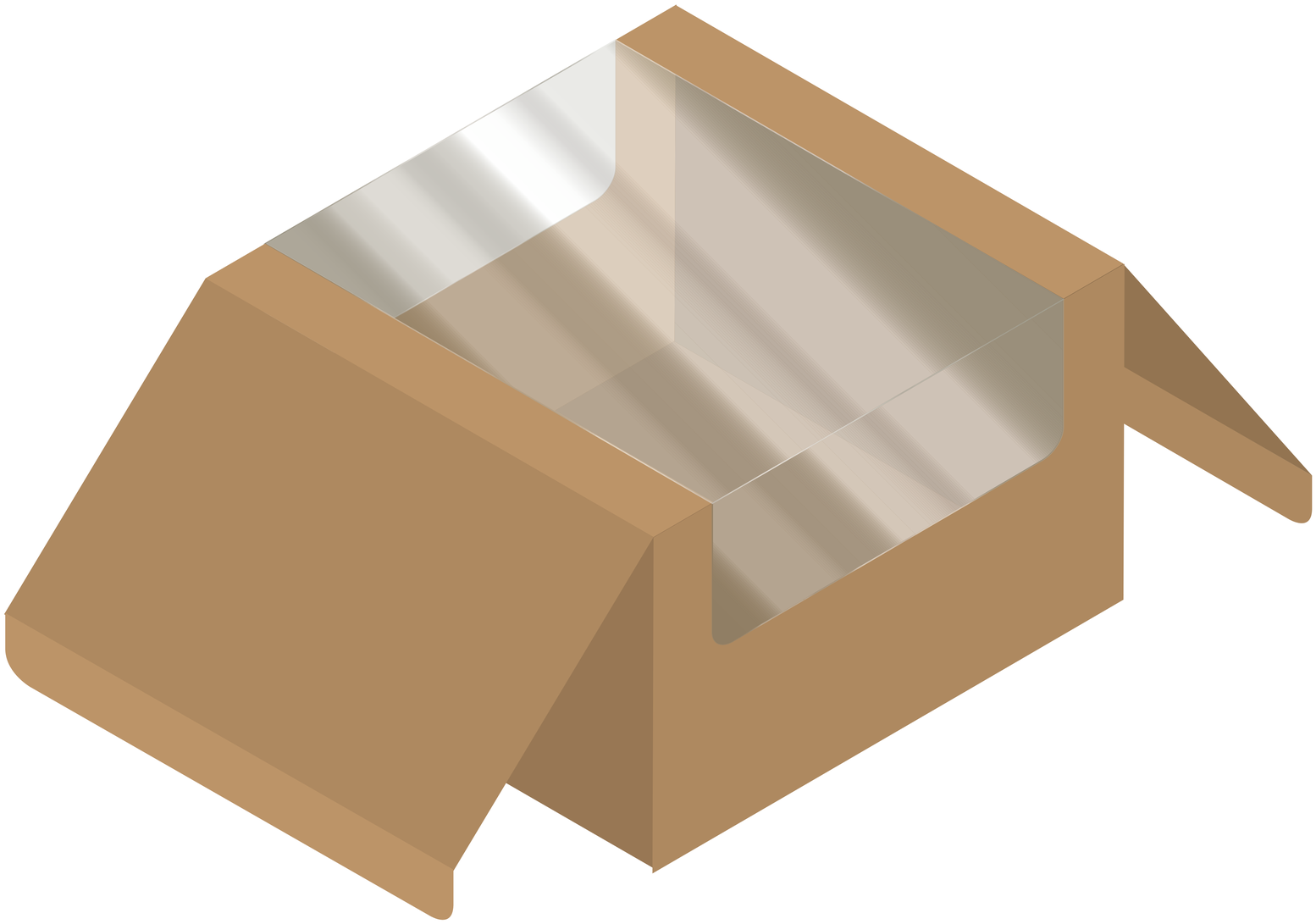

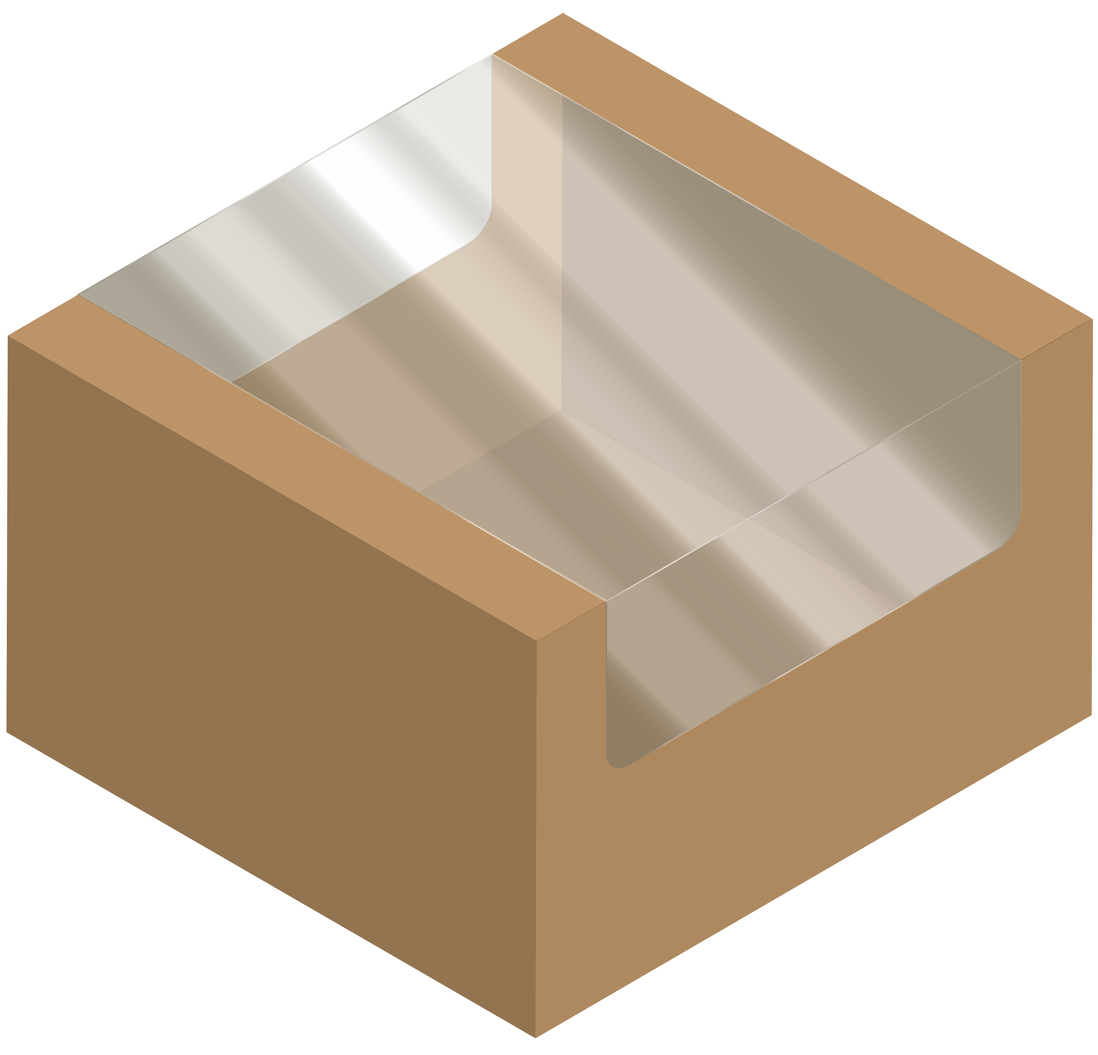

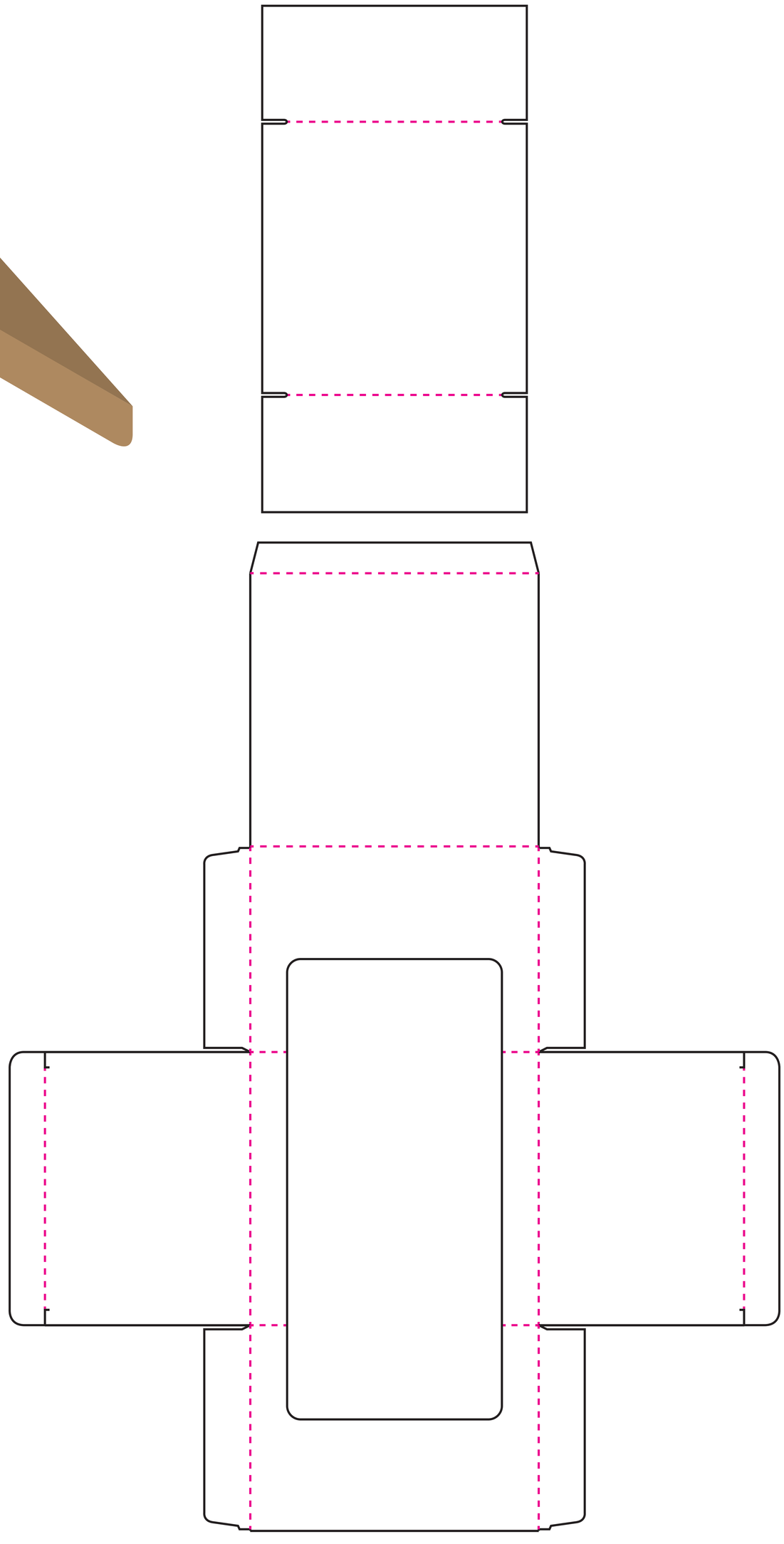

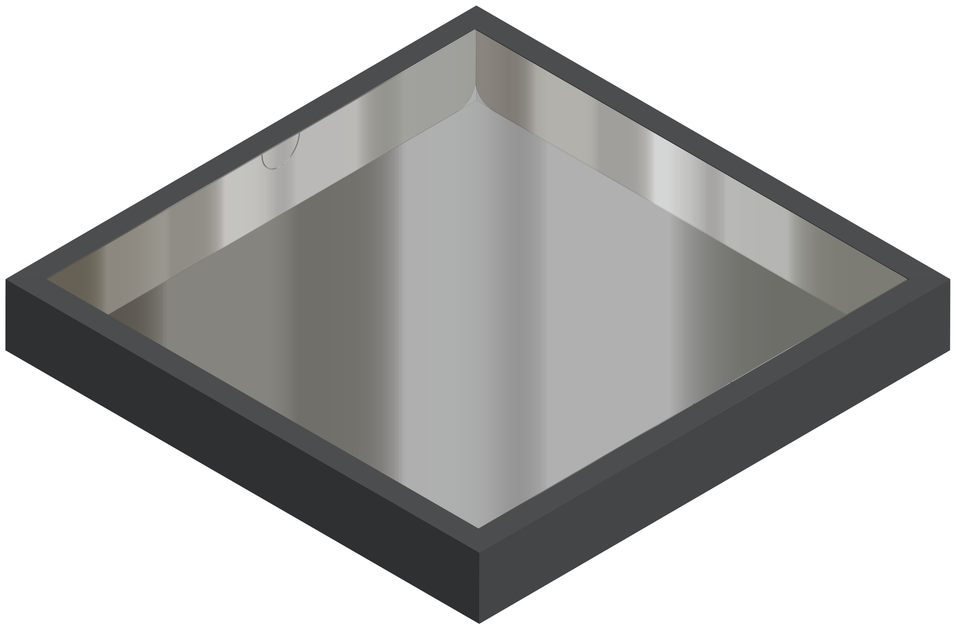

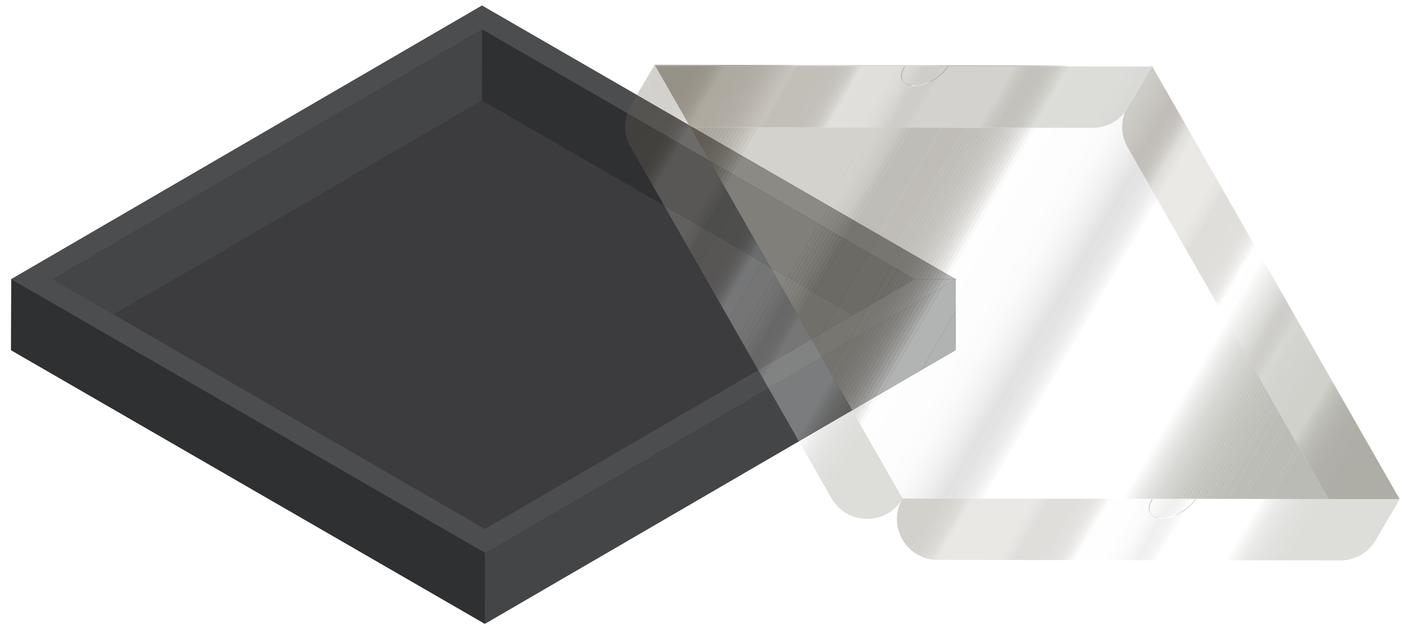

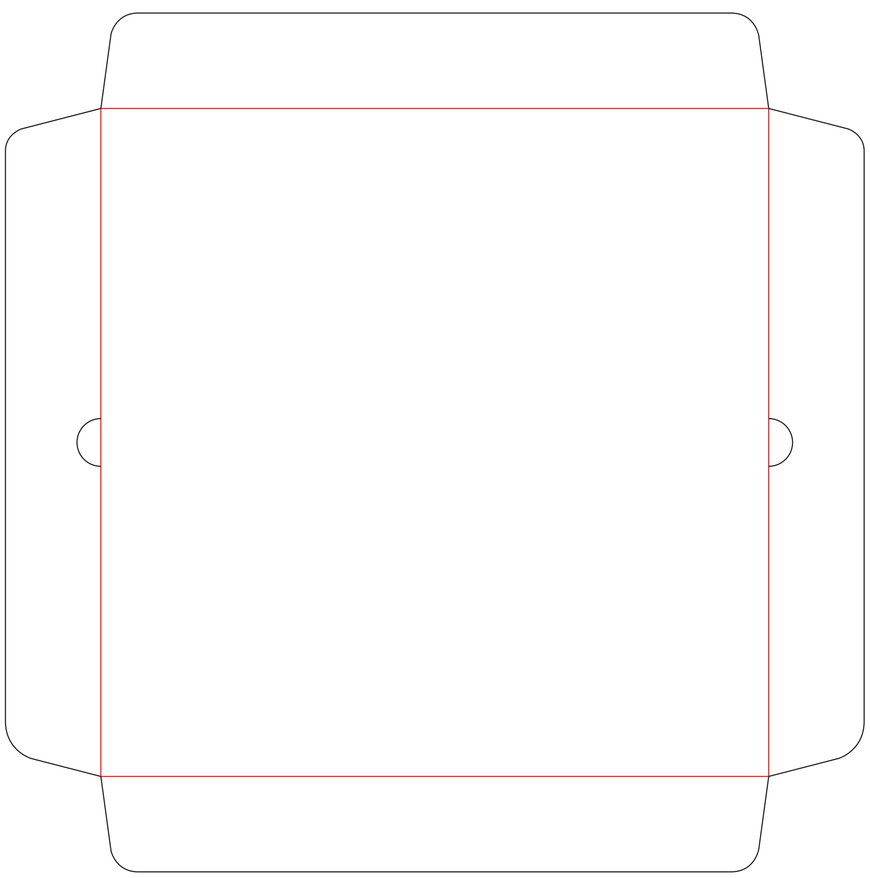

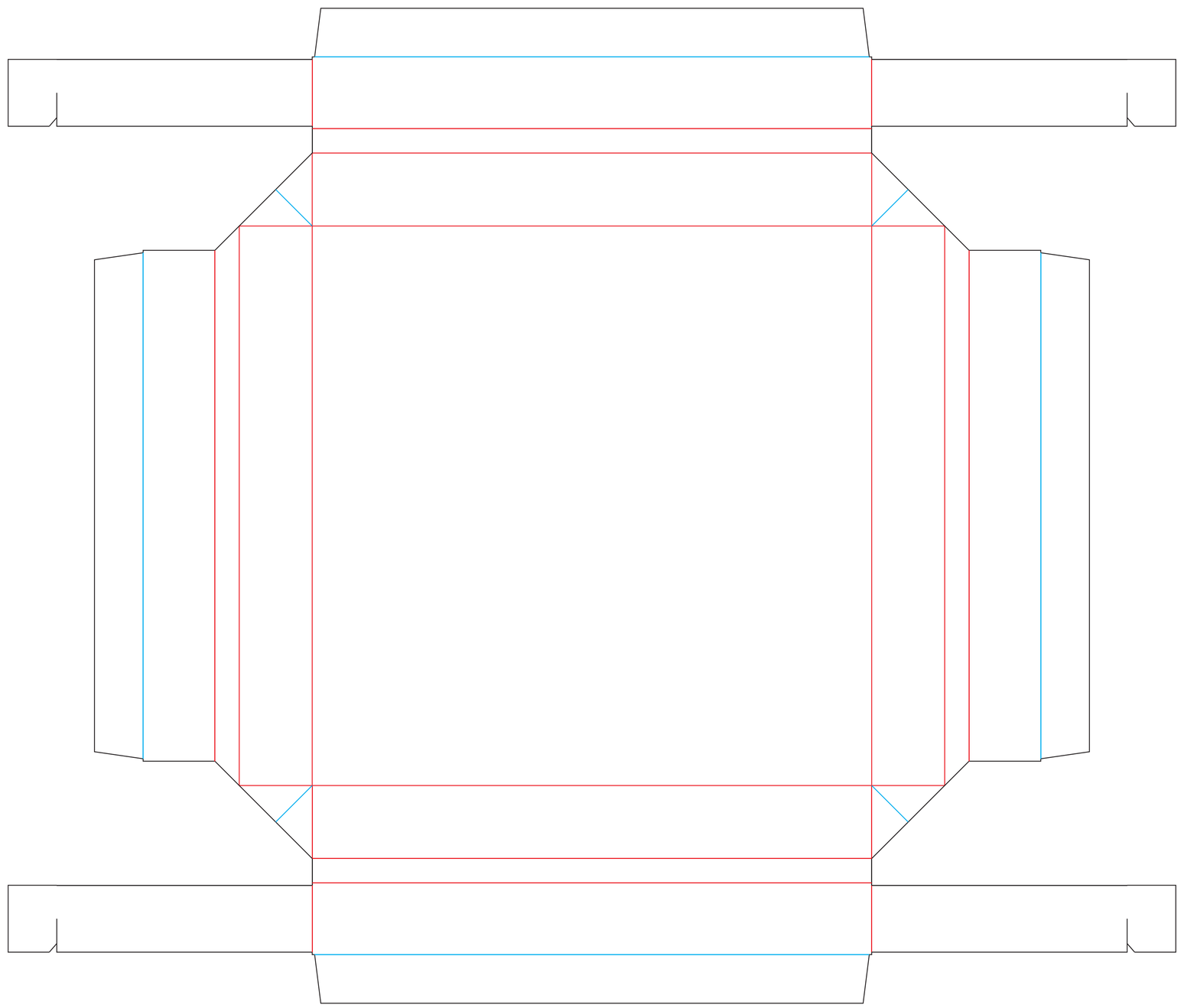

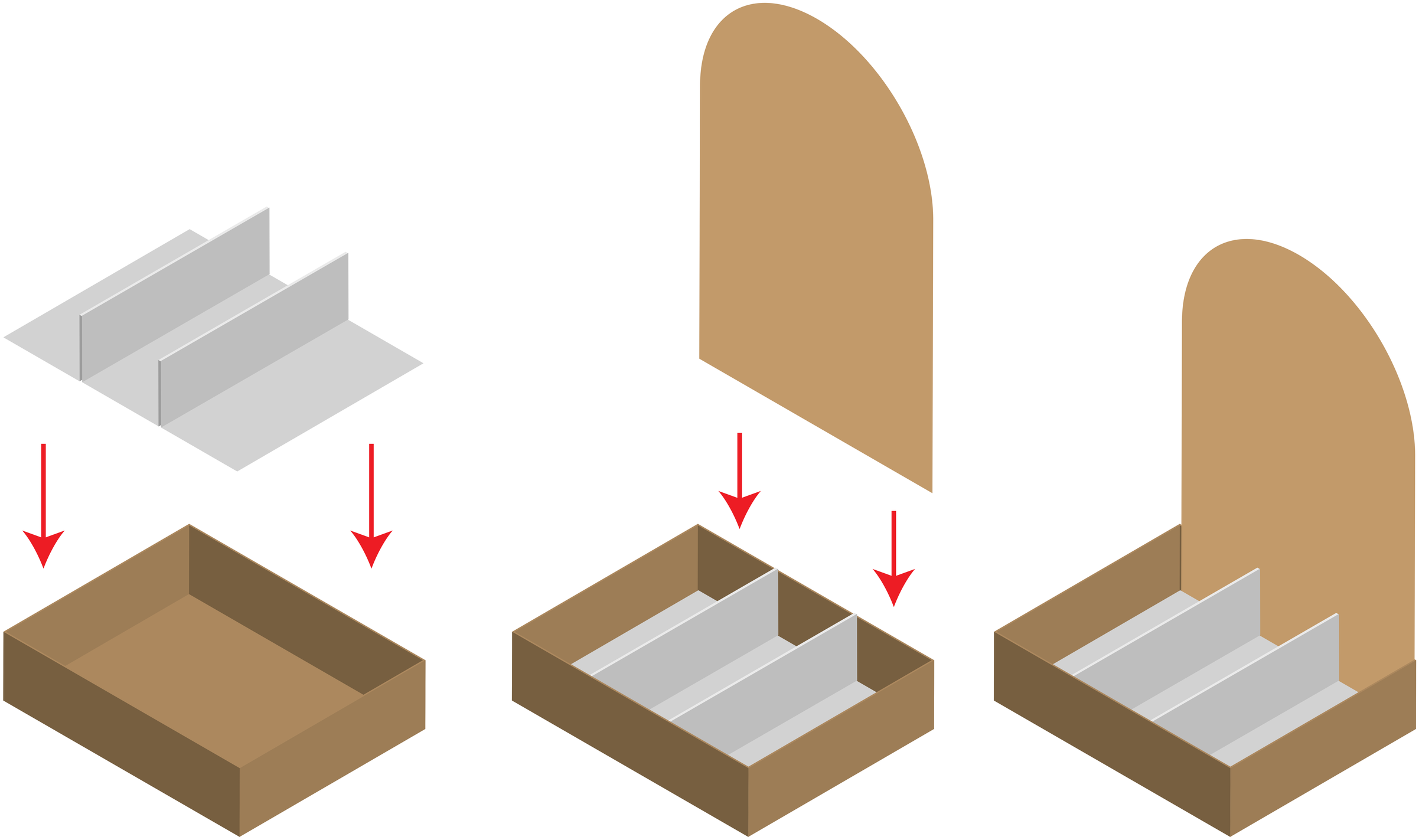

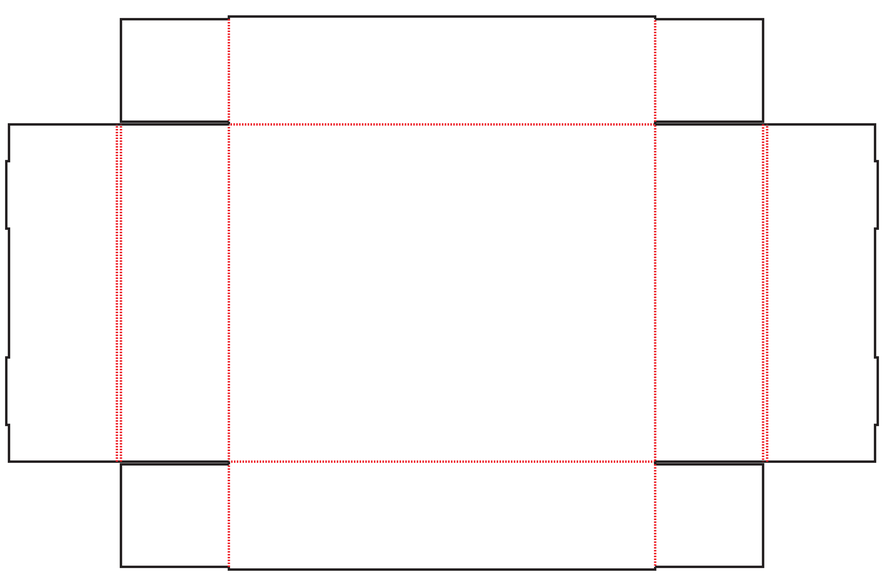

Hard Paper 350 gsm
Box

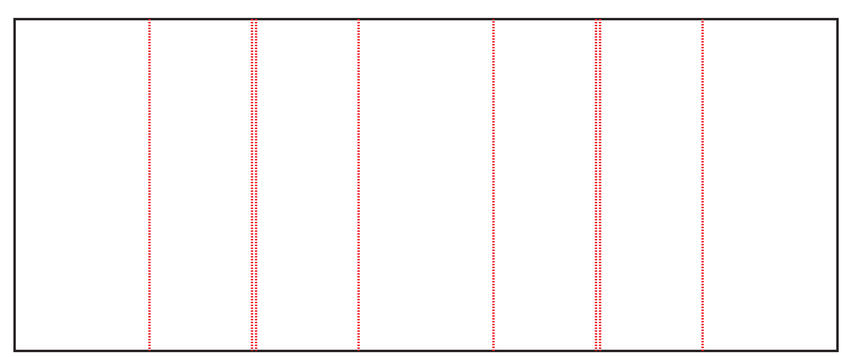

Hard Paper 250-350 gsm
Partition

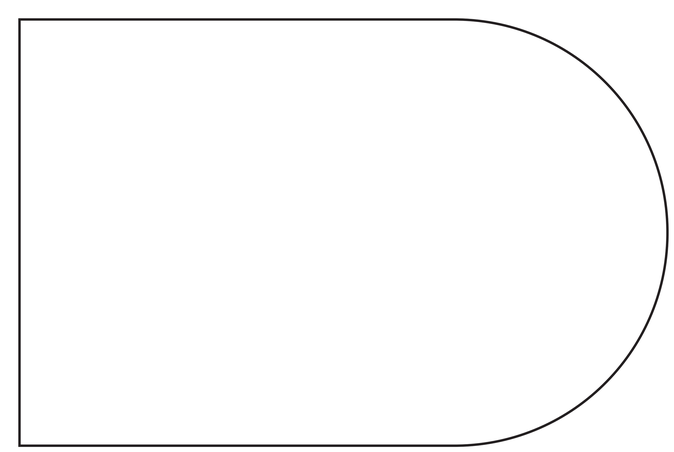

Hard Paper 250-350 gsm
Insert

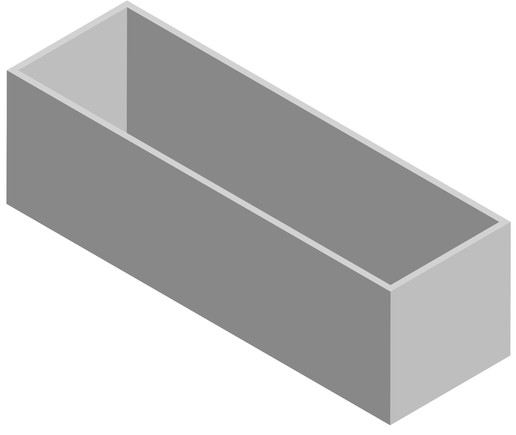

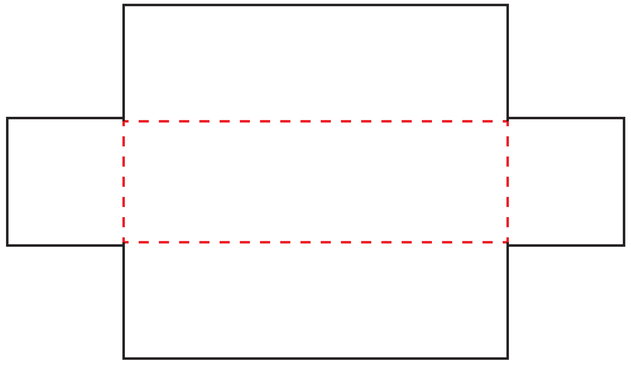

Hard Board Paper
Thick 0.14 cm
Sleeve Box

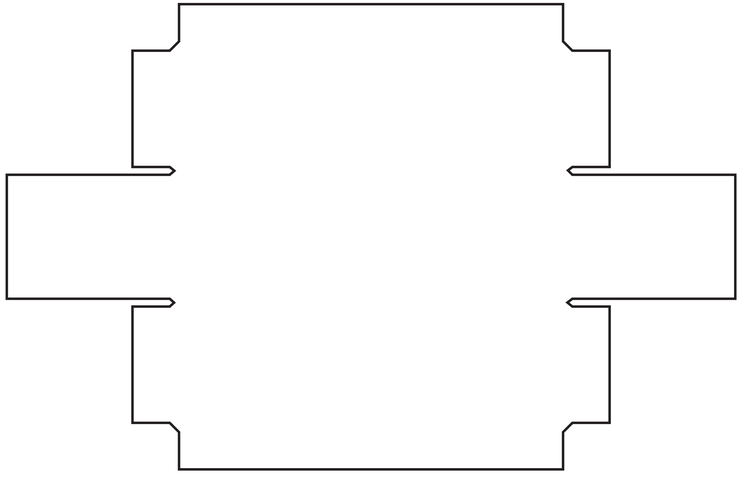

Wrapping Paper
Sleeve Box

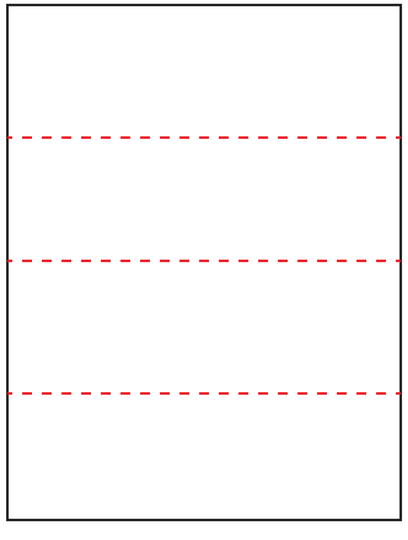

Hard Board Paper
Thick 0.14 cm
Box

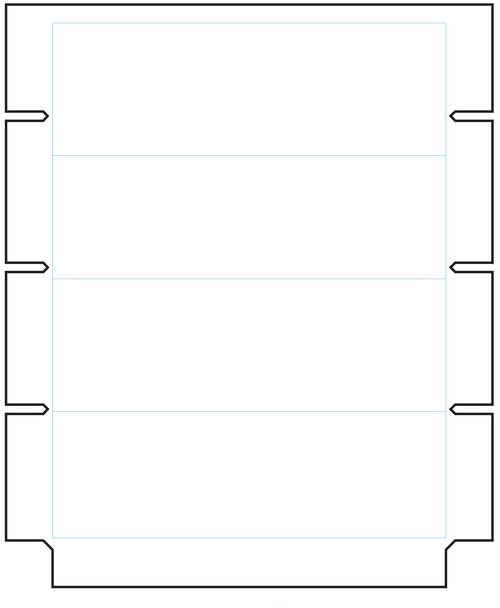

Wrapping Paper
Box

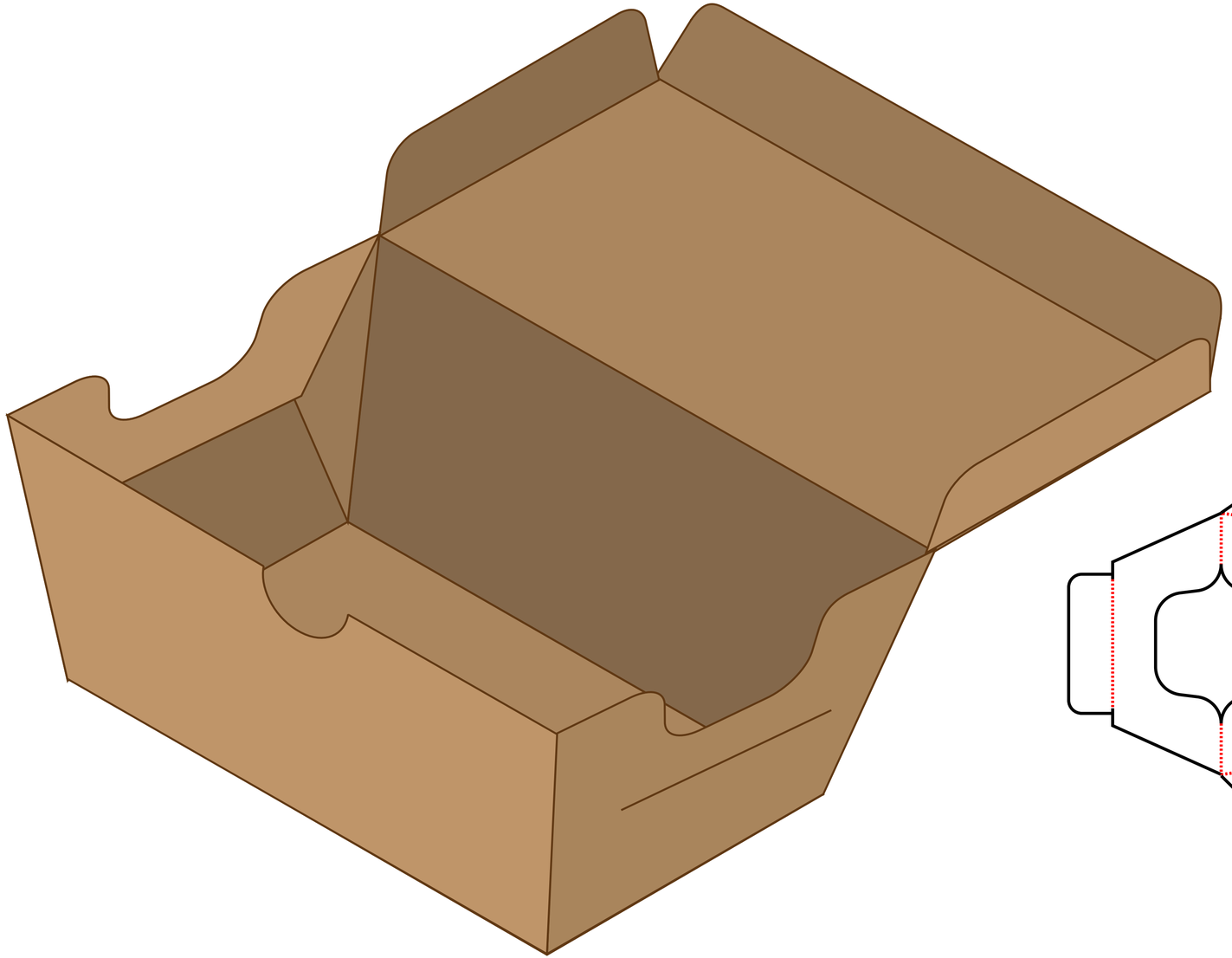

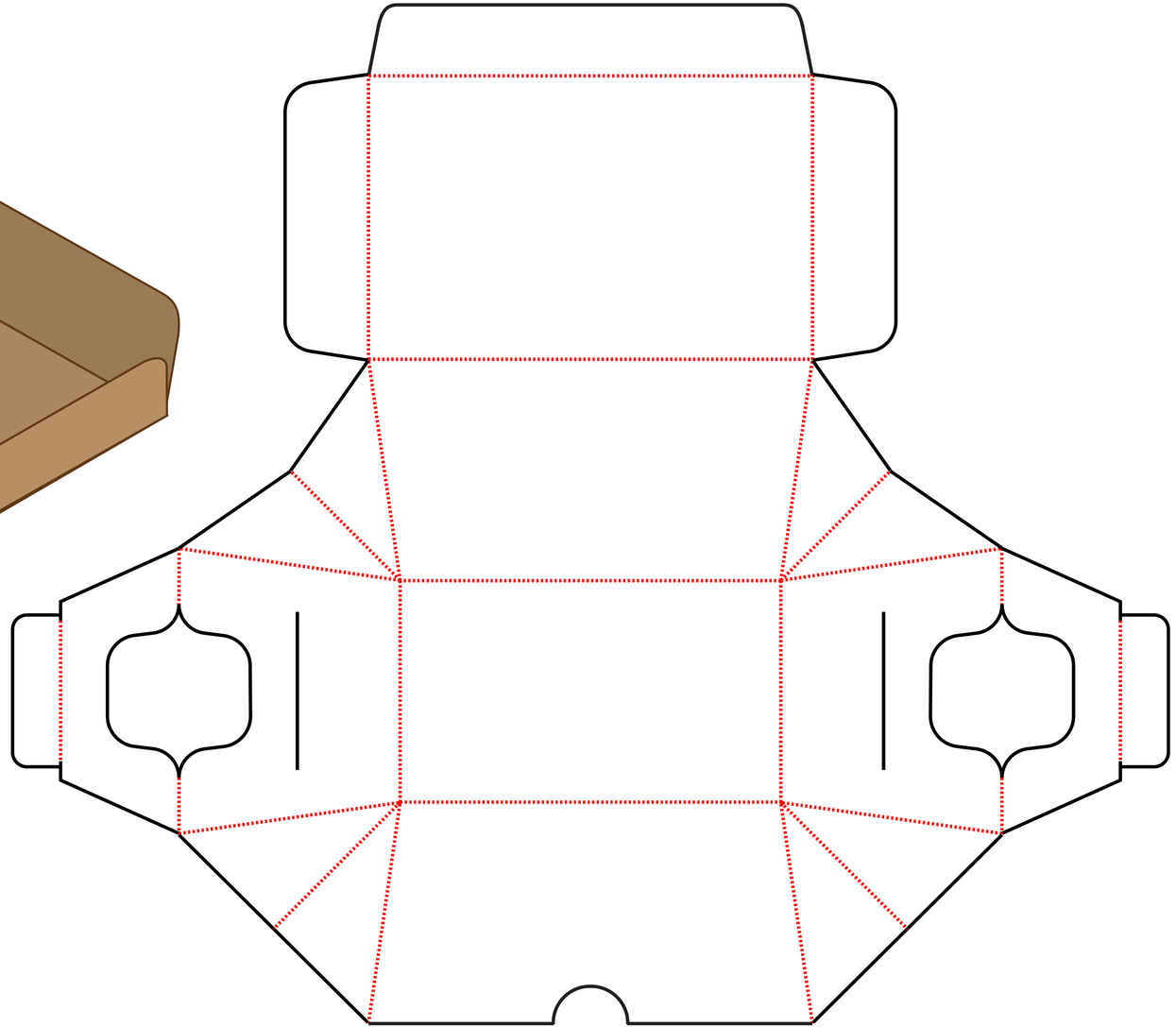

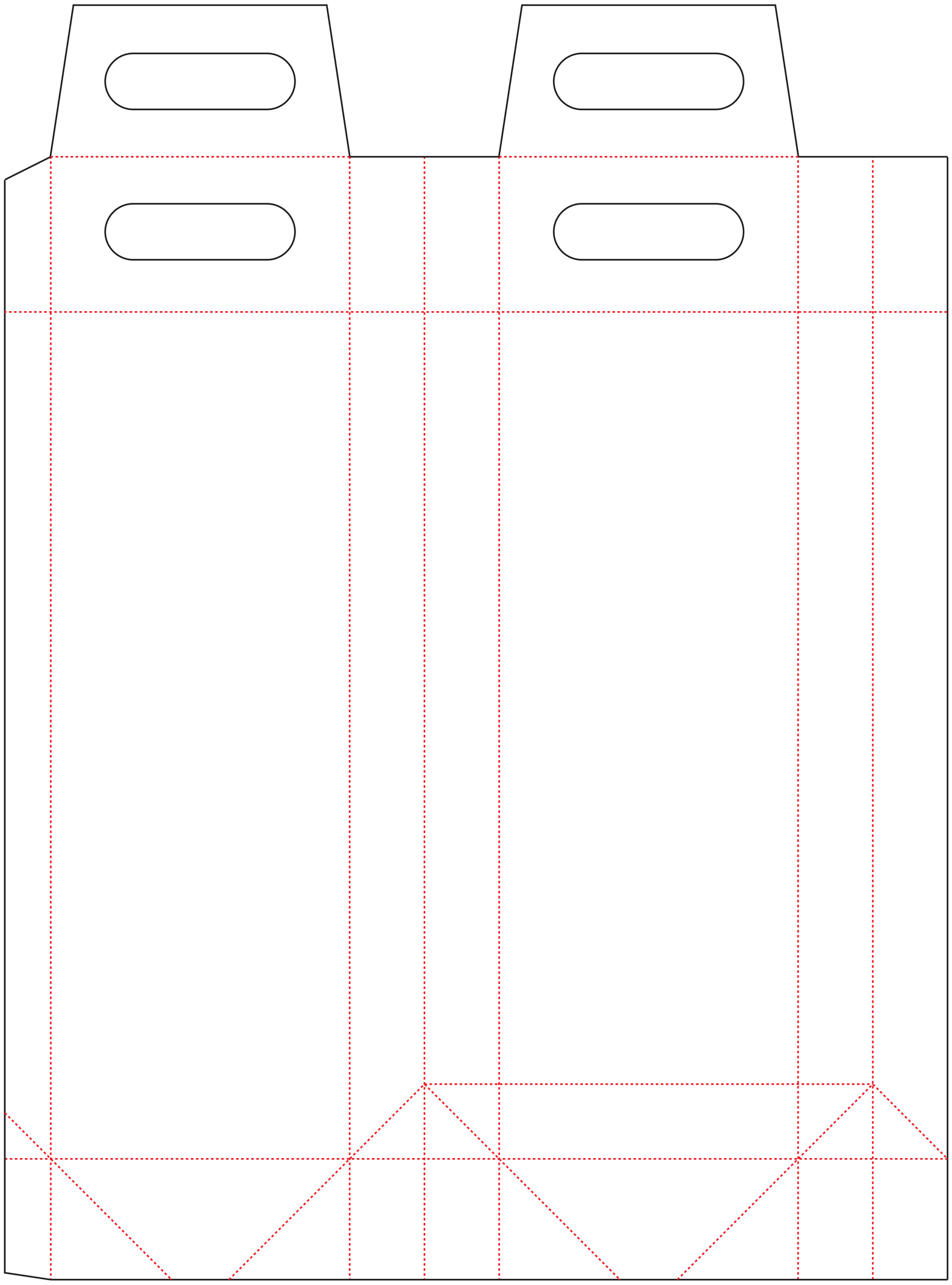

Logo
Brand
Name

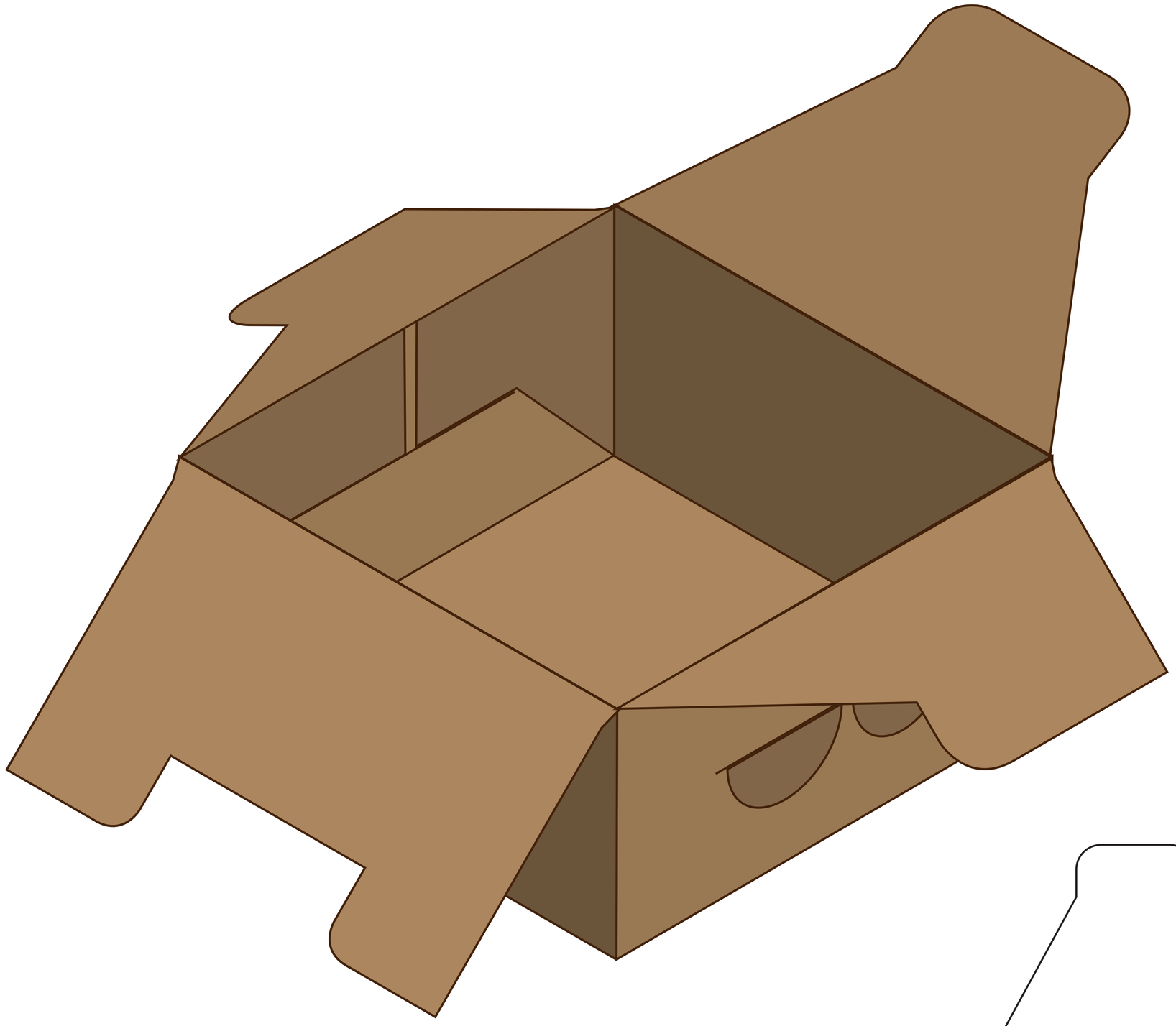

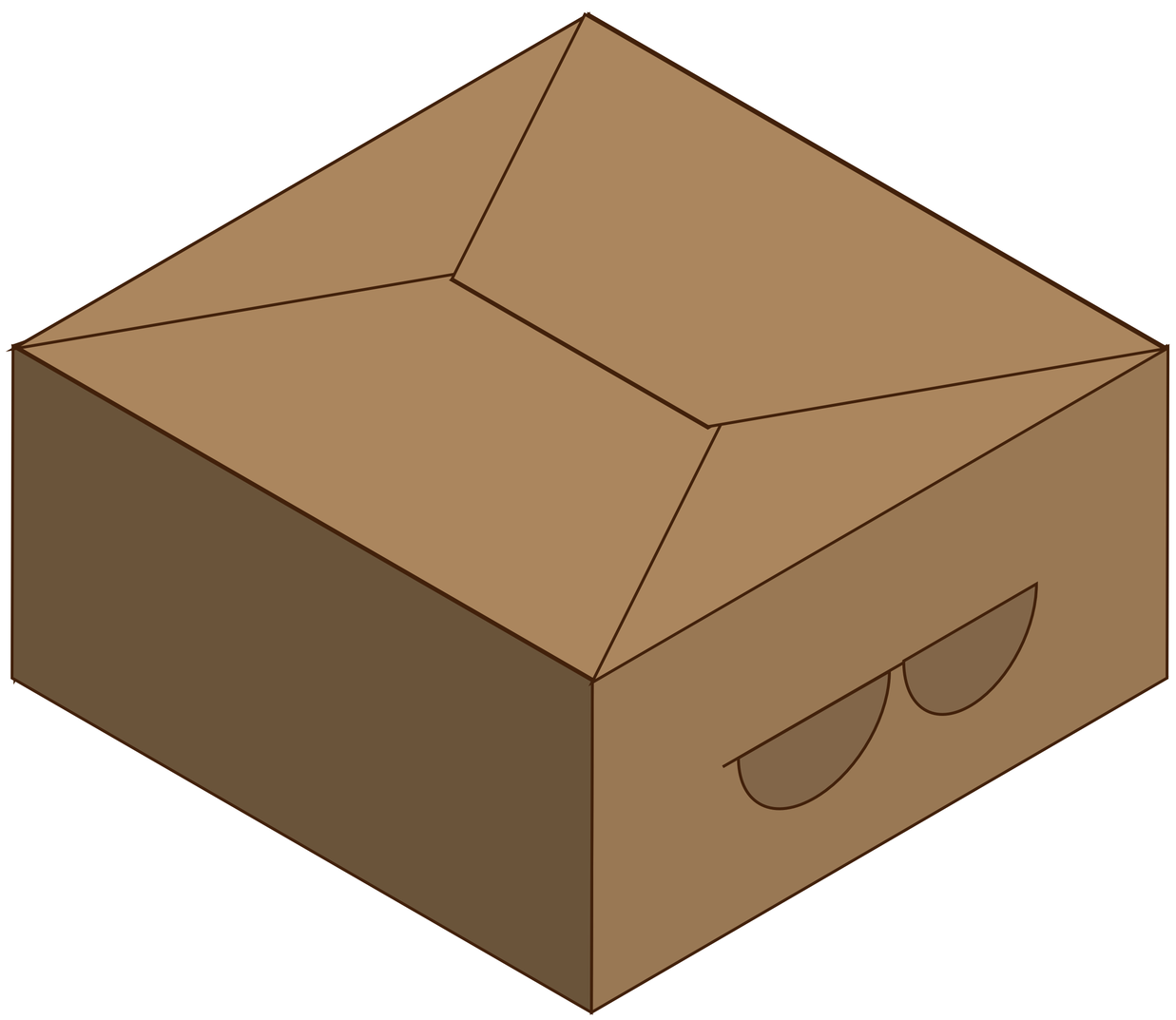

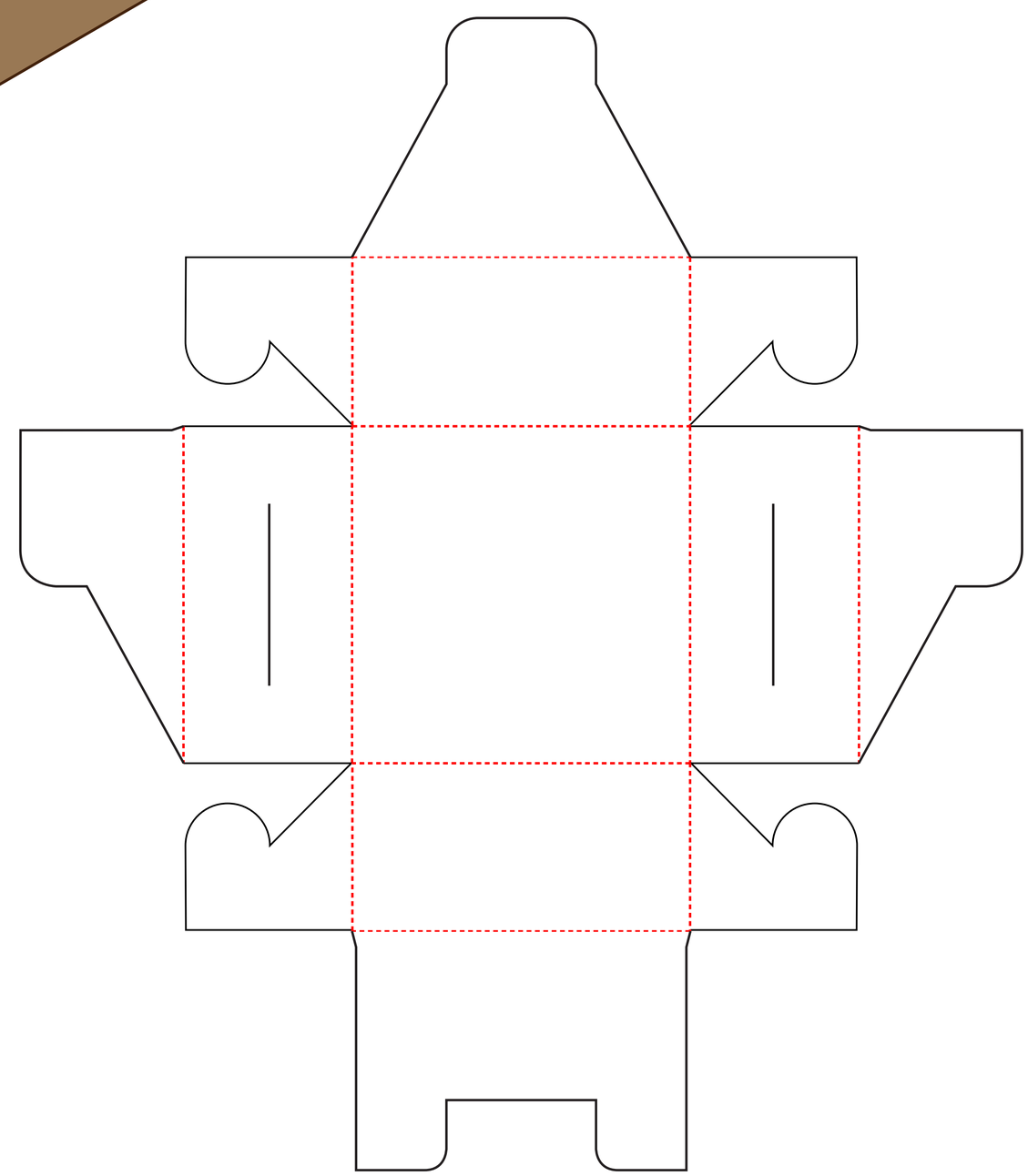

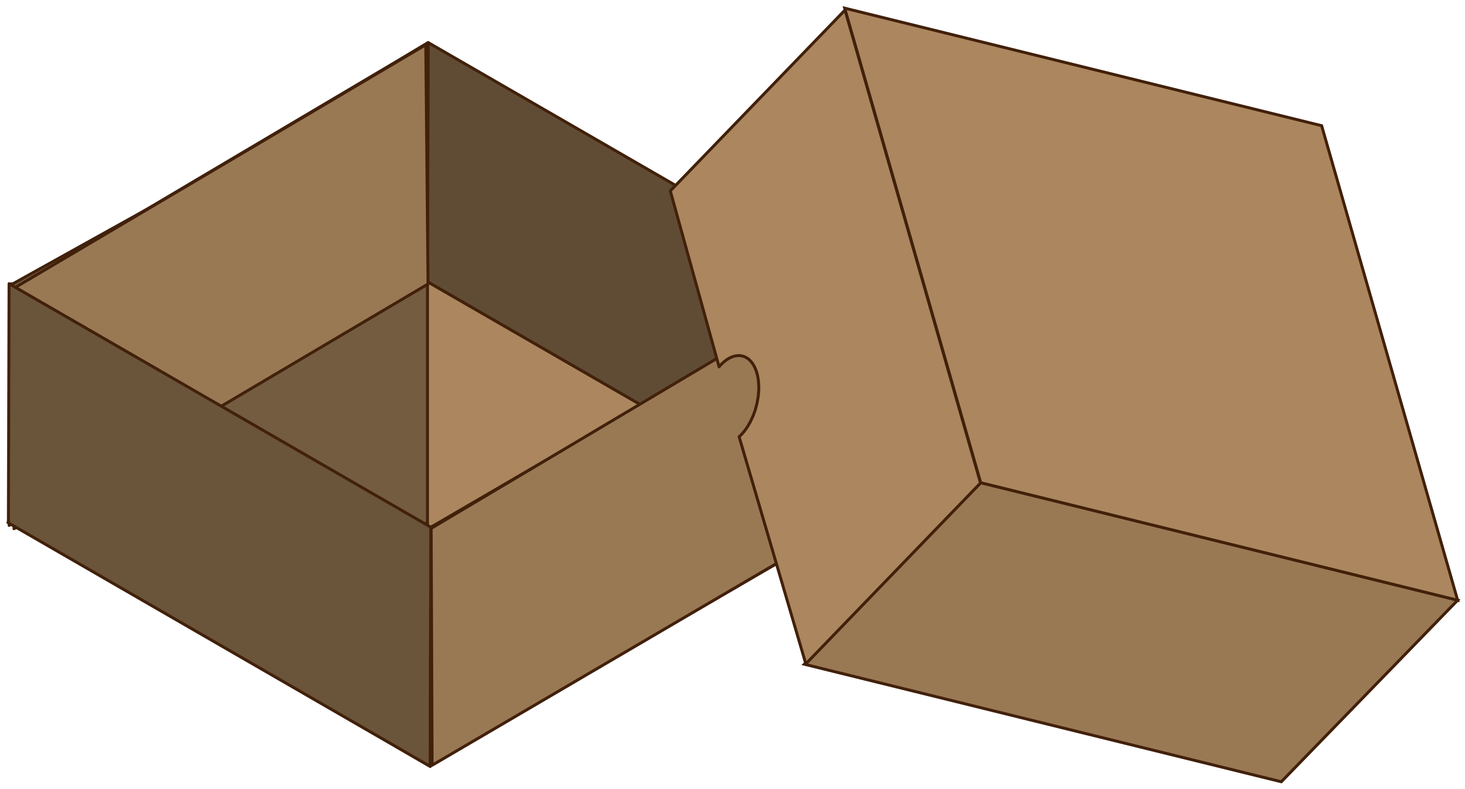

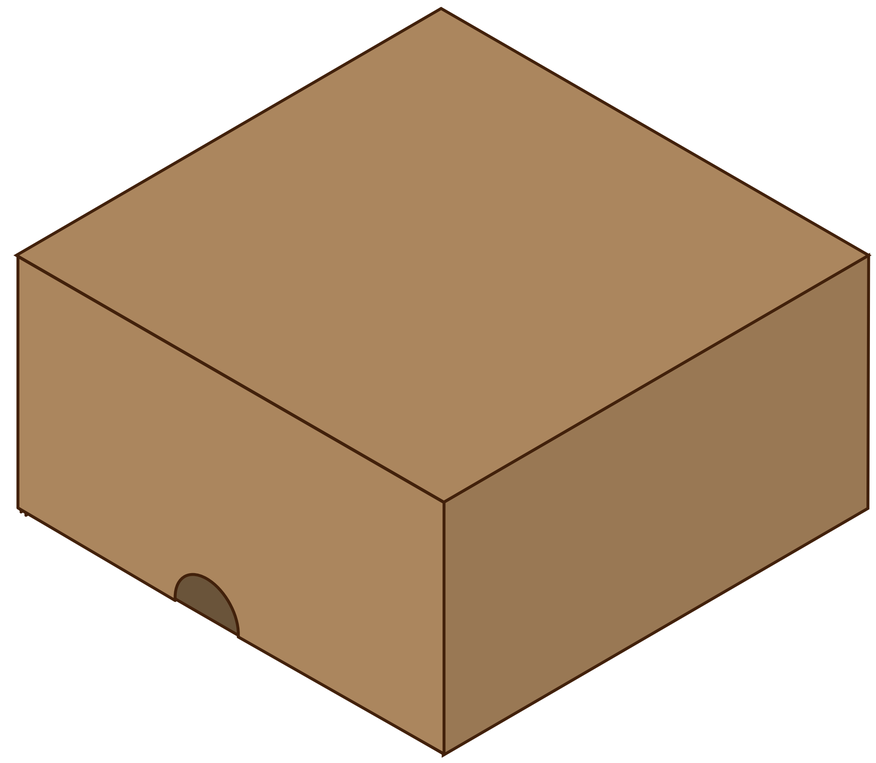

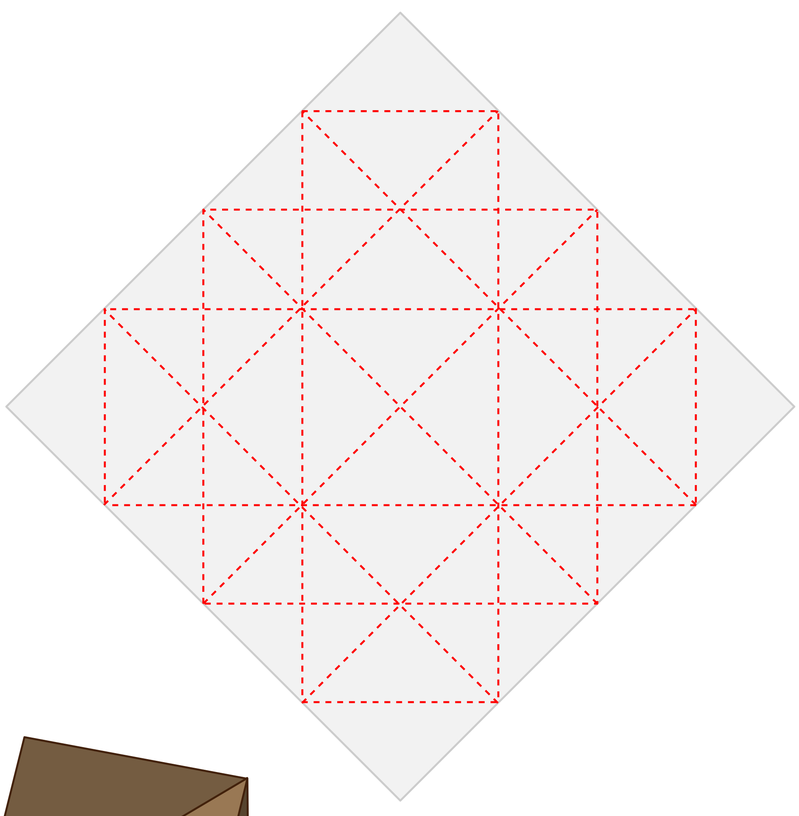

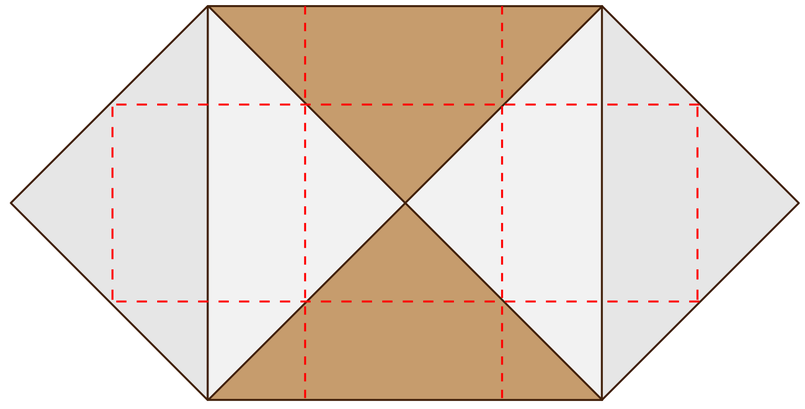

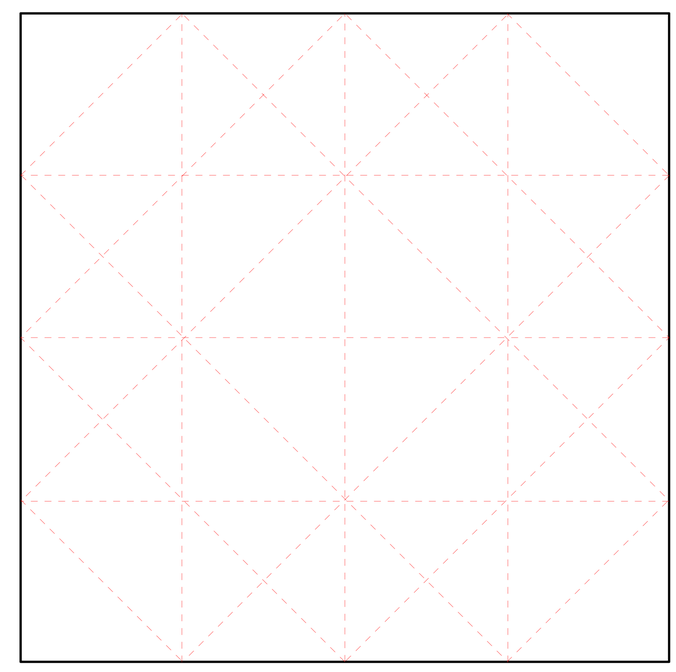

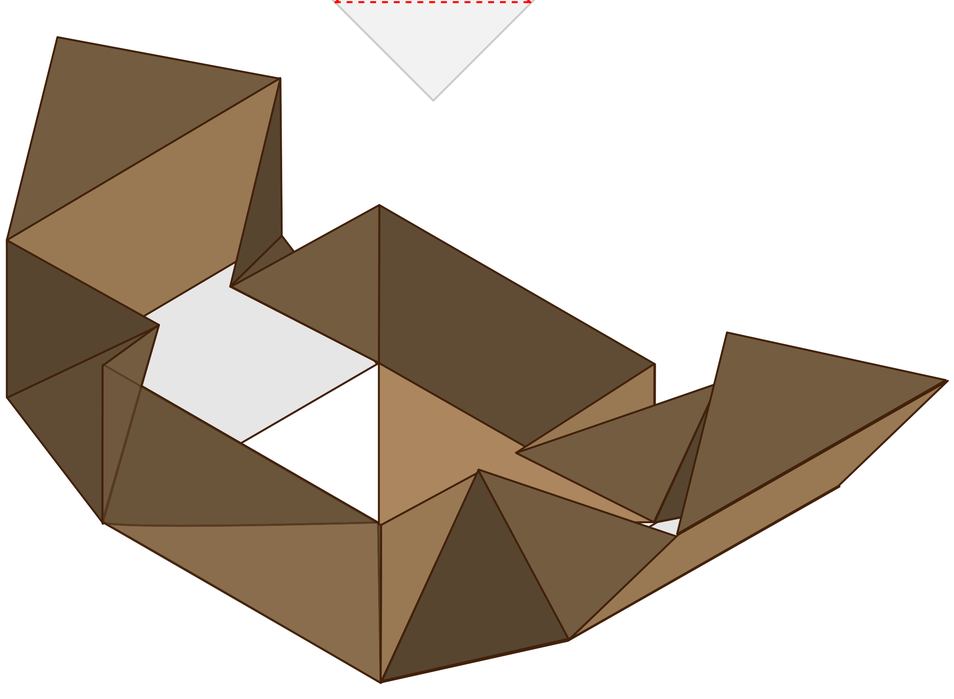

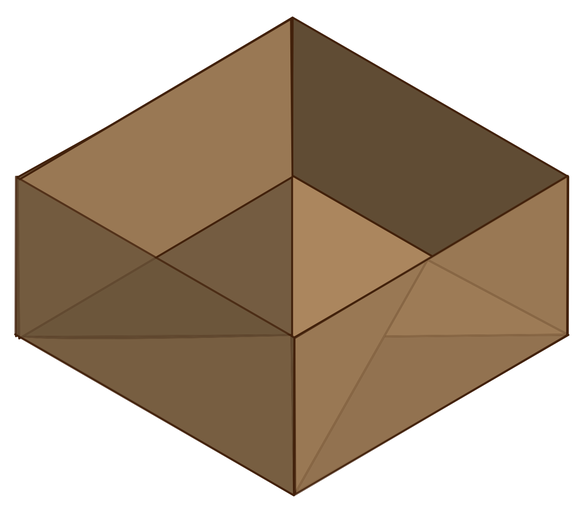

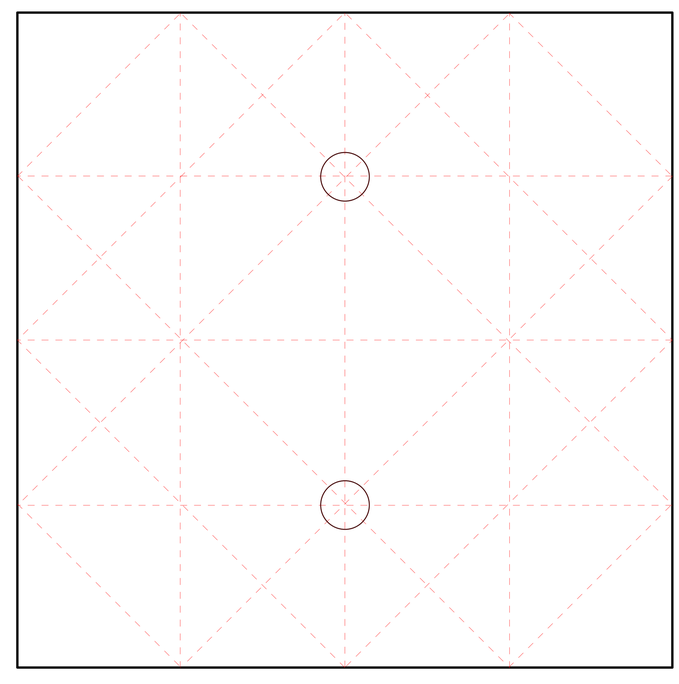

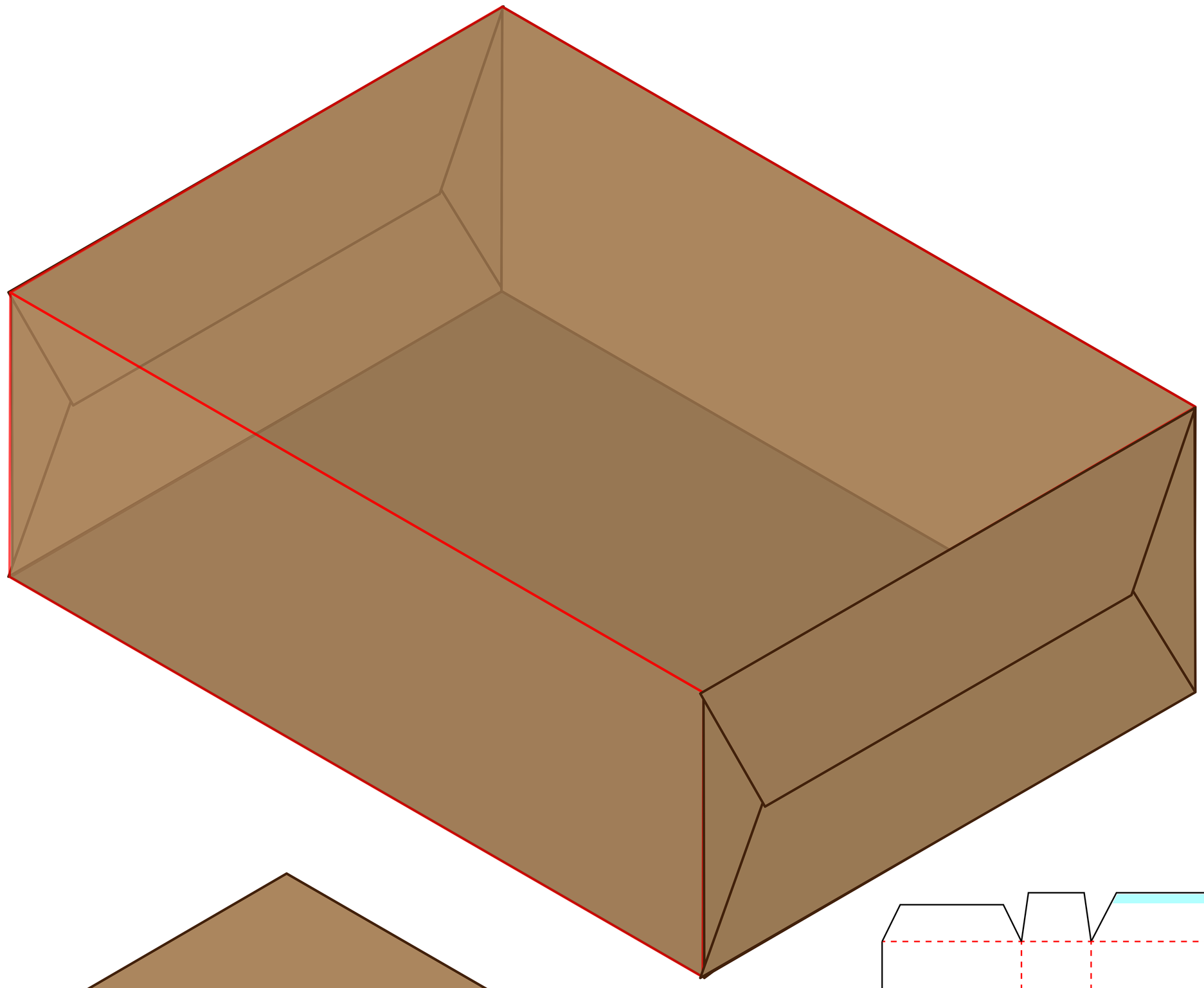

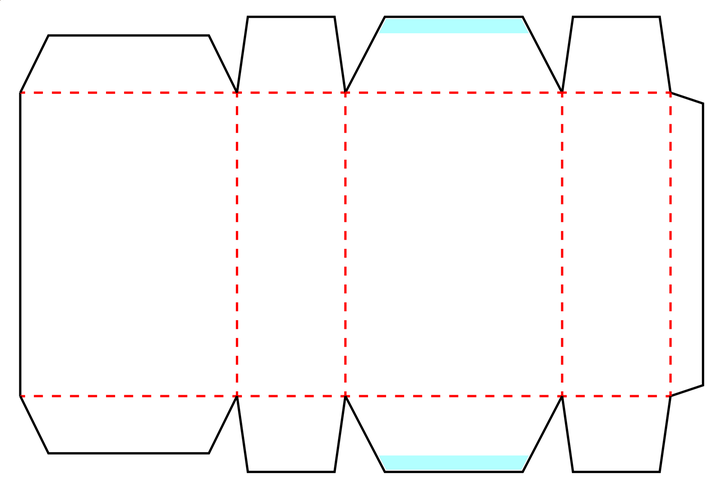

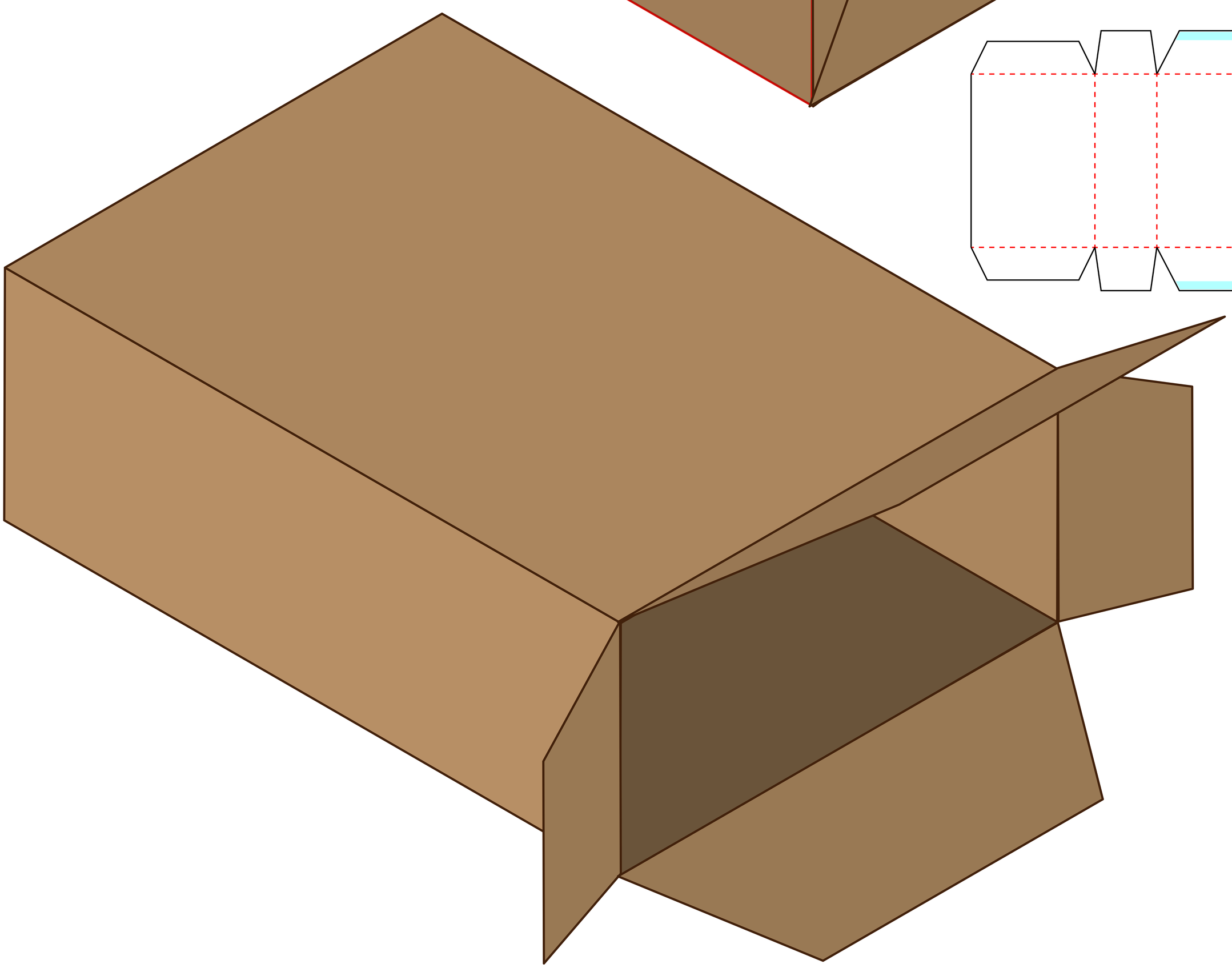

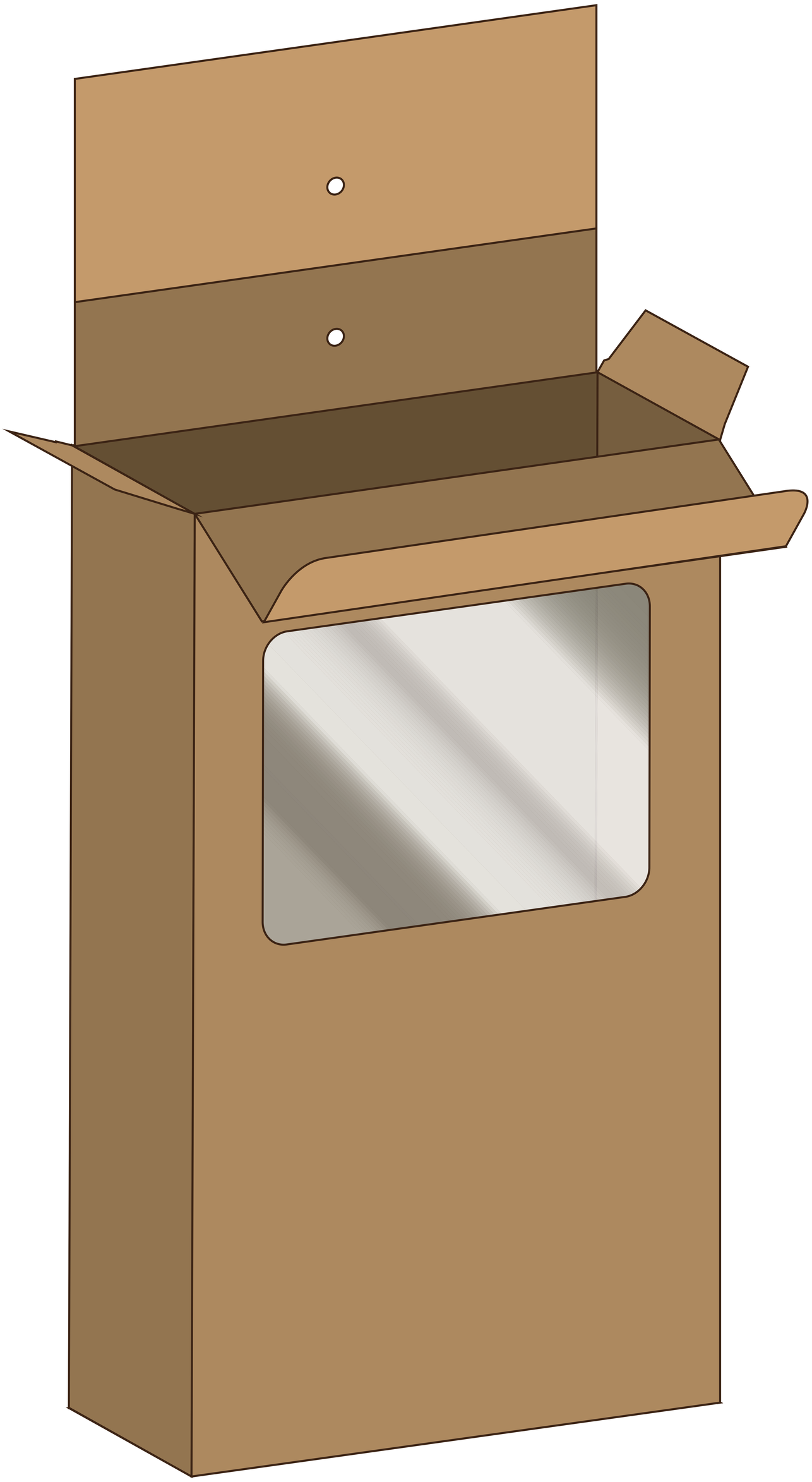

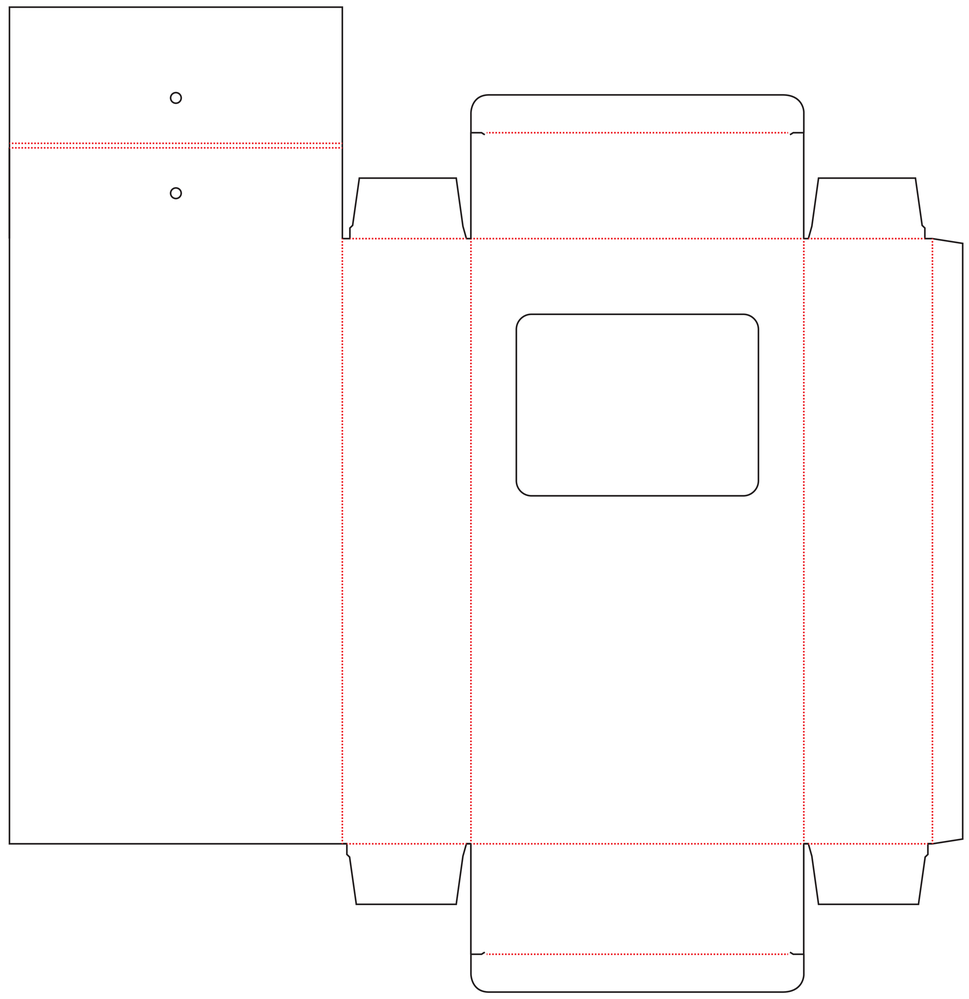

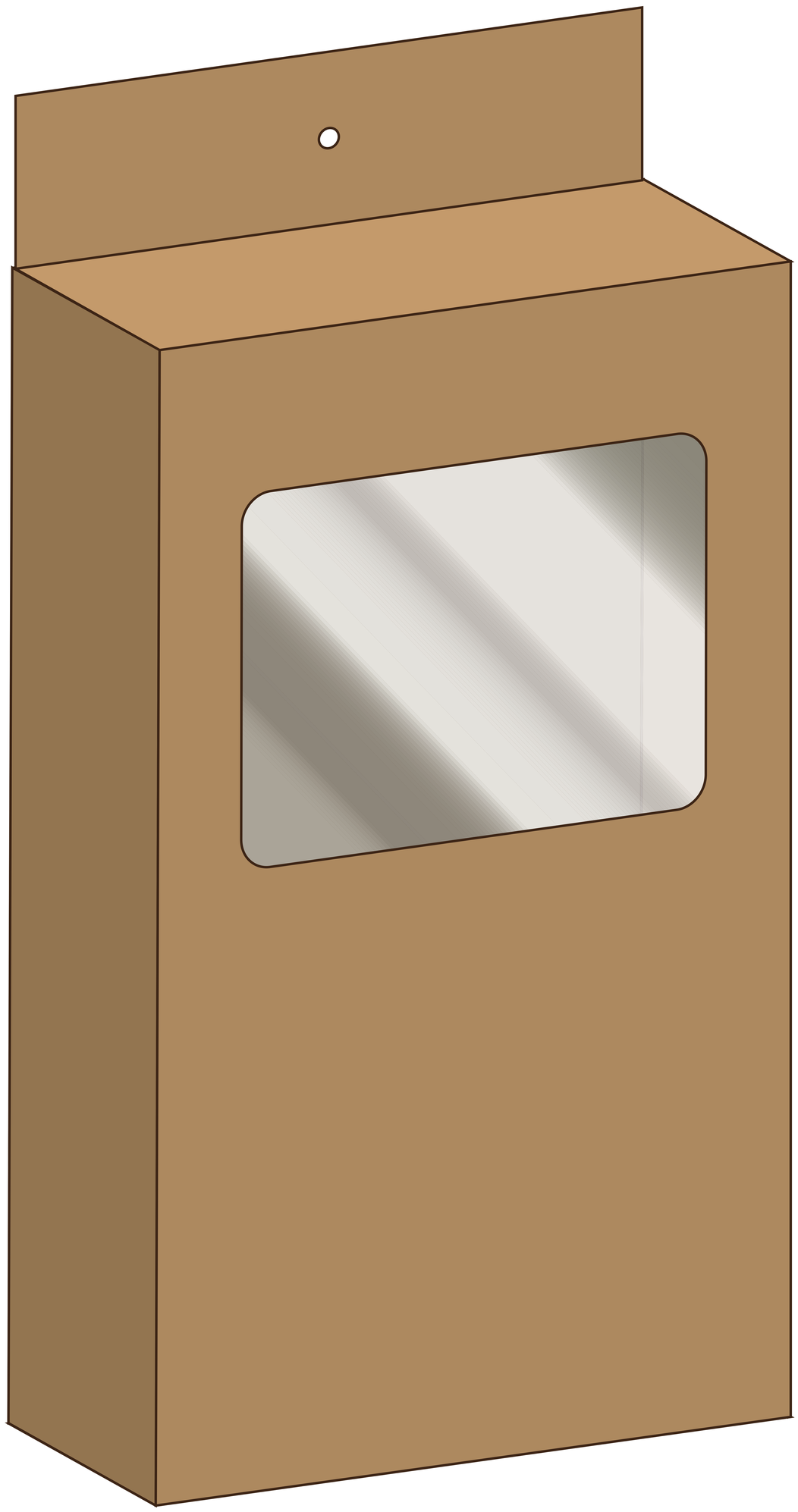

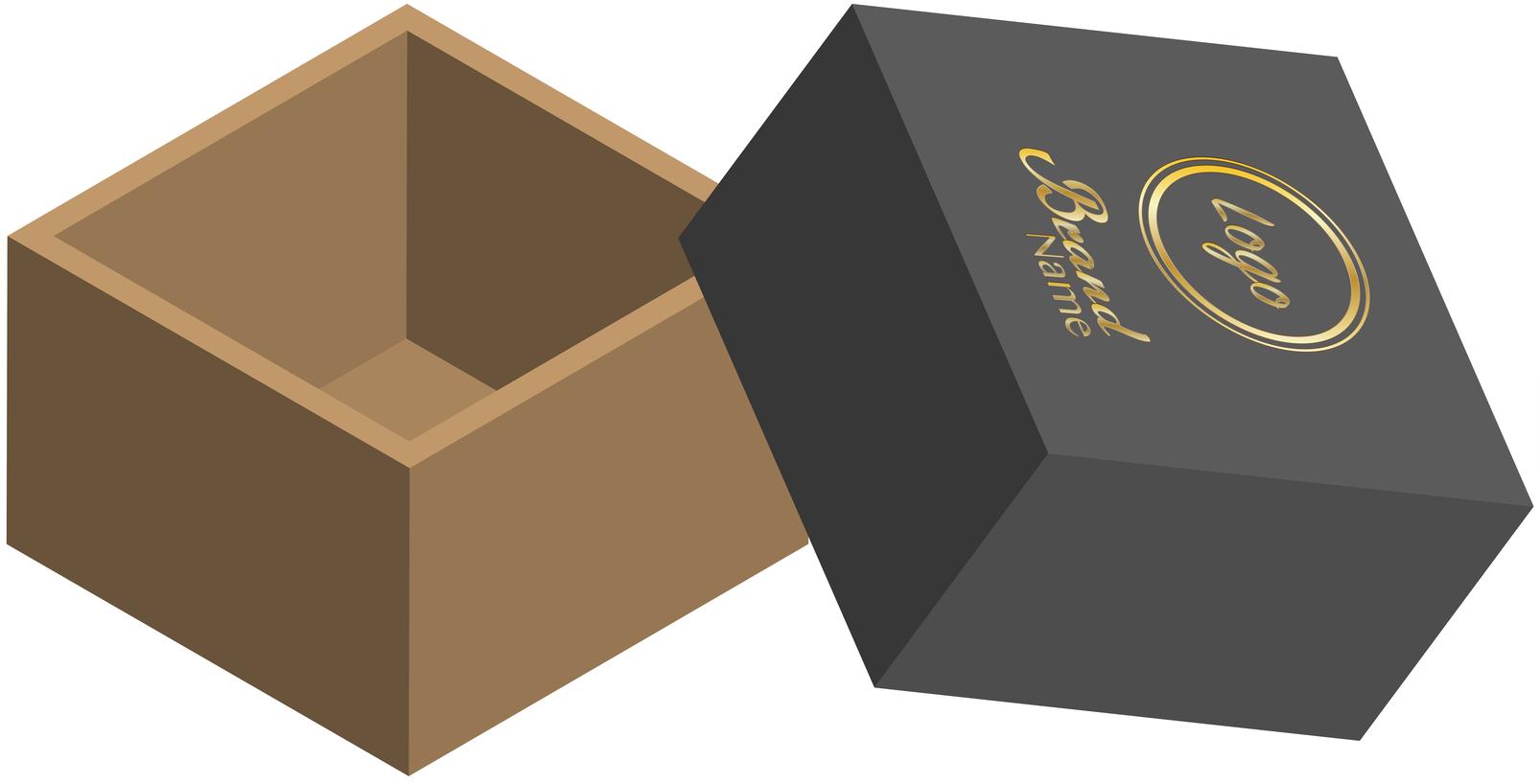
Logo
Brand
Name

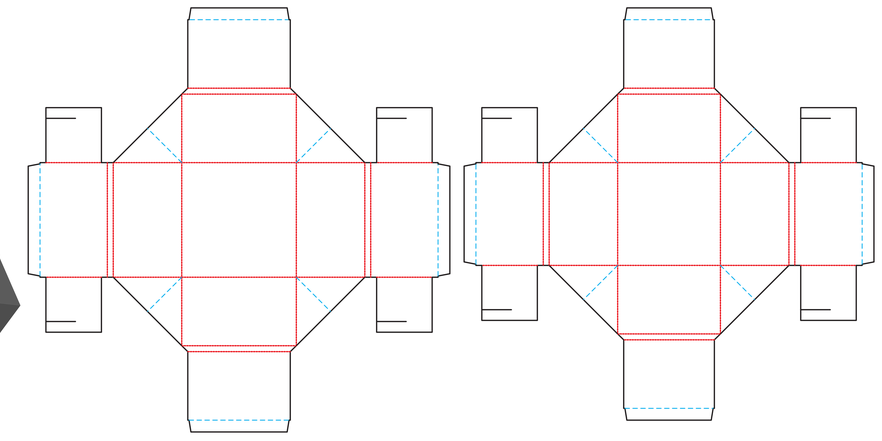

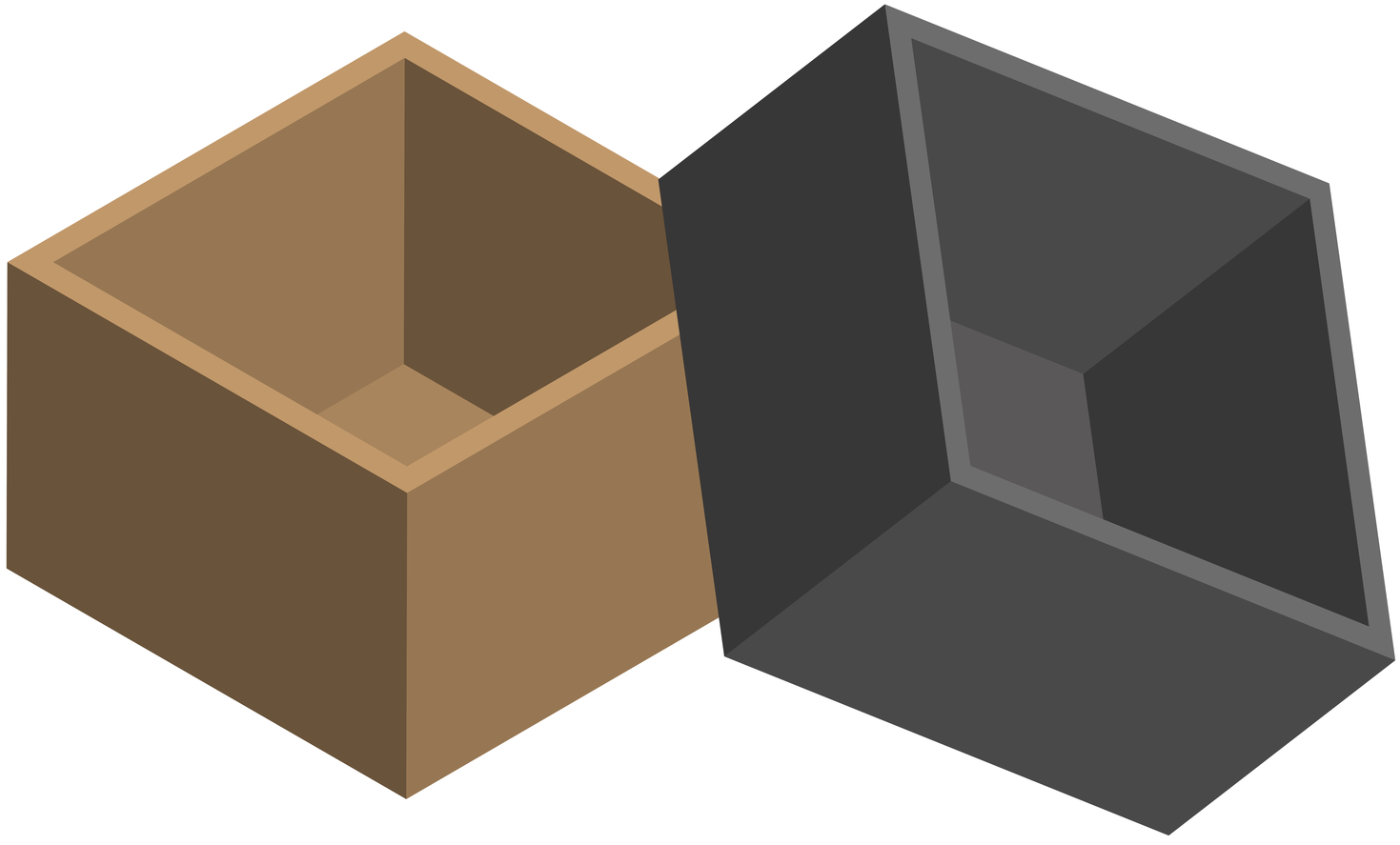

Logo
Brand
Name

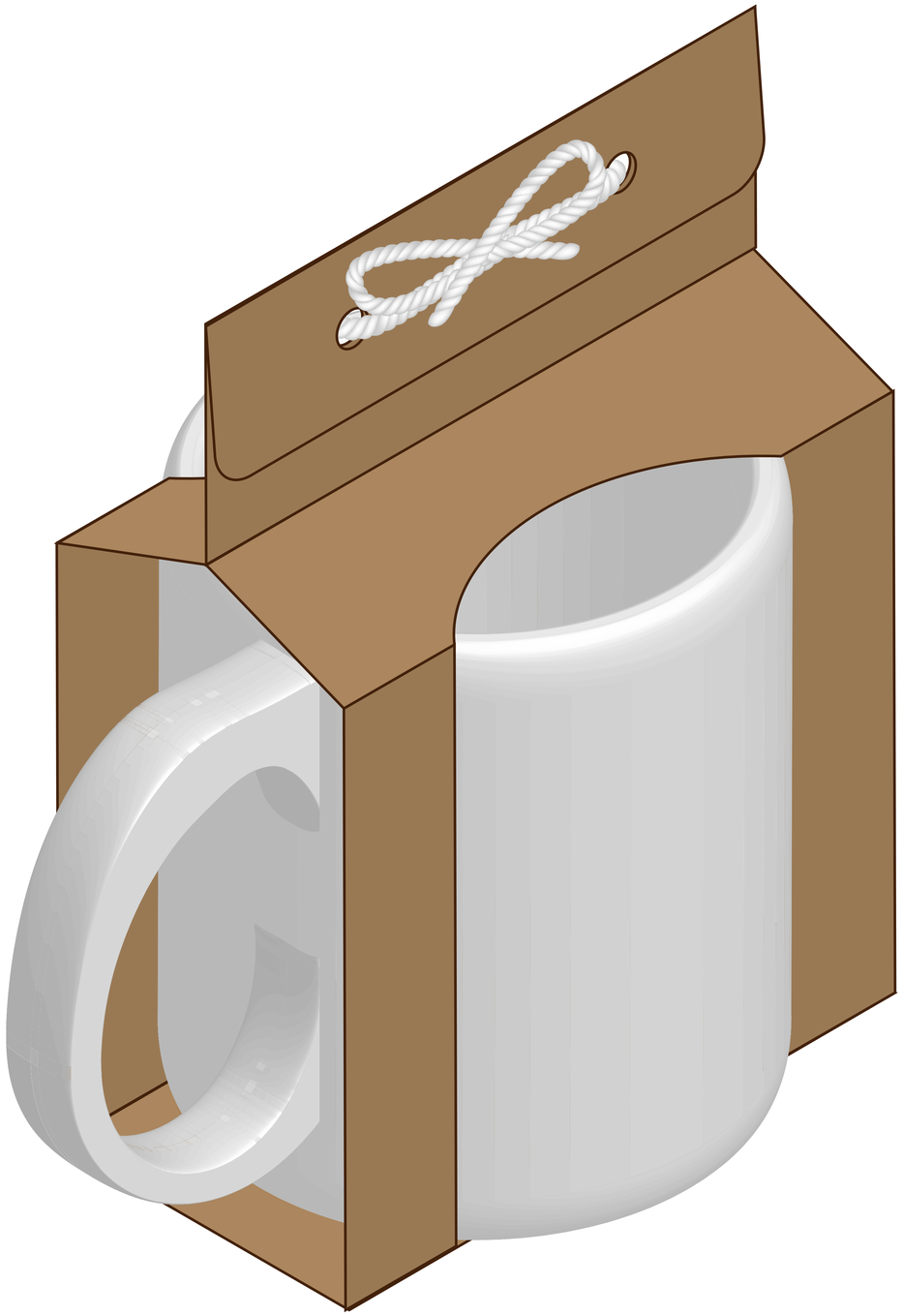

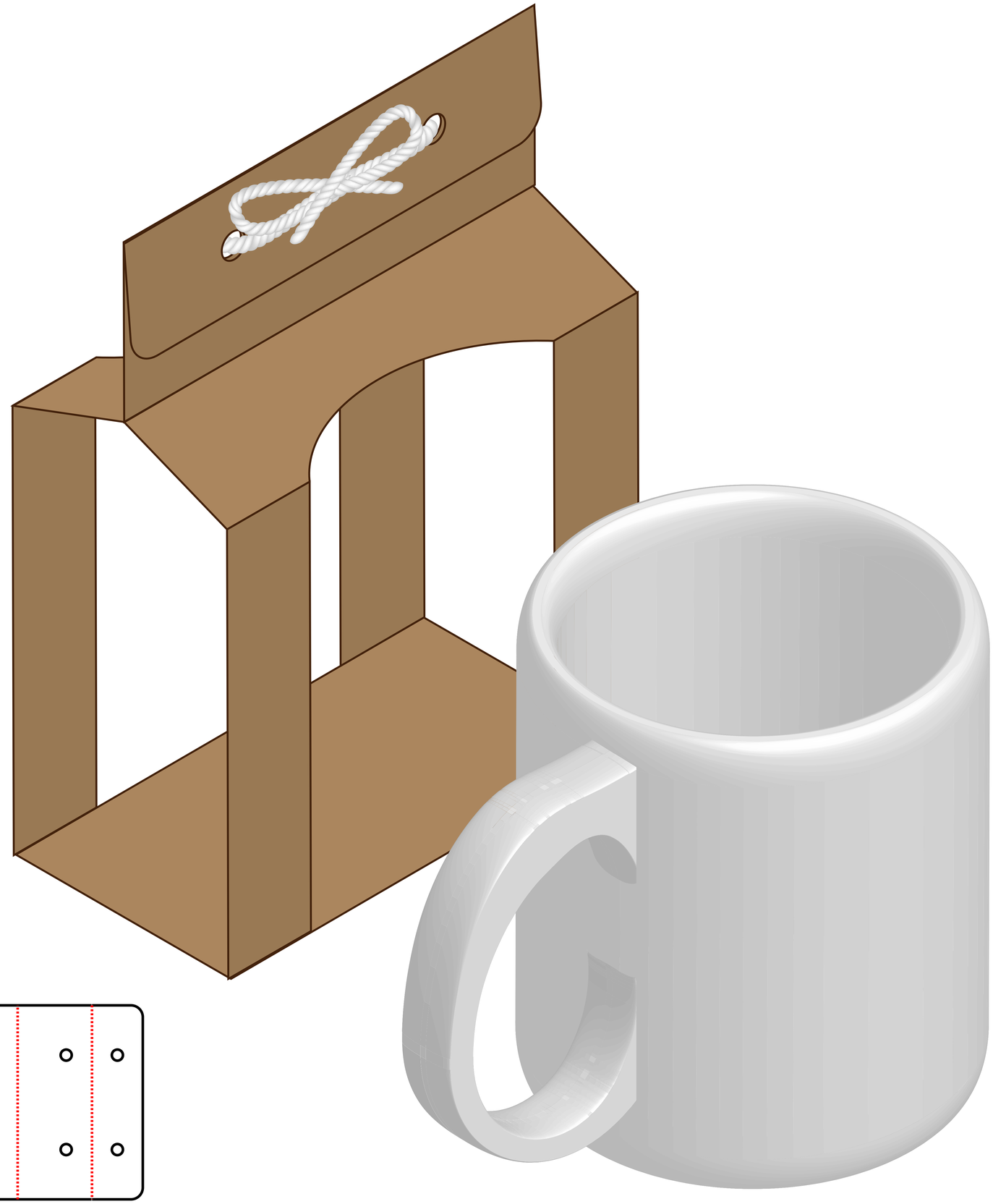

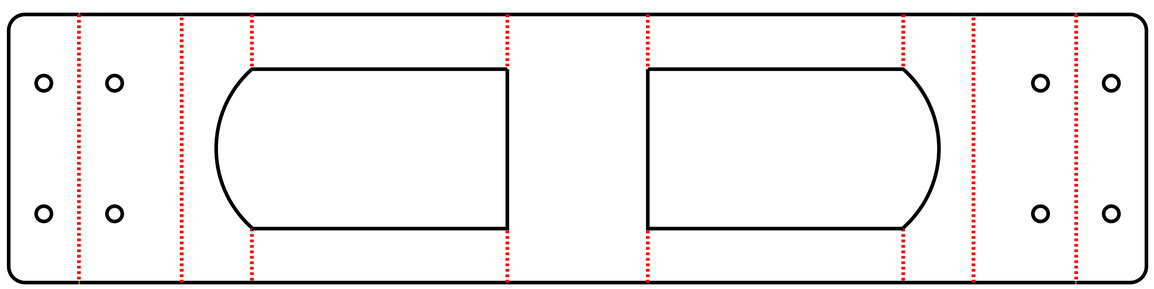

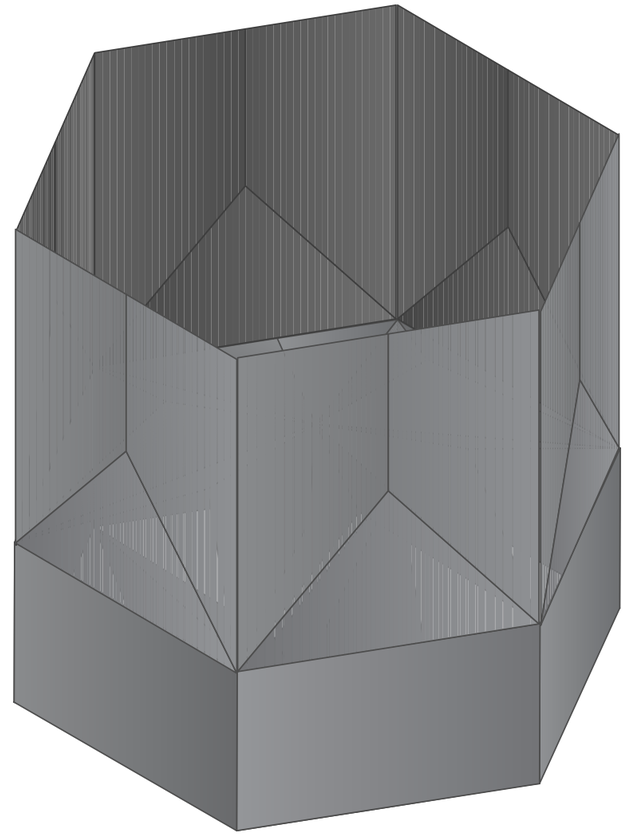

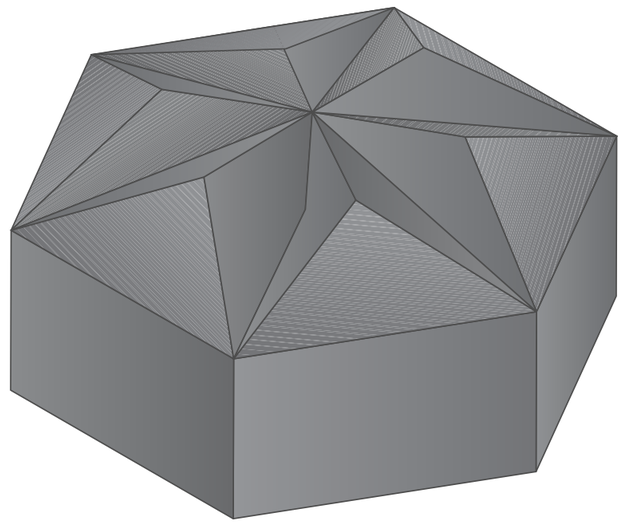

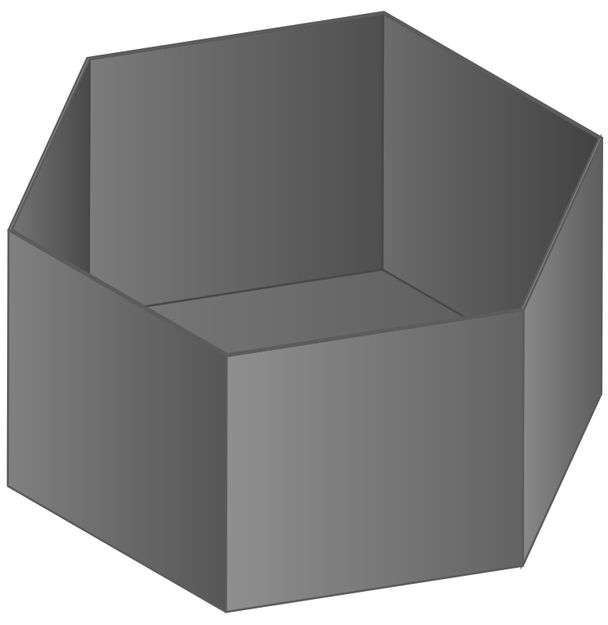

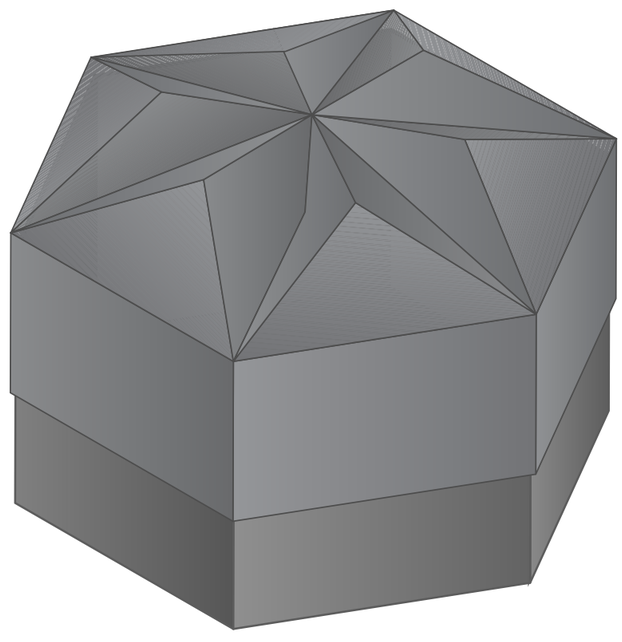

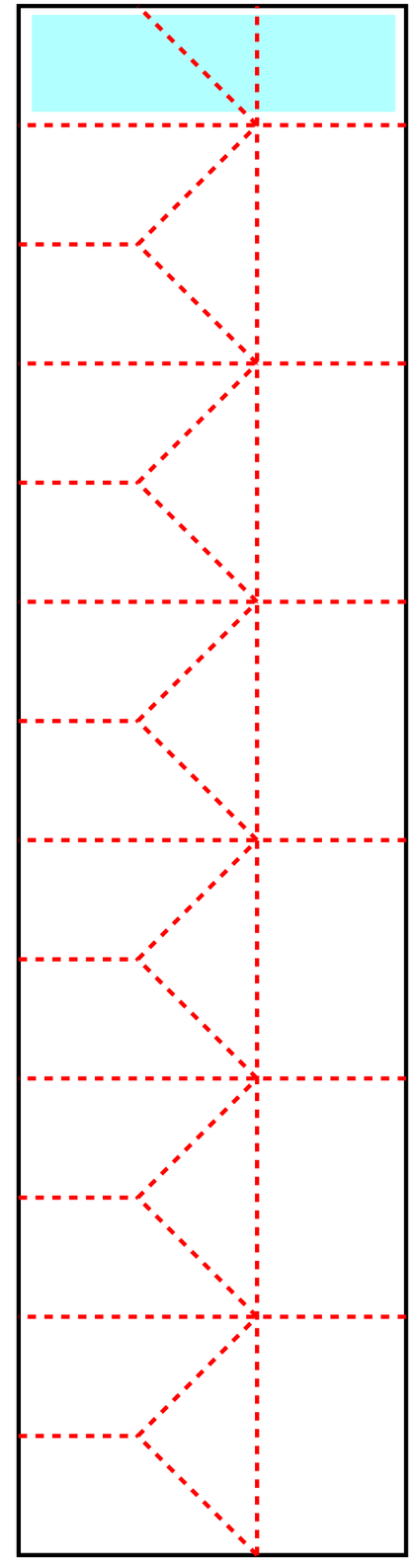

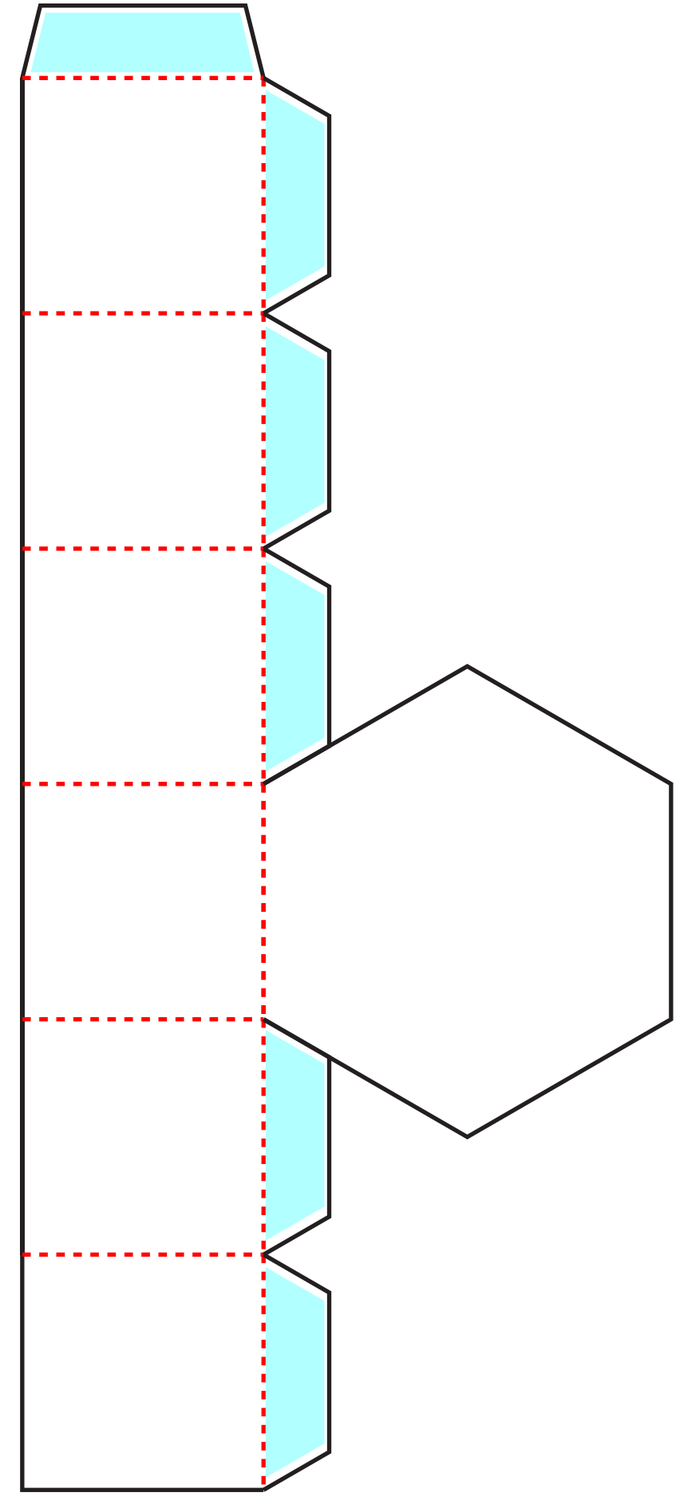

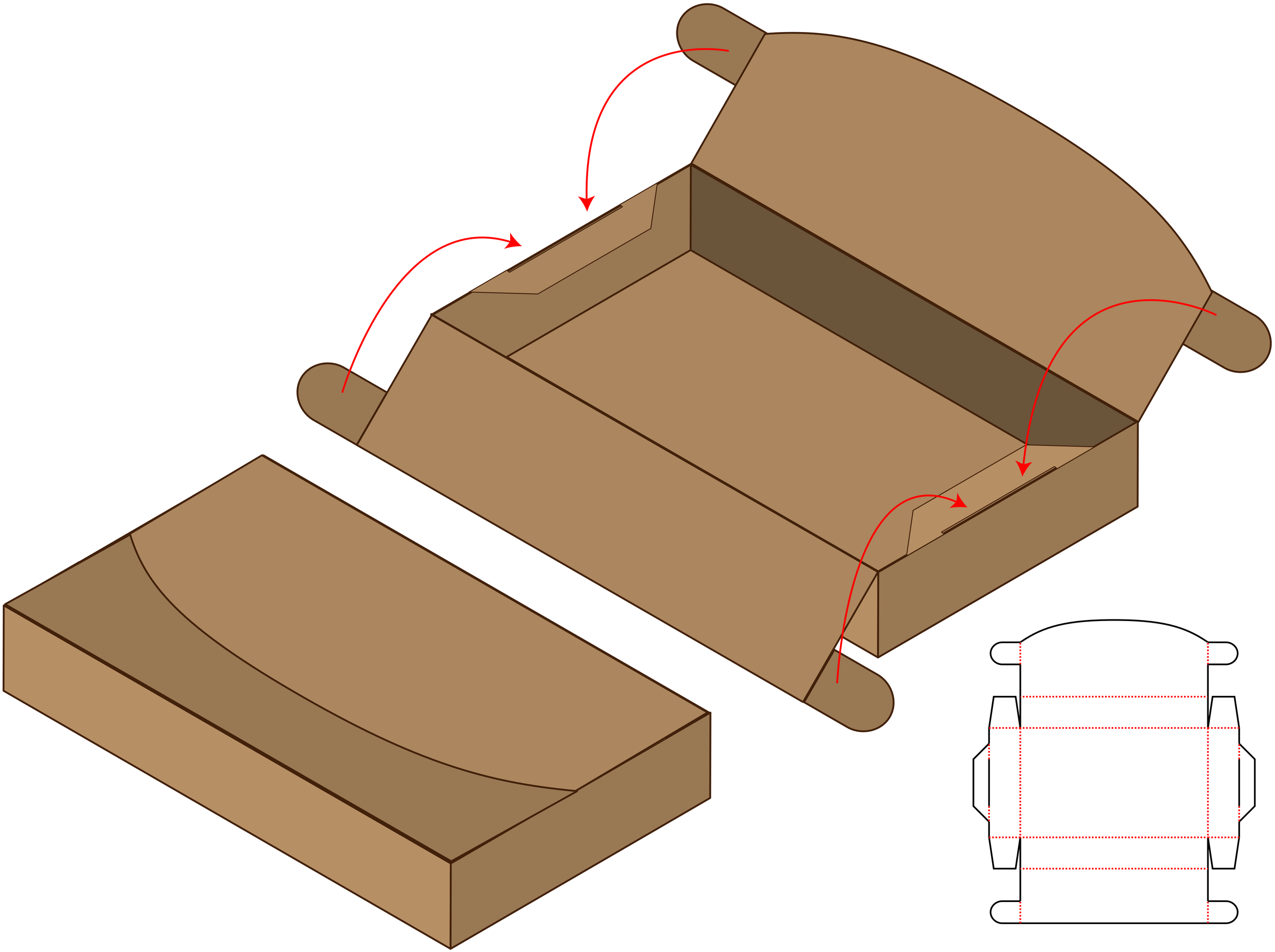

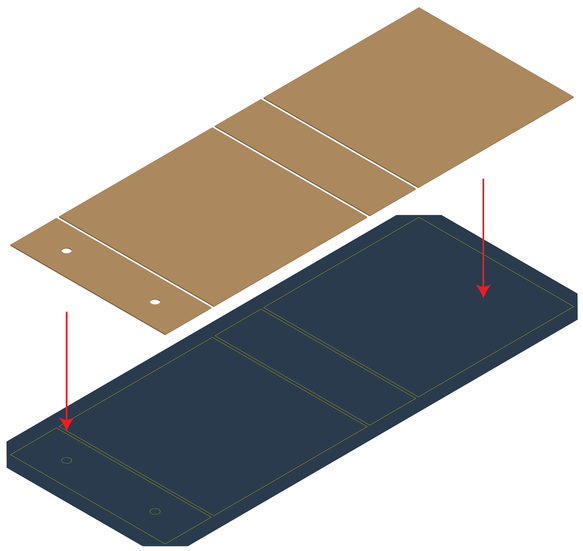

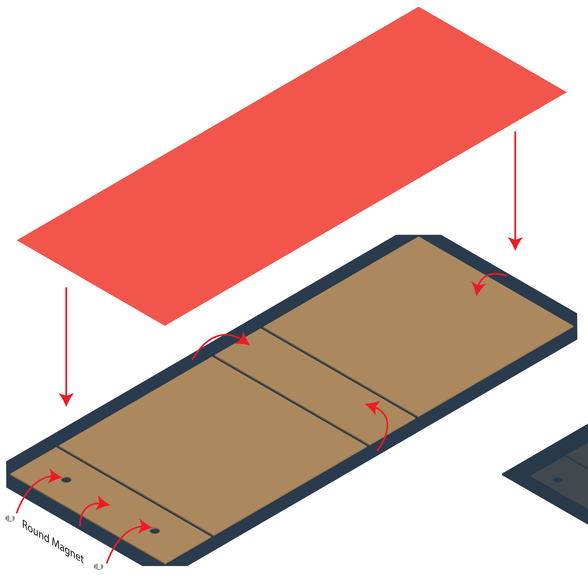
Round Magnet

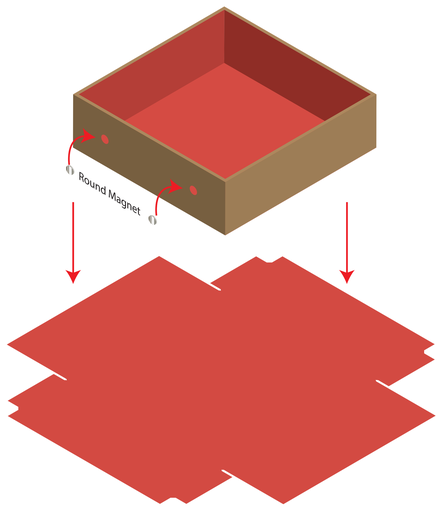
Round Magnet

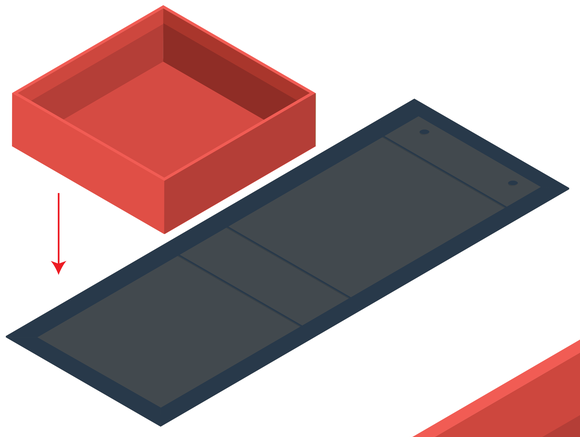

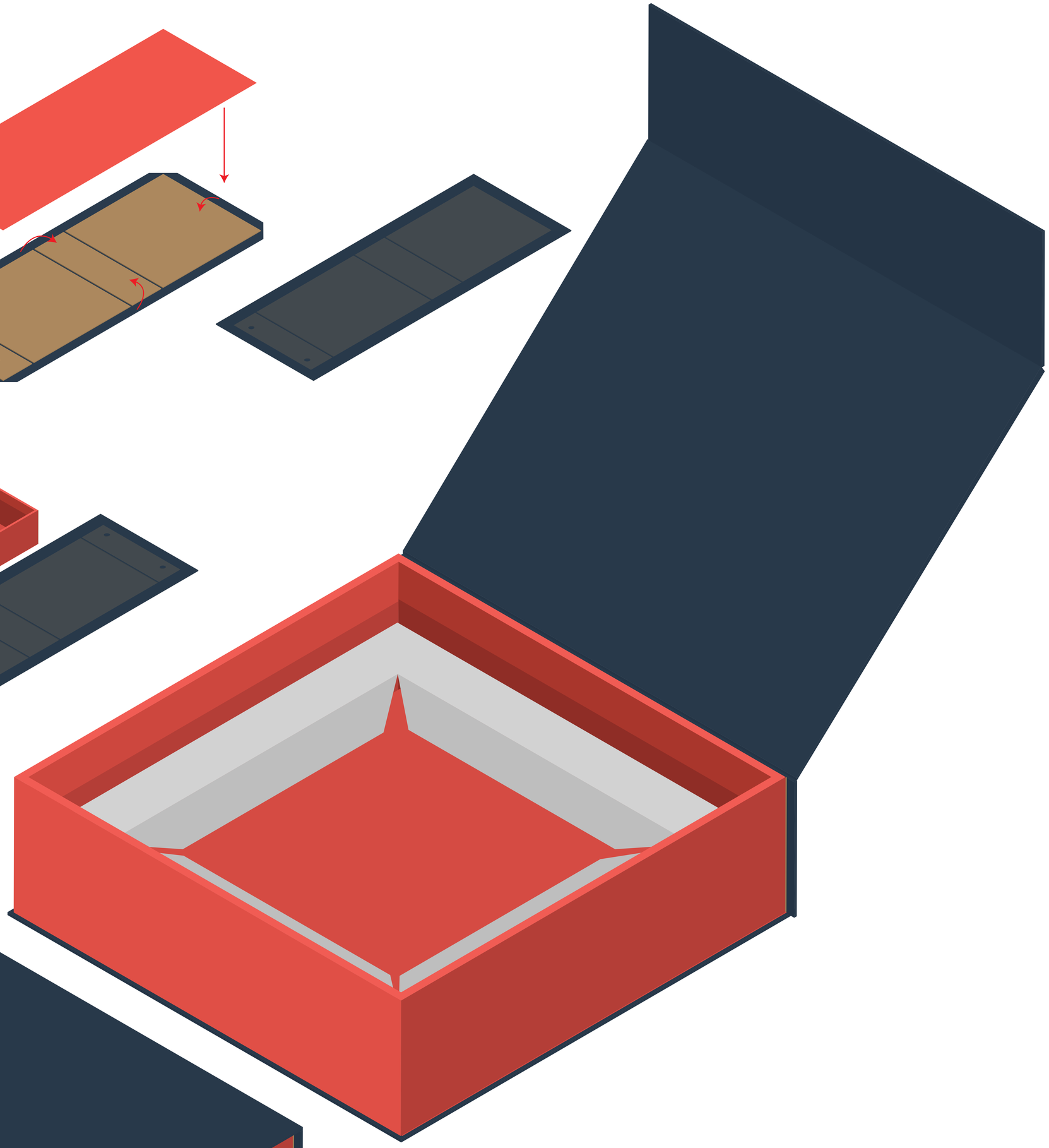

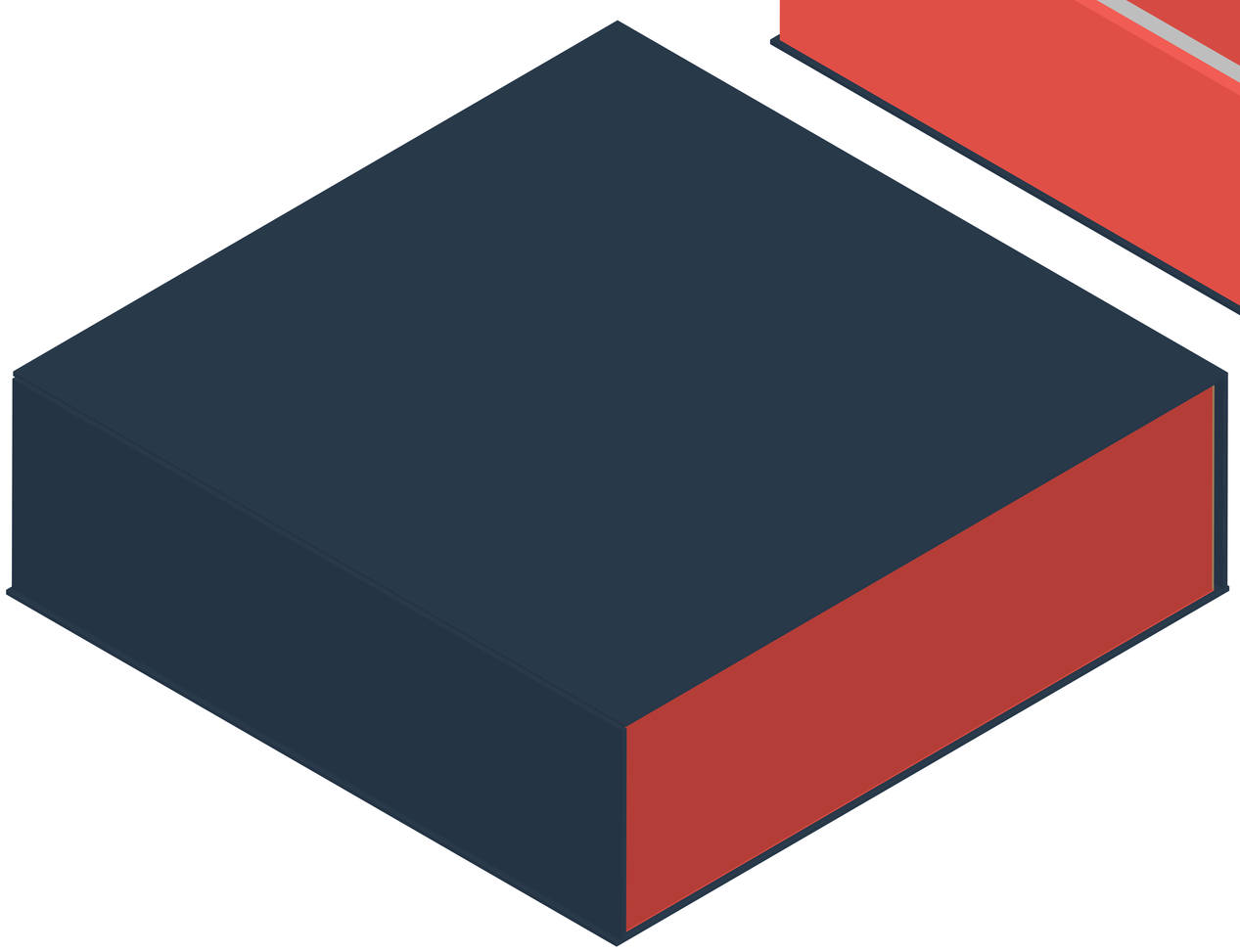

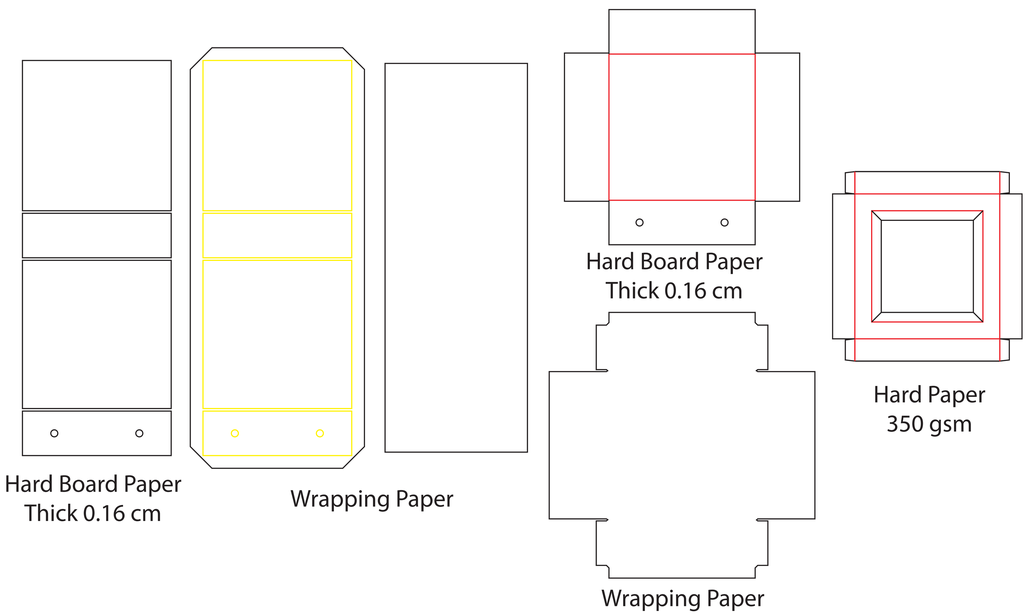
Hard Board Paper
Thick 0.16 cm
Wrapping Paper
Hard Board Paper
Thick 0.16 cm
Hard Paper
350 gsm
Wrapping Paper

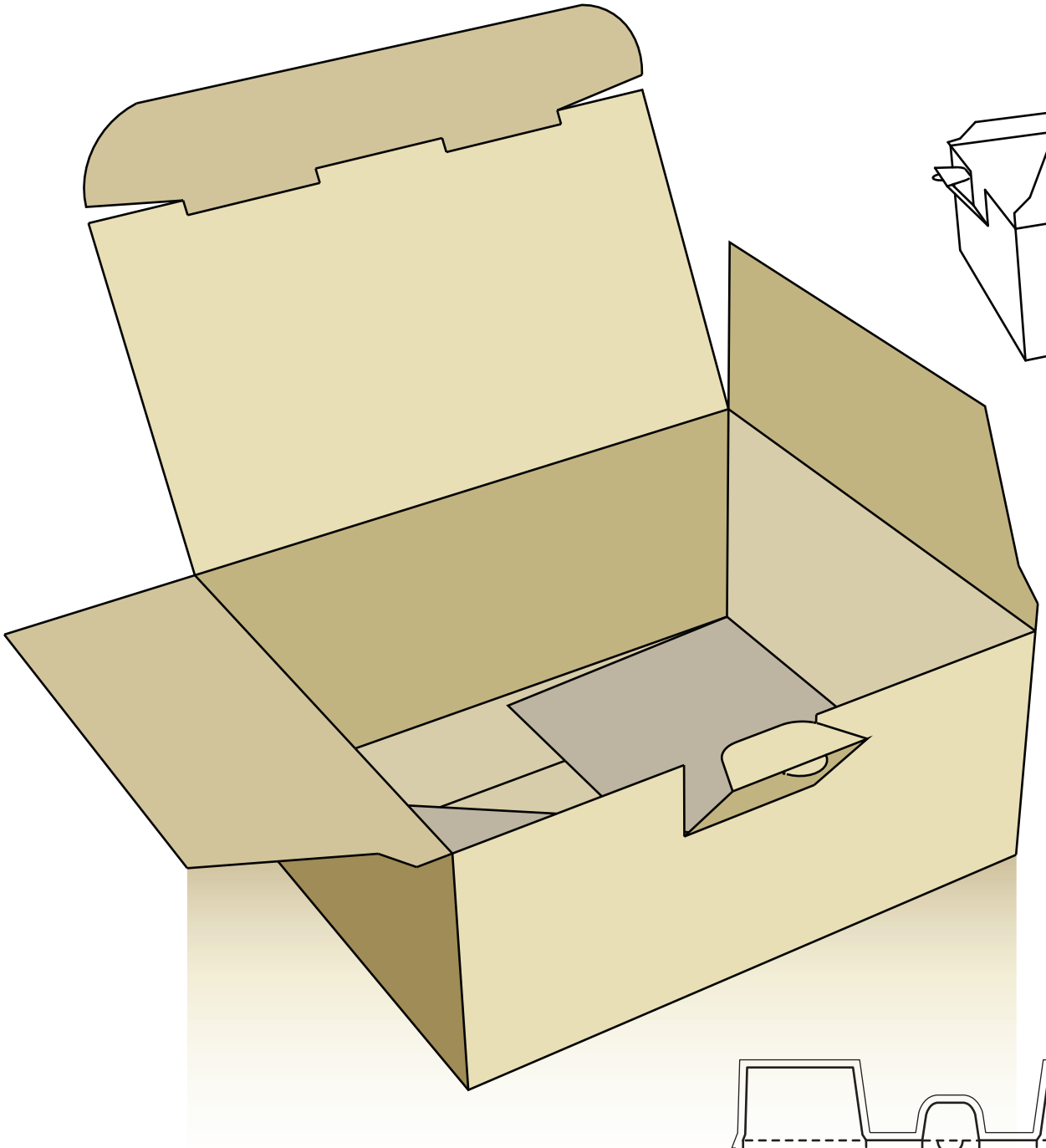

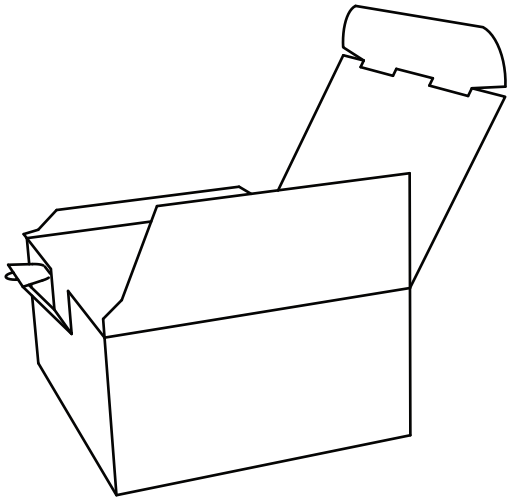

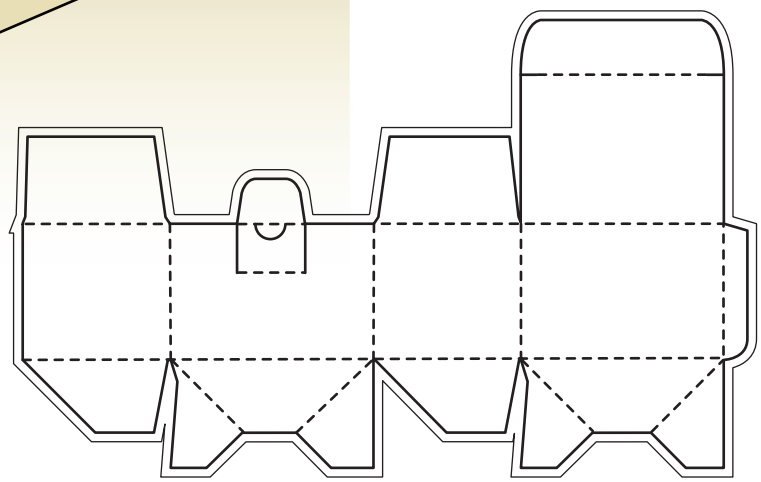

printing bleed

die-cuting line

folding line

perforaion line

zipper line

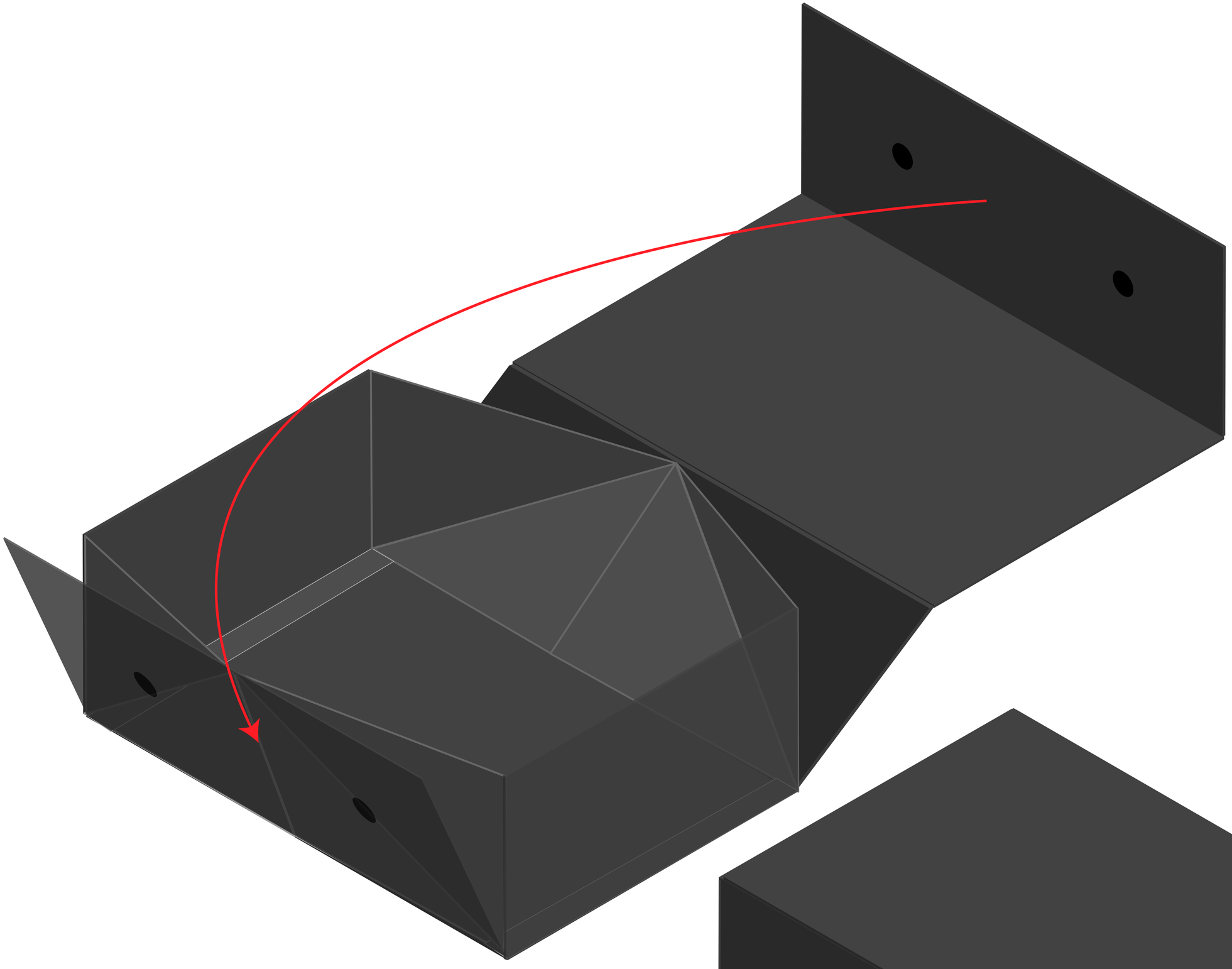

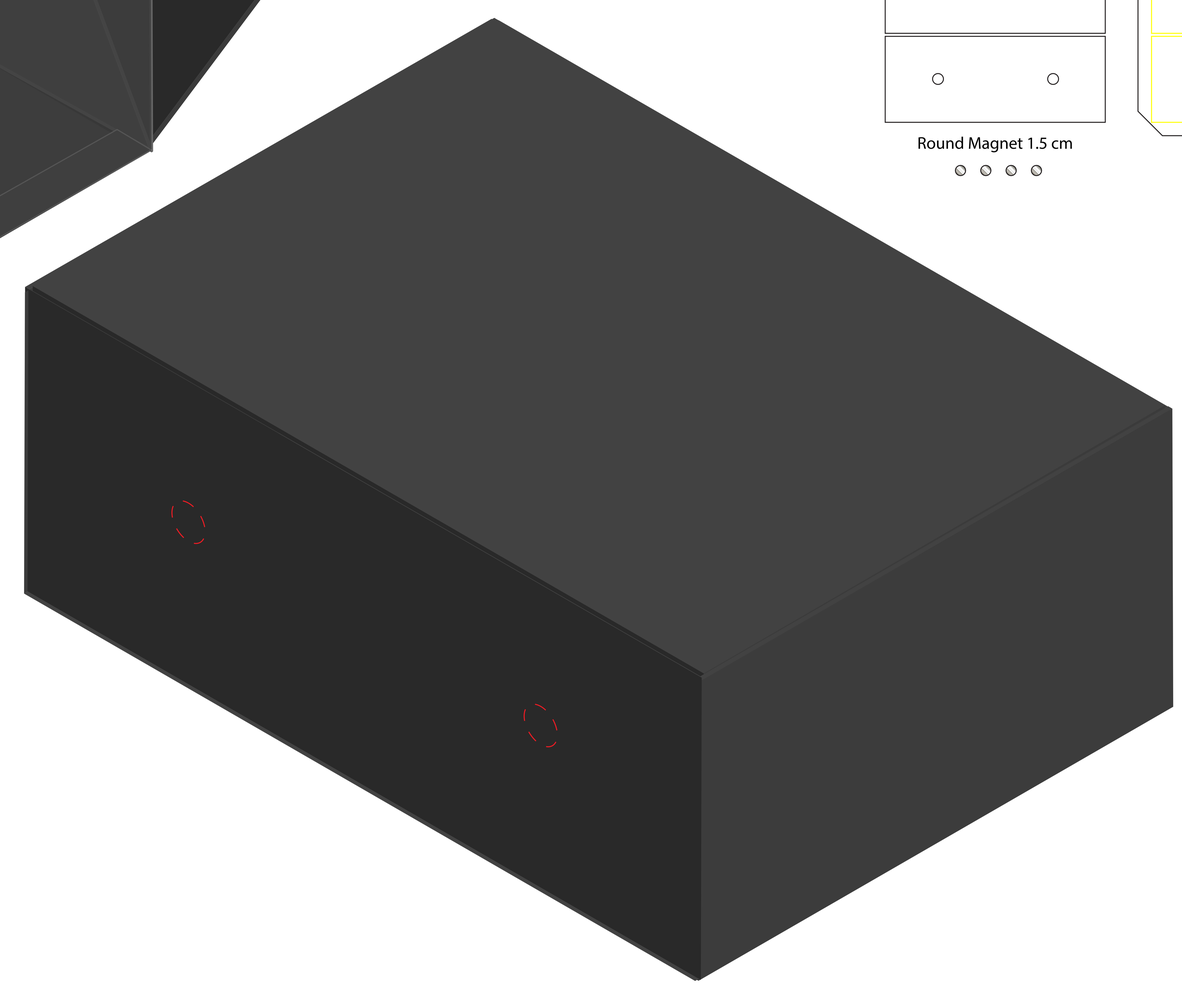

Hard Board Paper
Thick 0.2 cm

Wrapping Paper

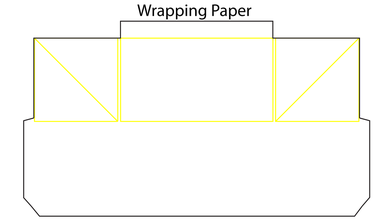

Hard Board Paper
Thick 0.2 cm

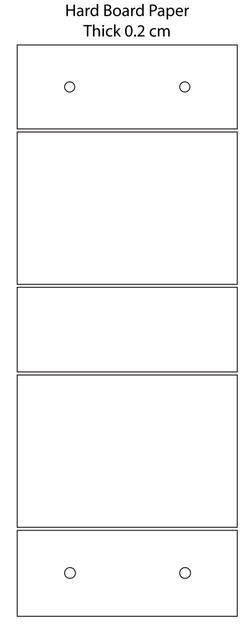

Wrapping Paper

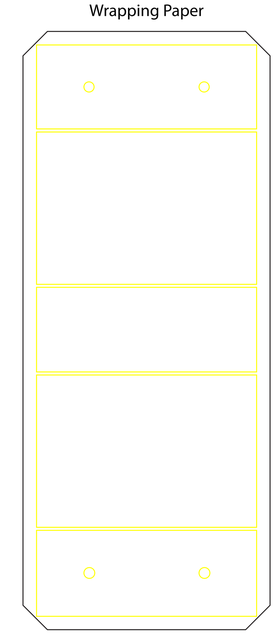

Round Magnet 1.5 cm

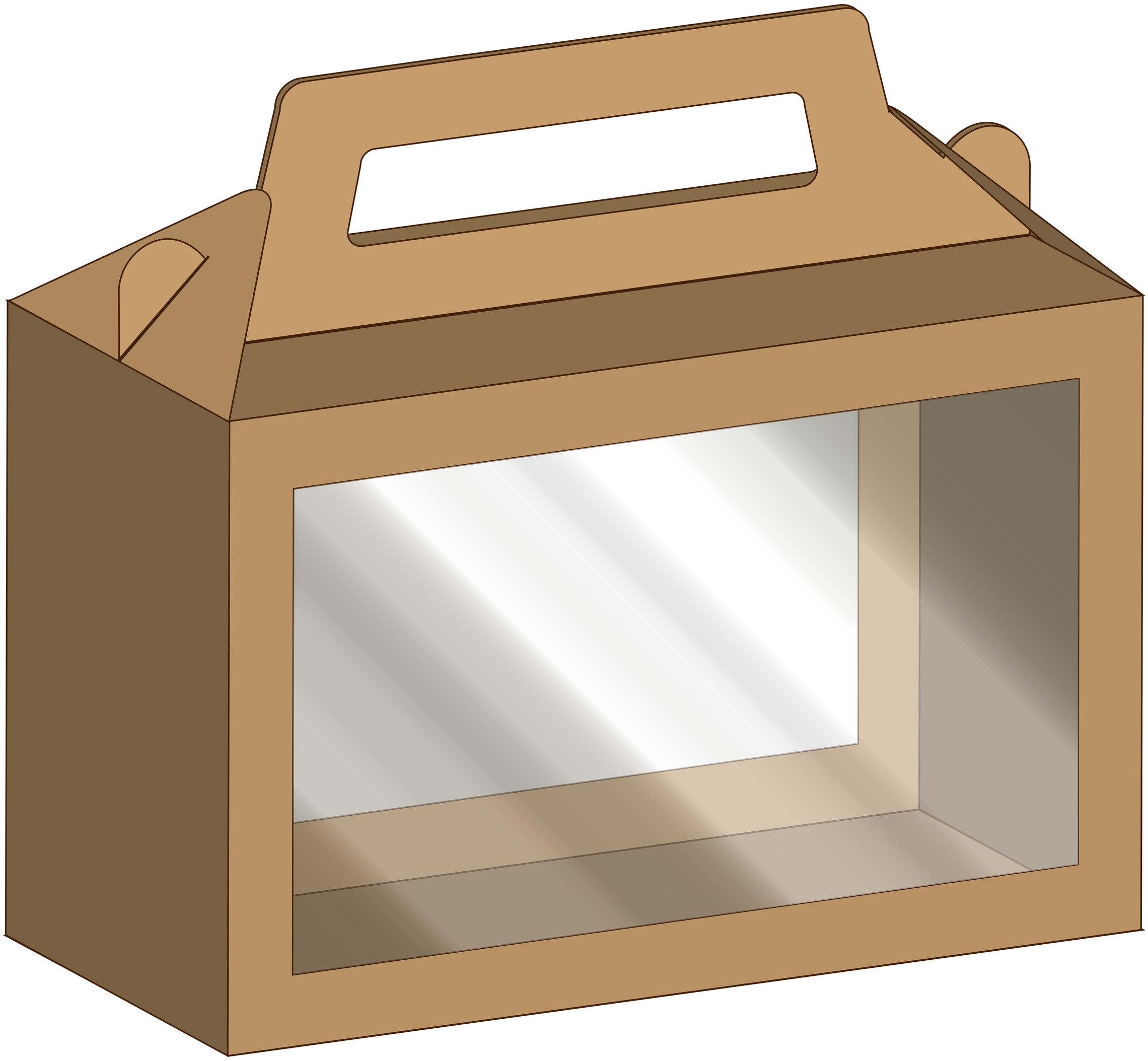

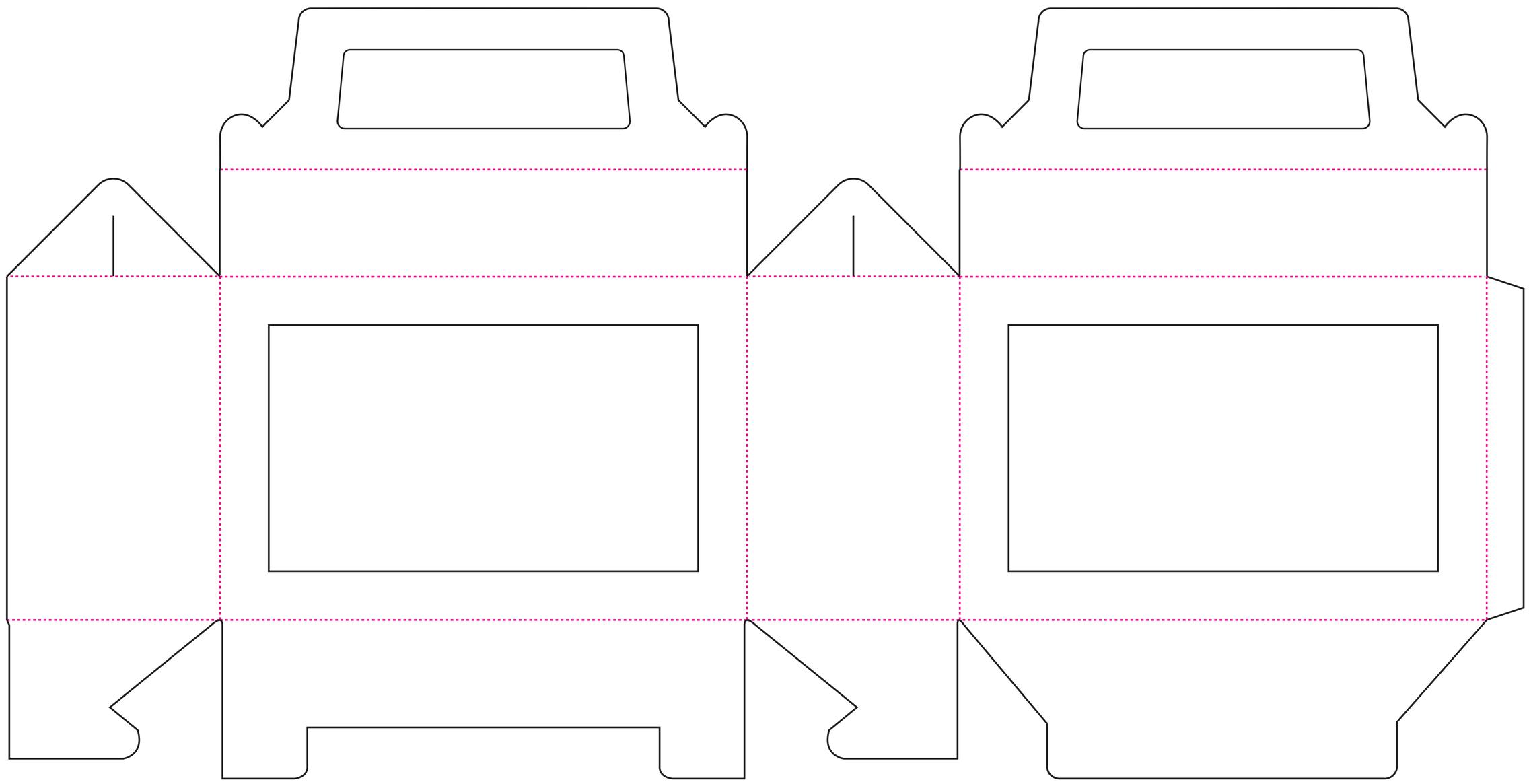

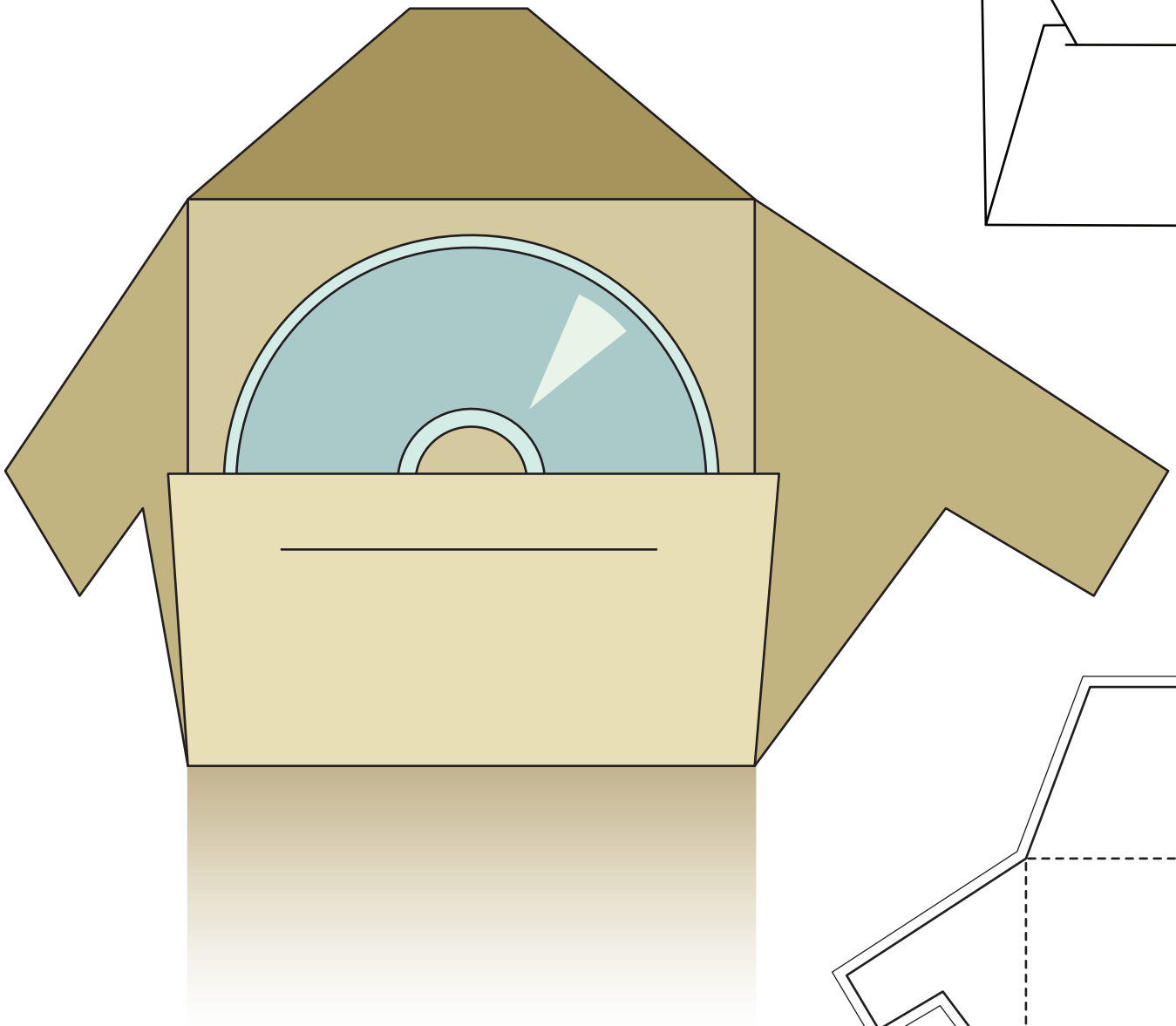

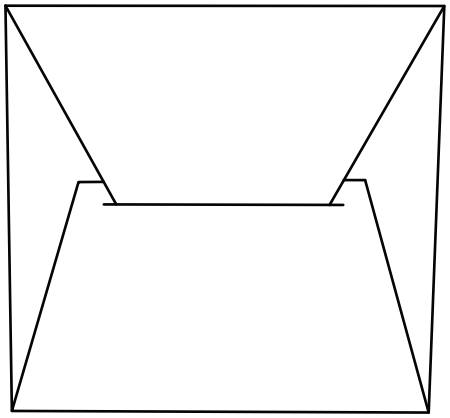

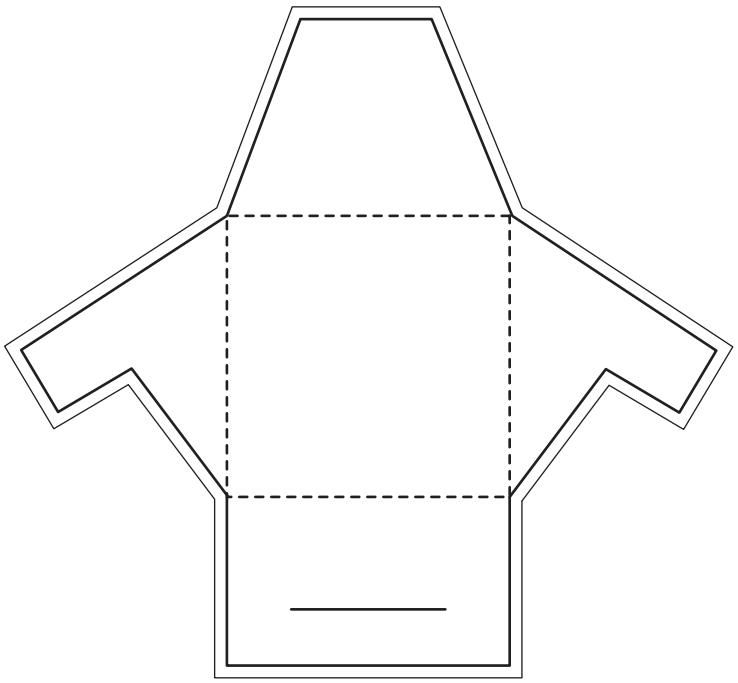

printing bleed

die-cuting line

folding line

perforaion line

zipper line

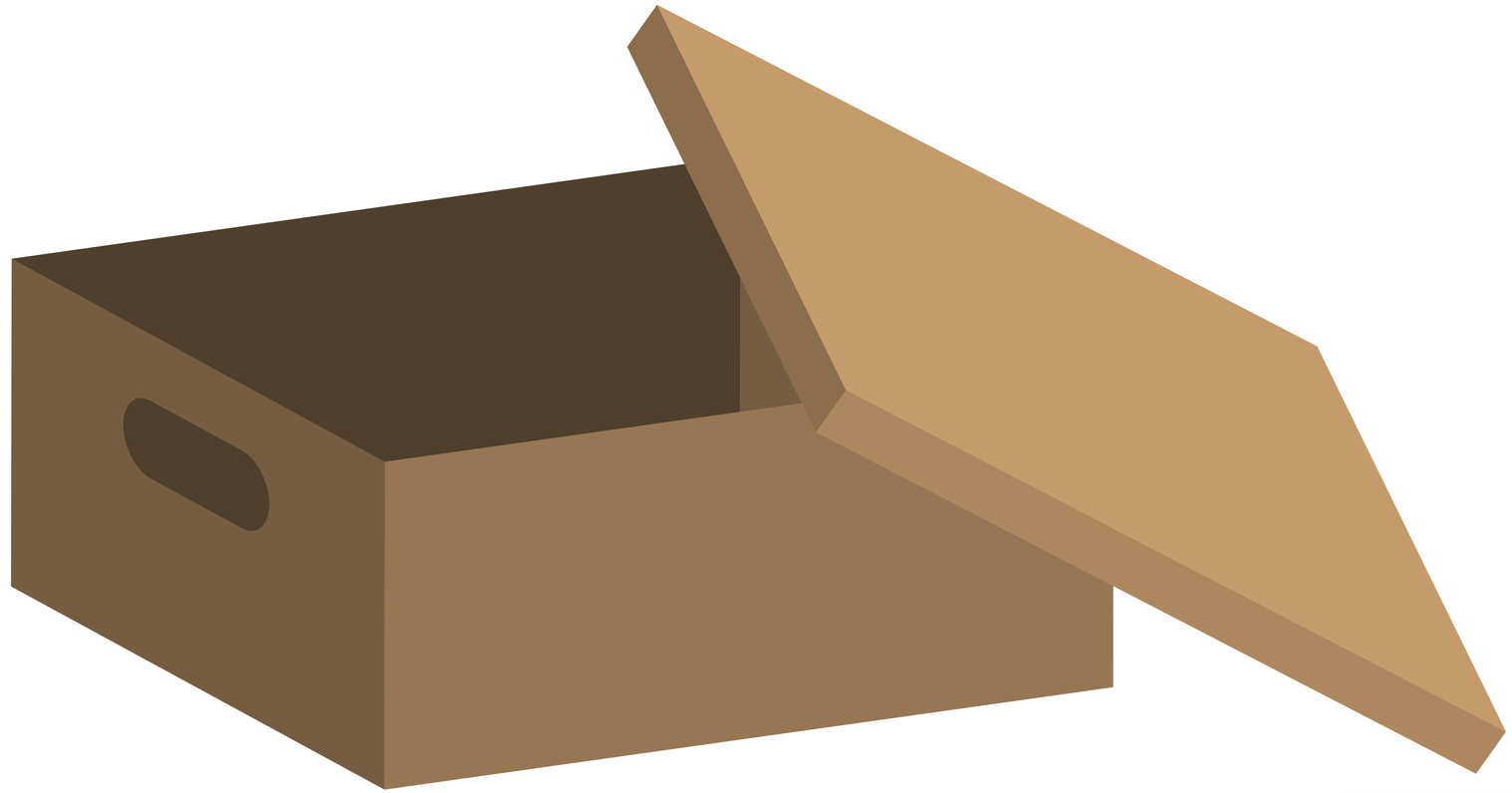

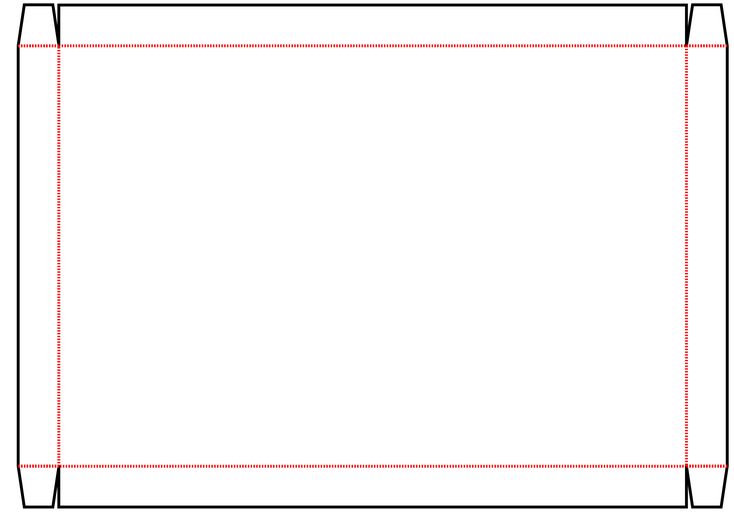

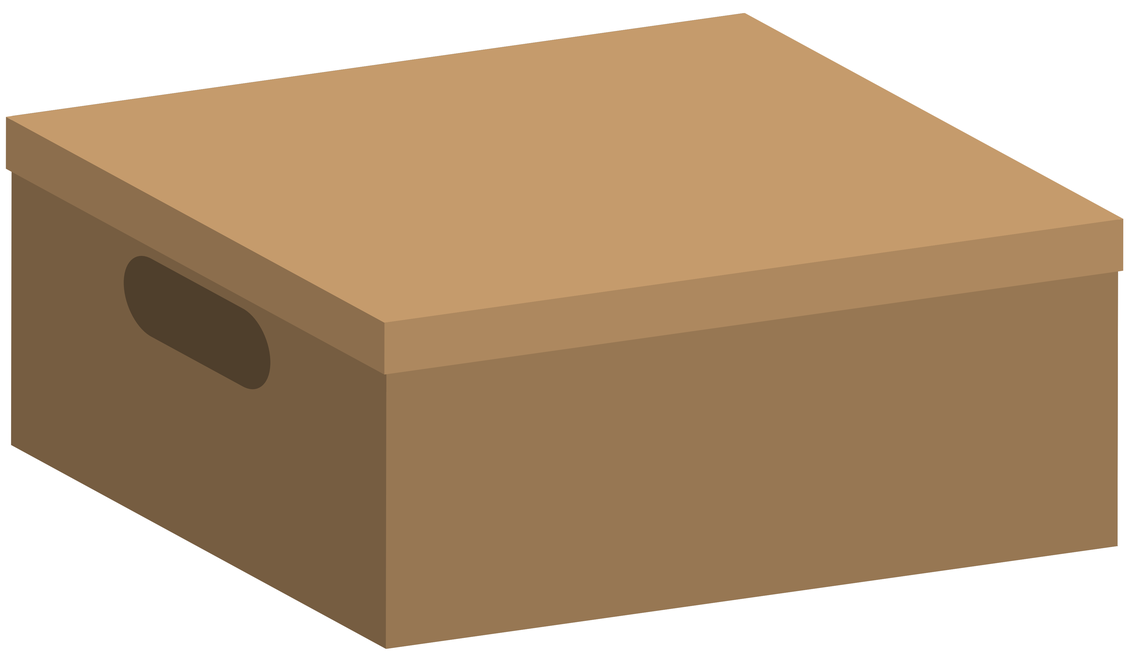

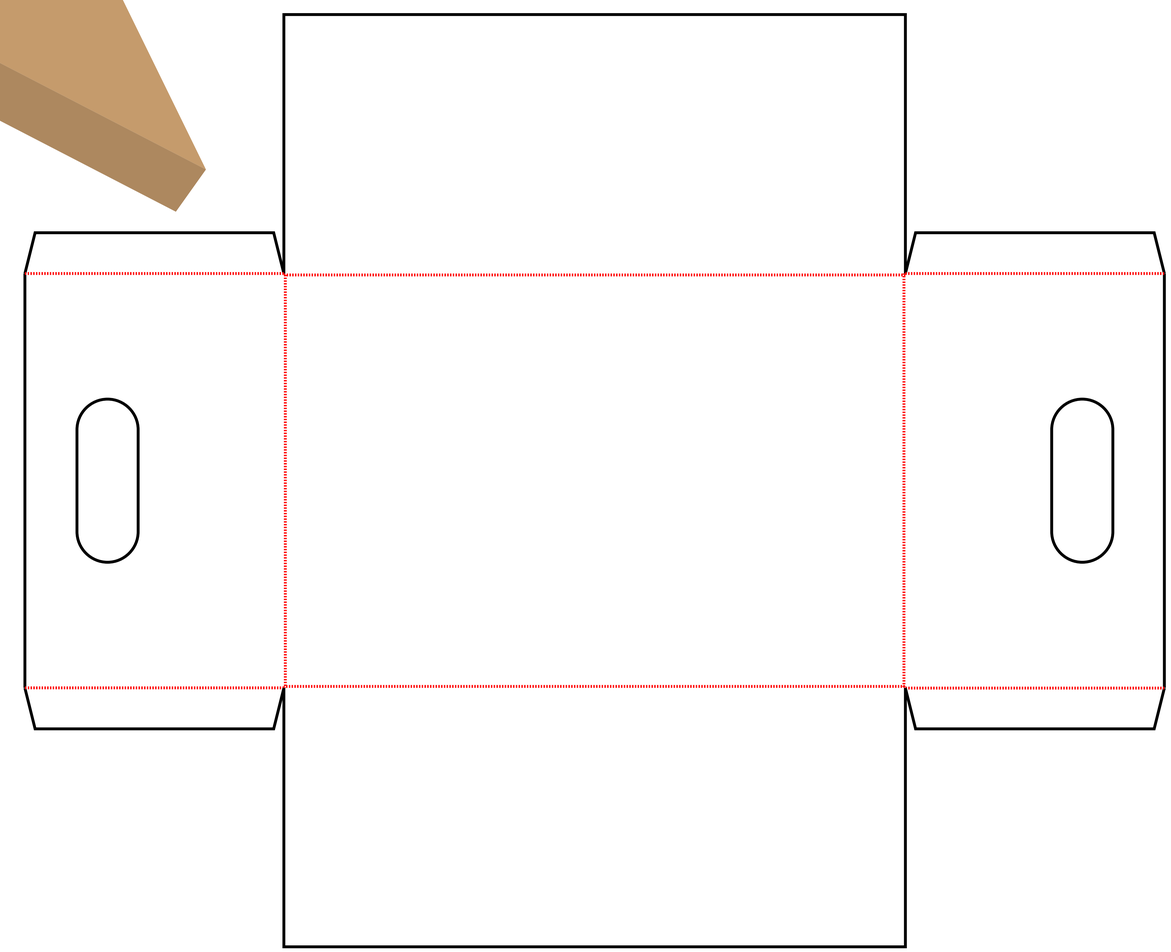

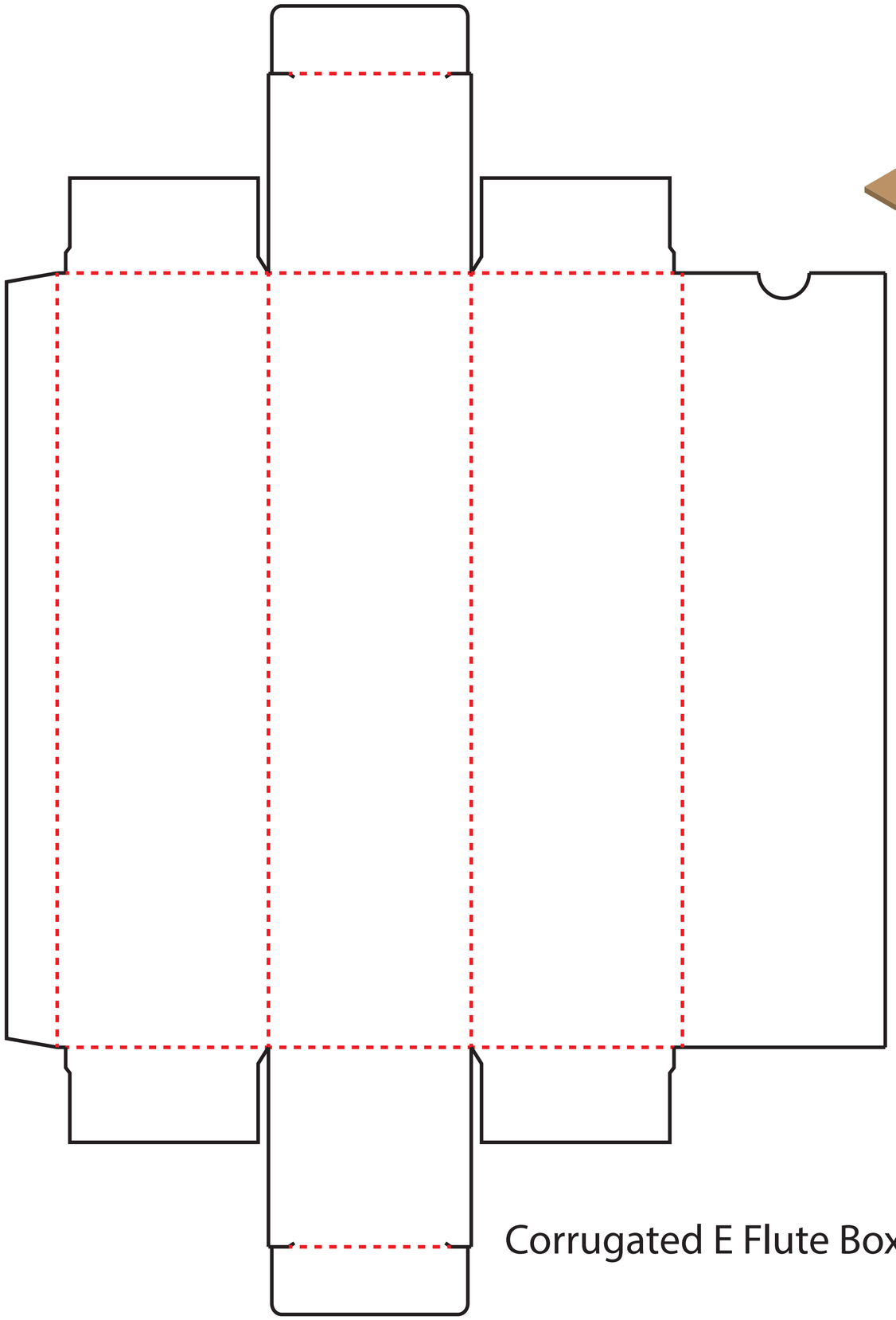

Corrugated E Flute Box

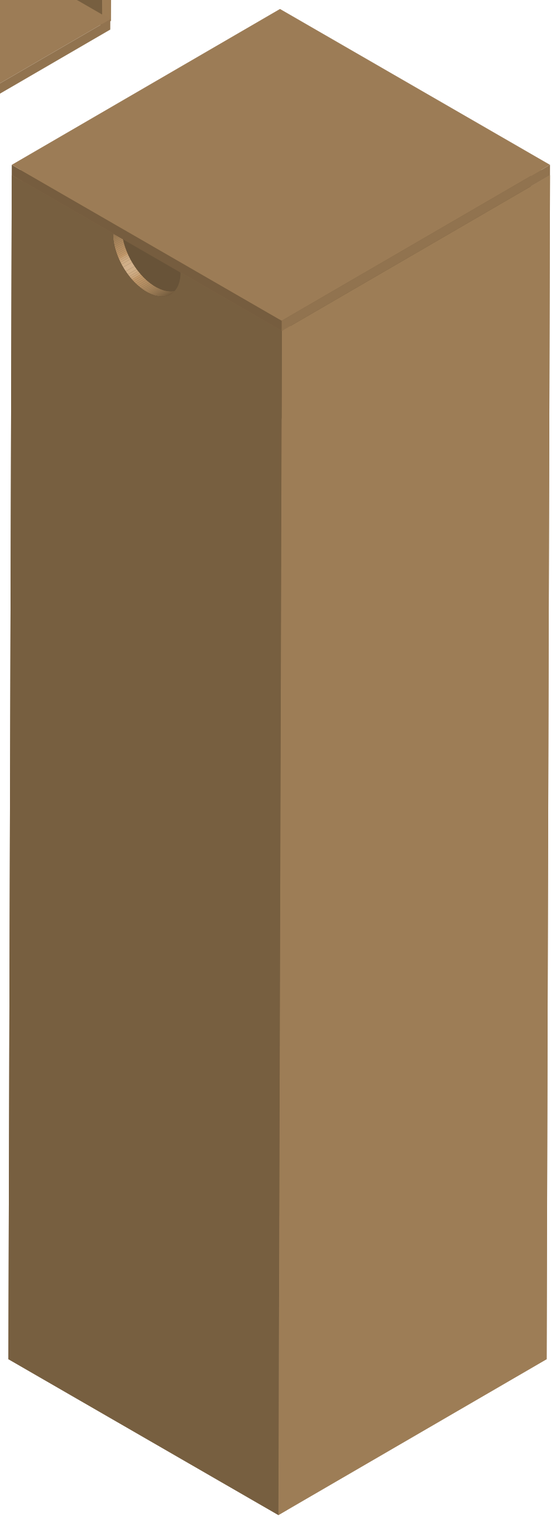

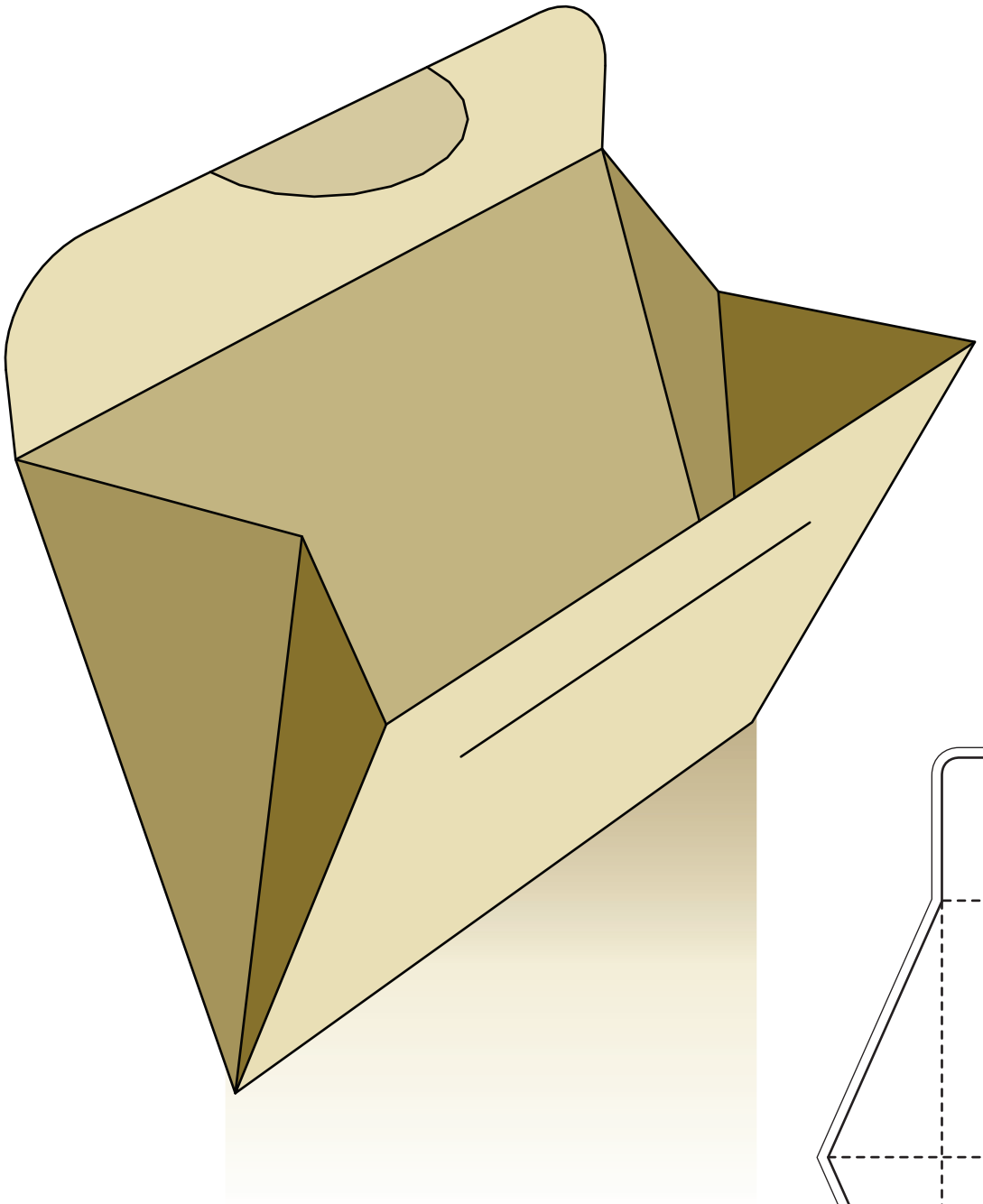

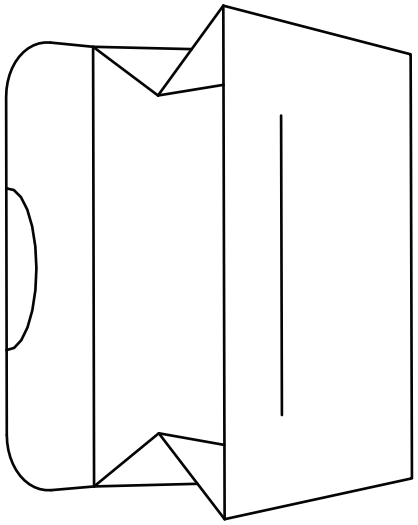

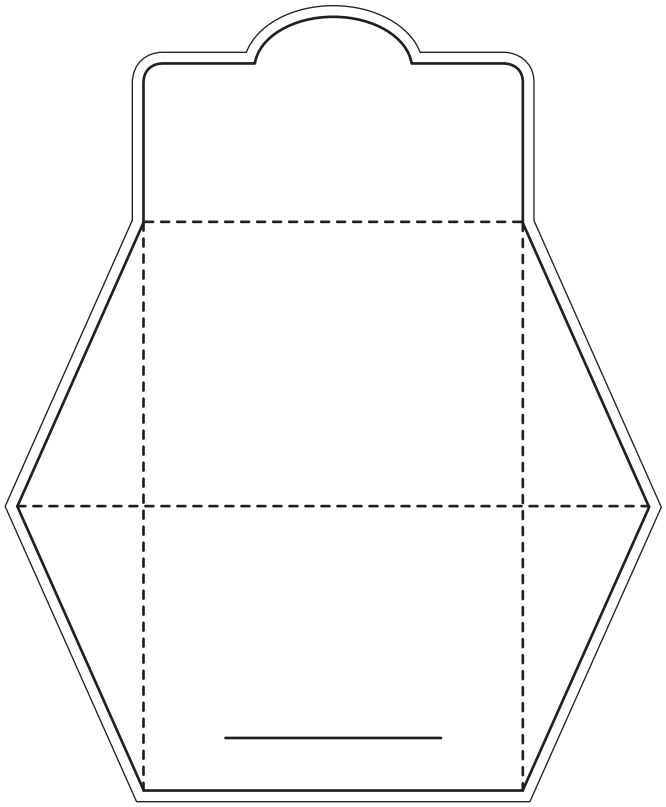

printing bleed

die-cuting line

folding line

perforaion line

zipper line

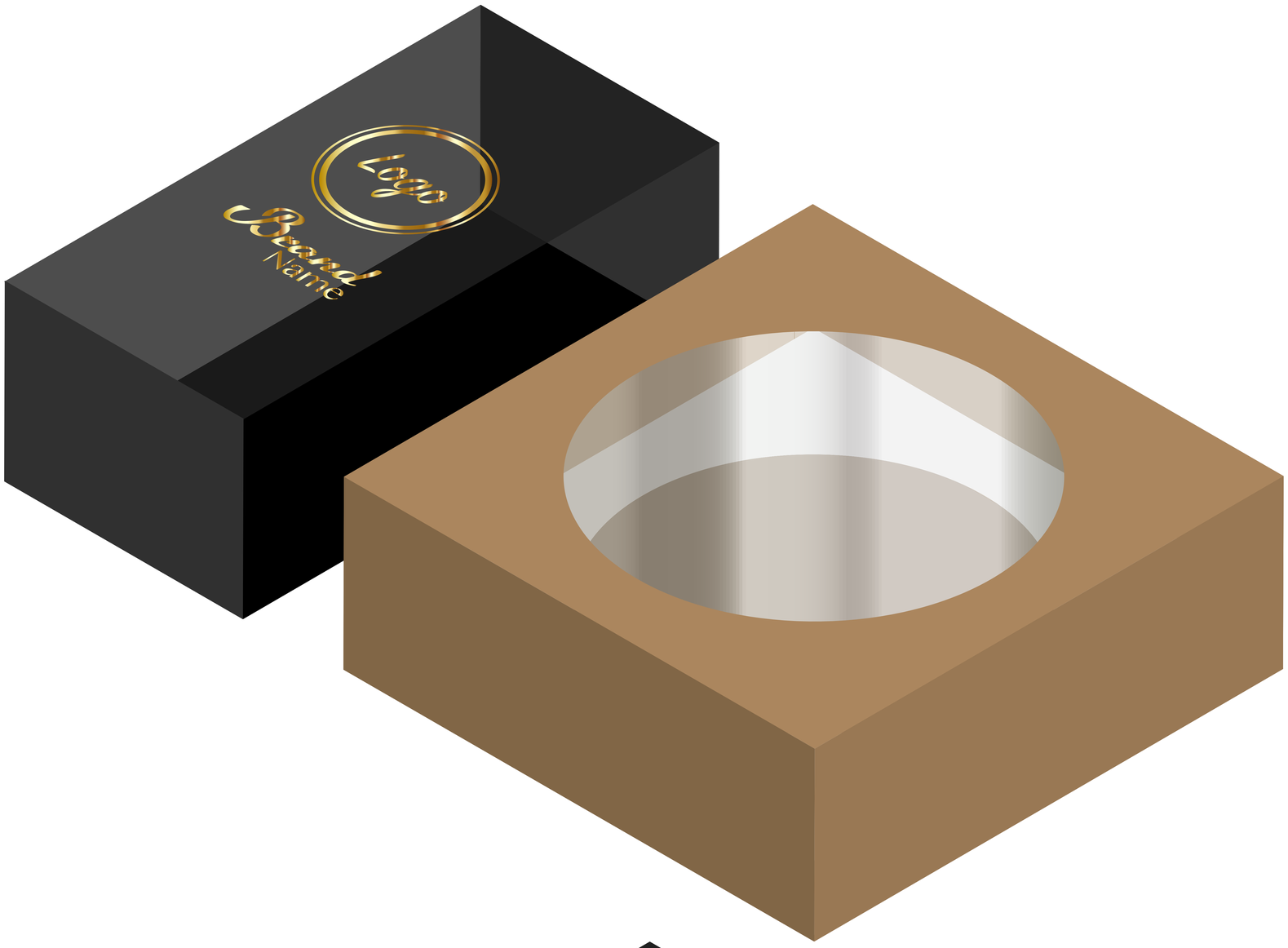

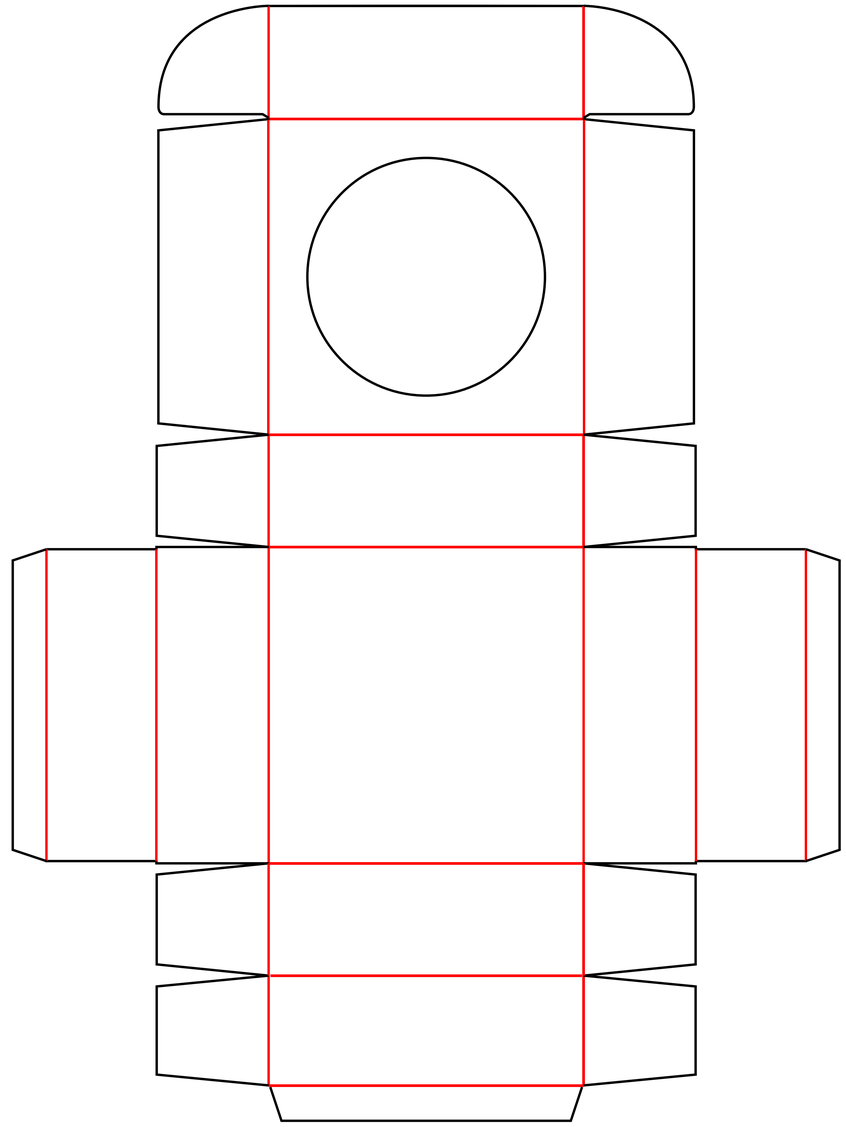

Plastic Sheet

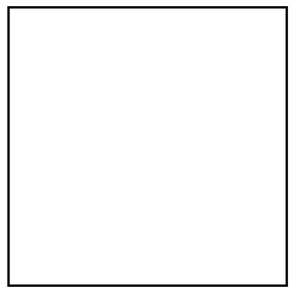

Product Support

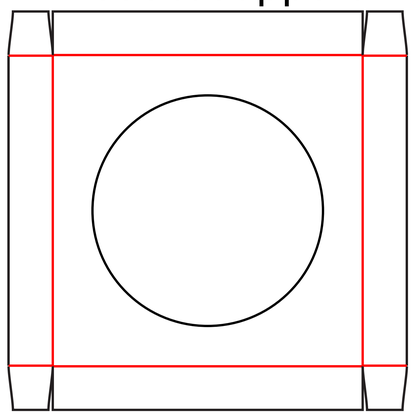

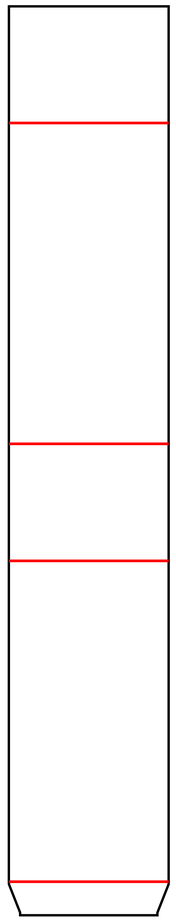

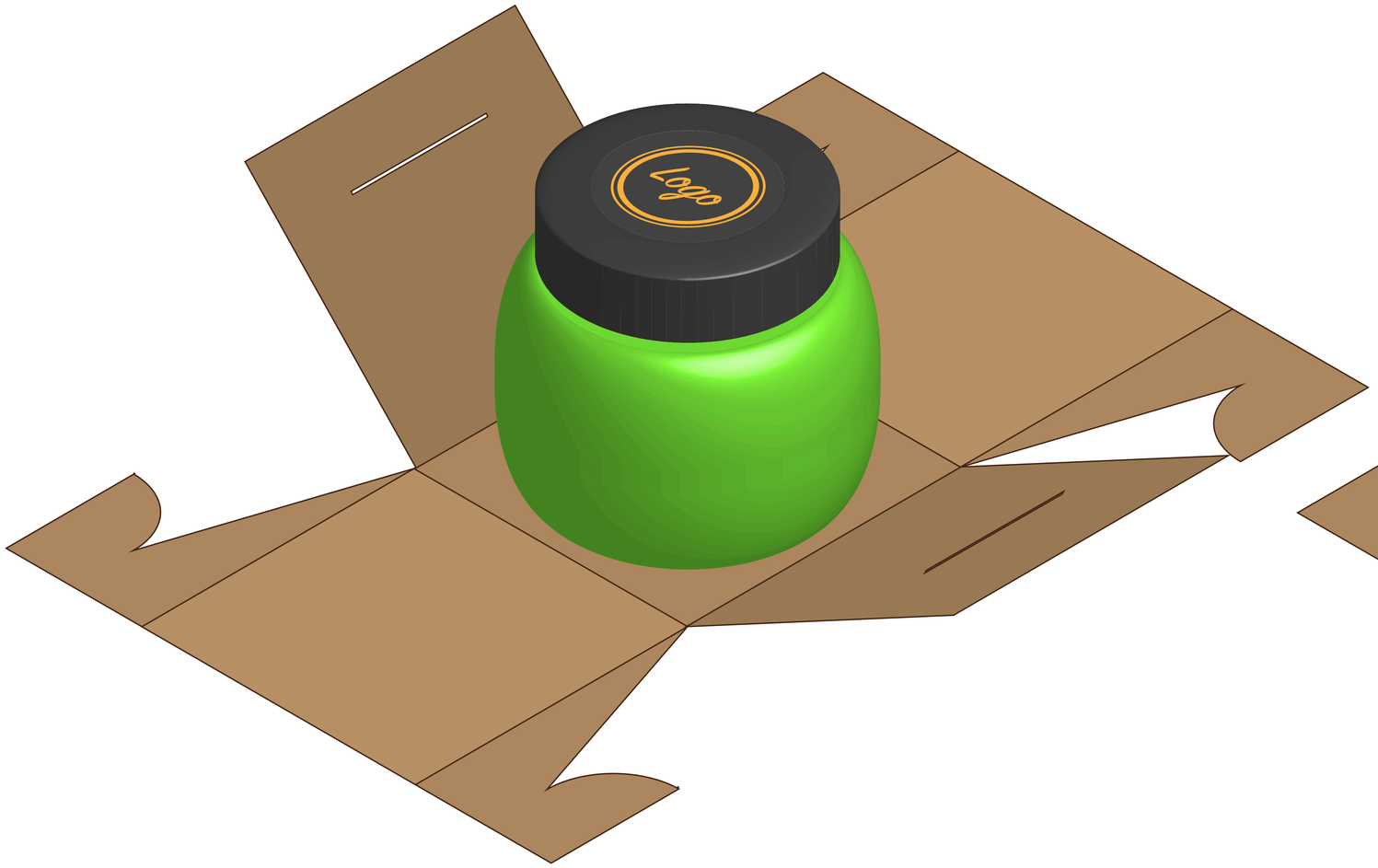
Logo

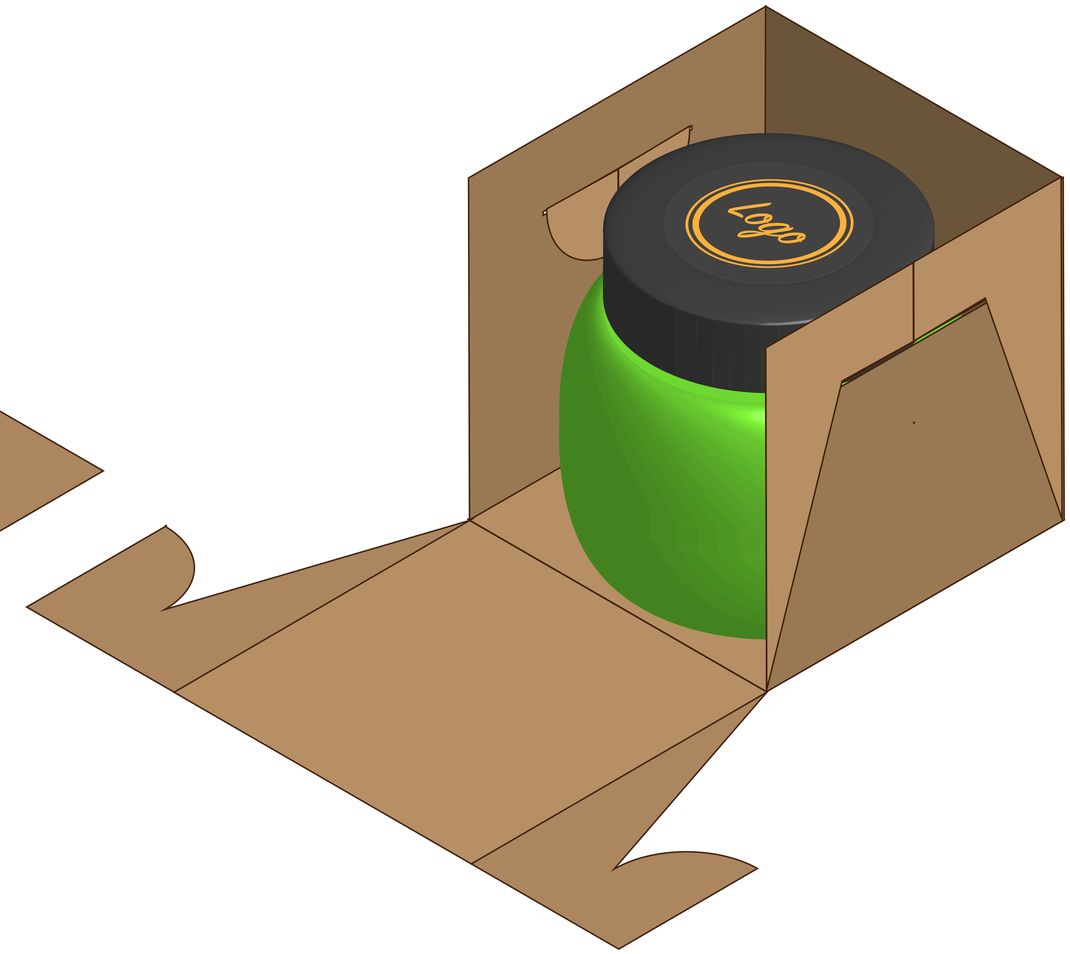
Logo

Logo

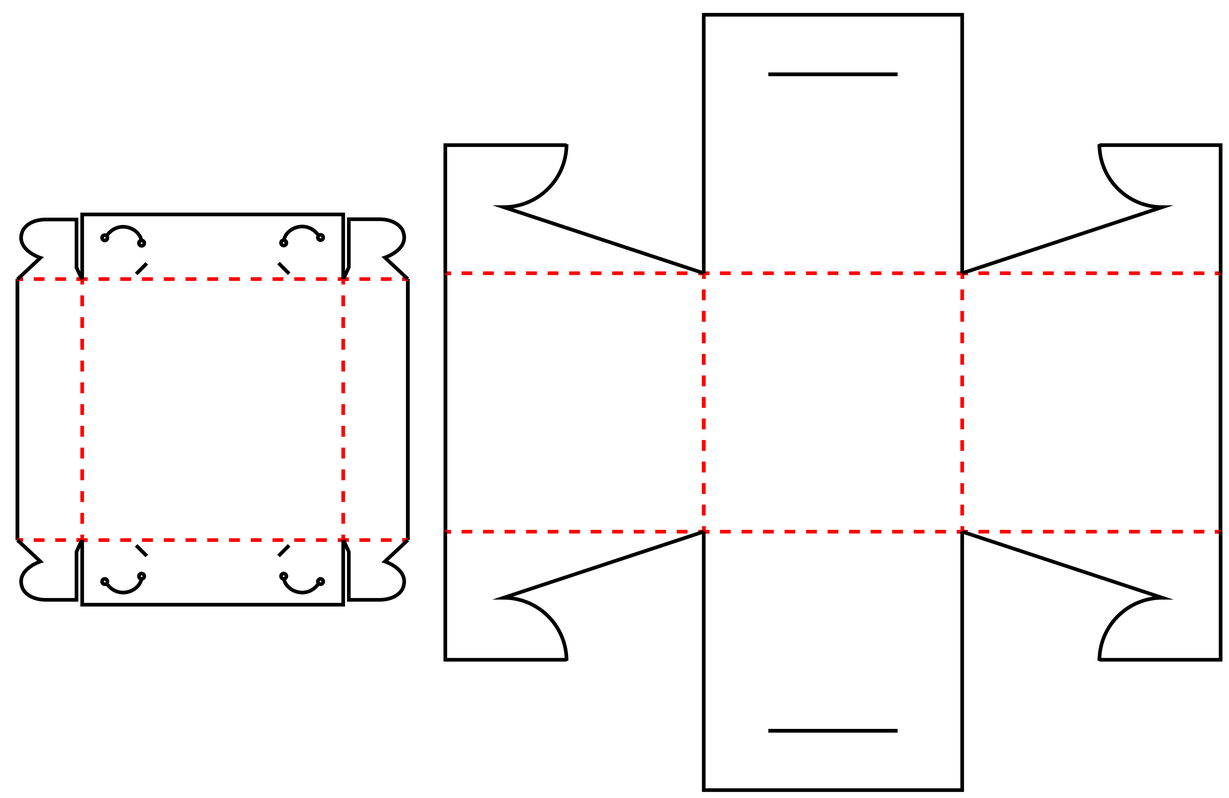

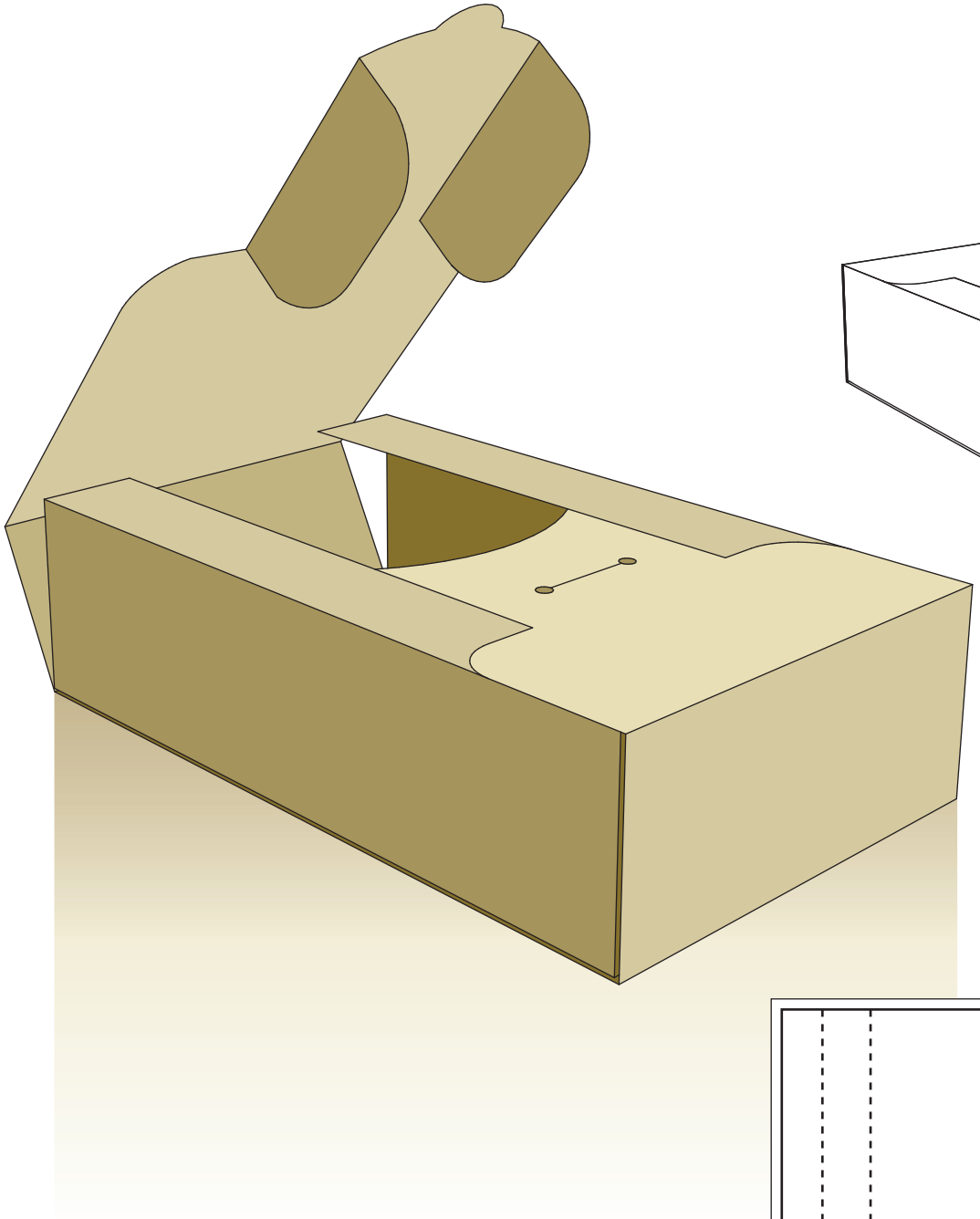

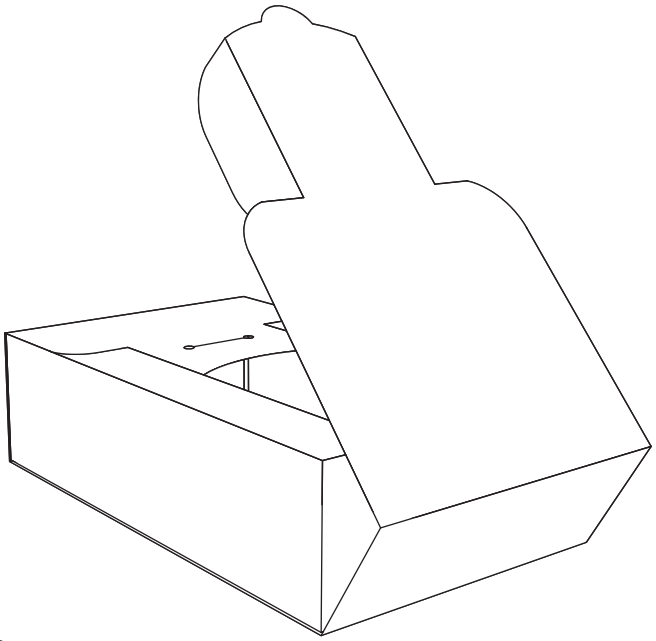

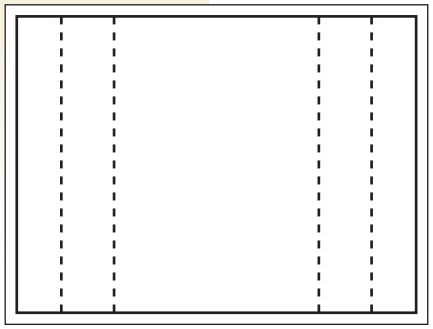

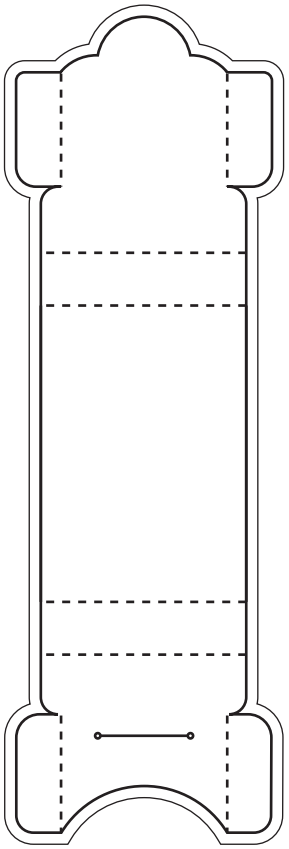

printing bleed

die-cuting line

folding line

perforaion line

zipper line