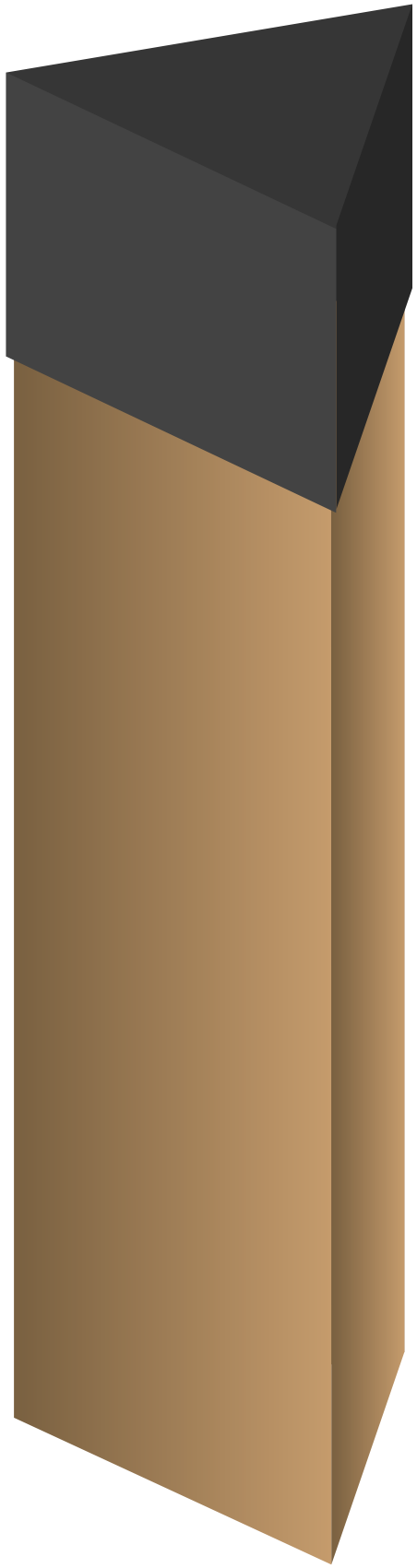

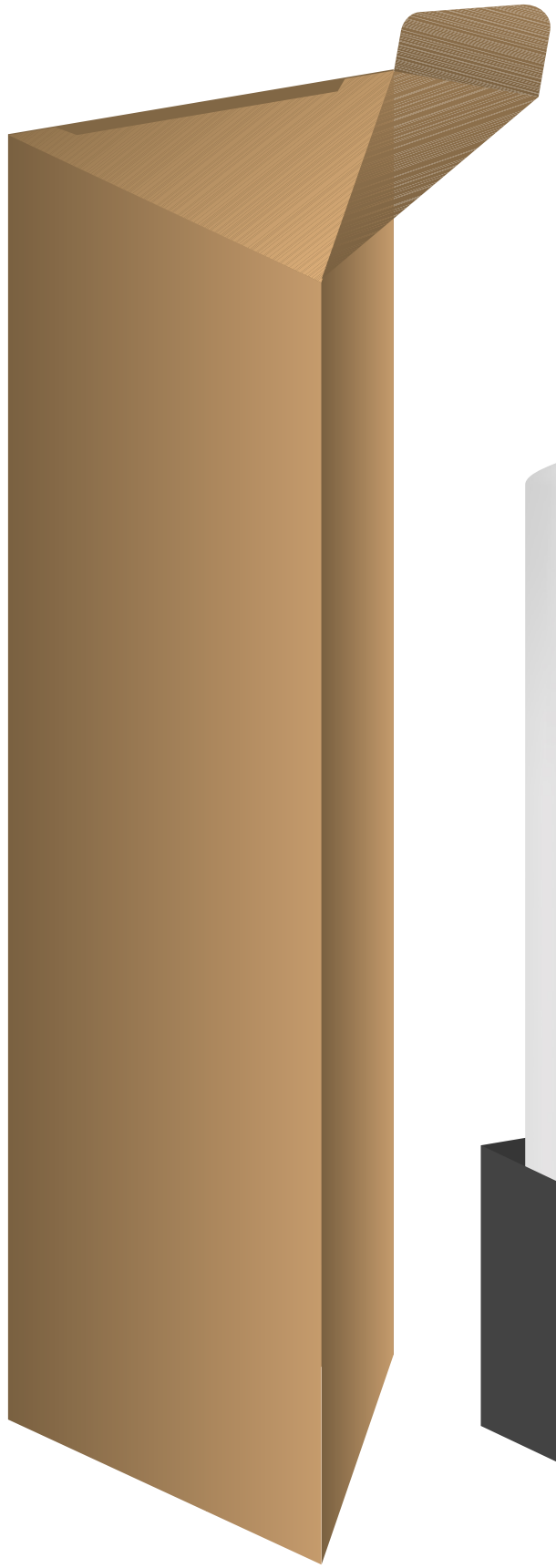

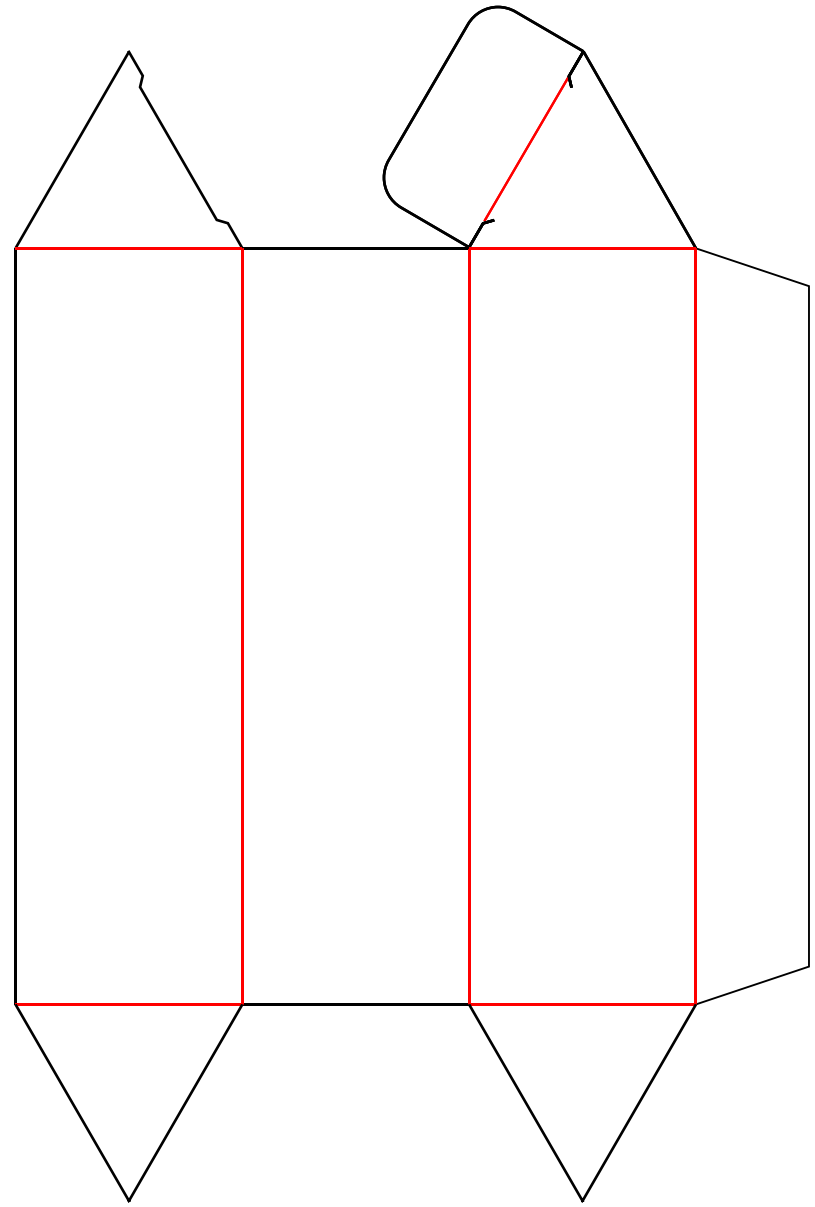

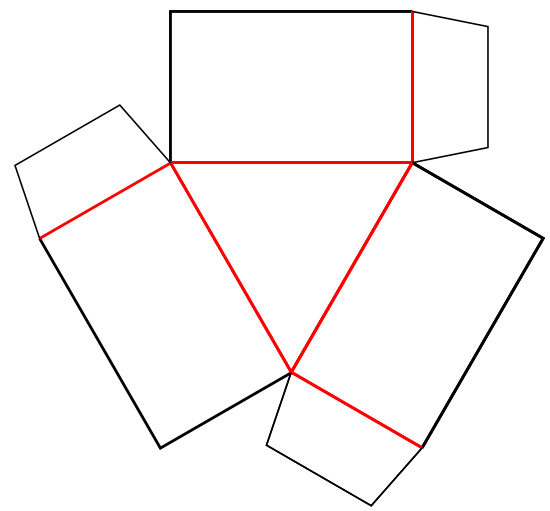

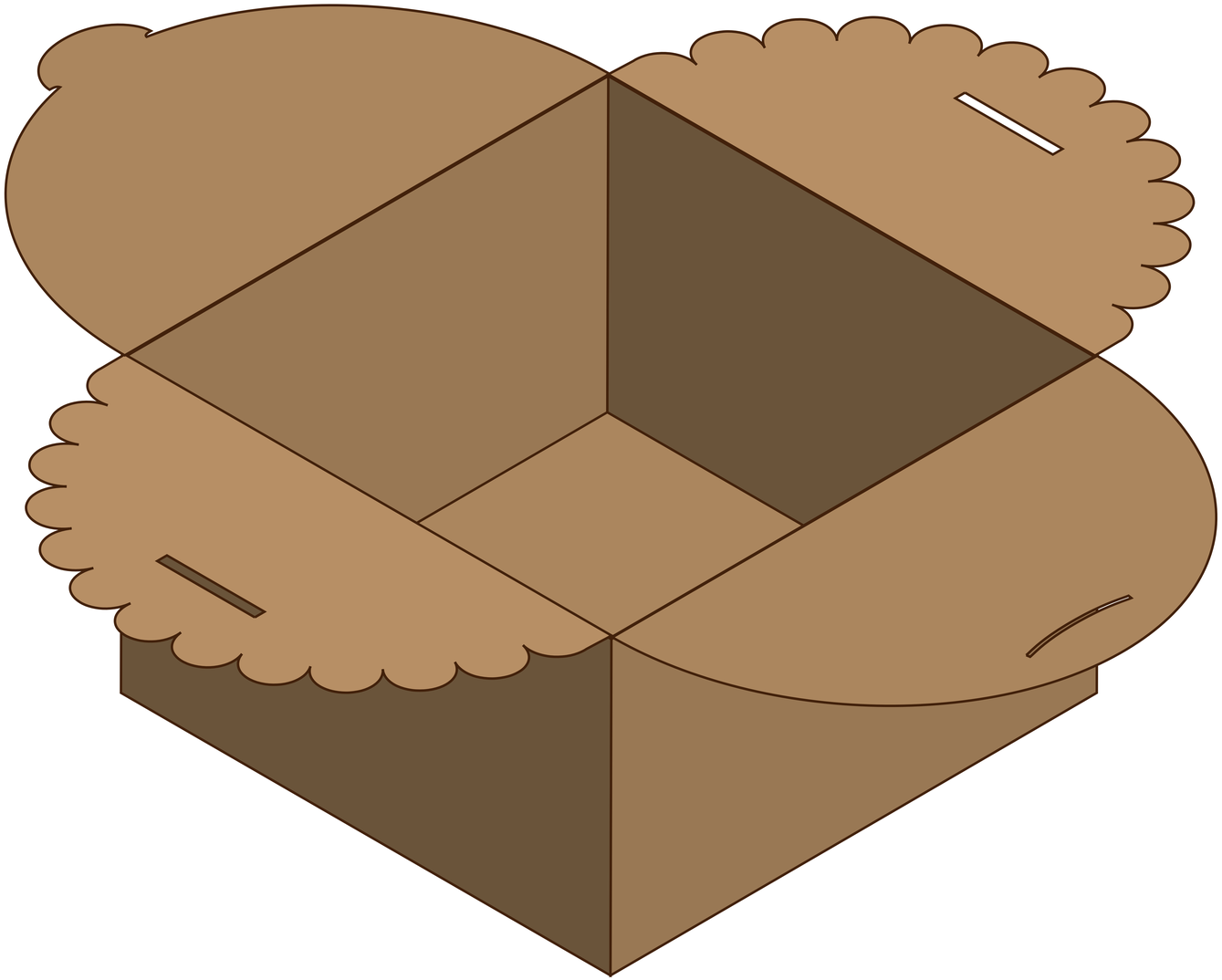

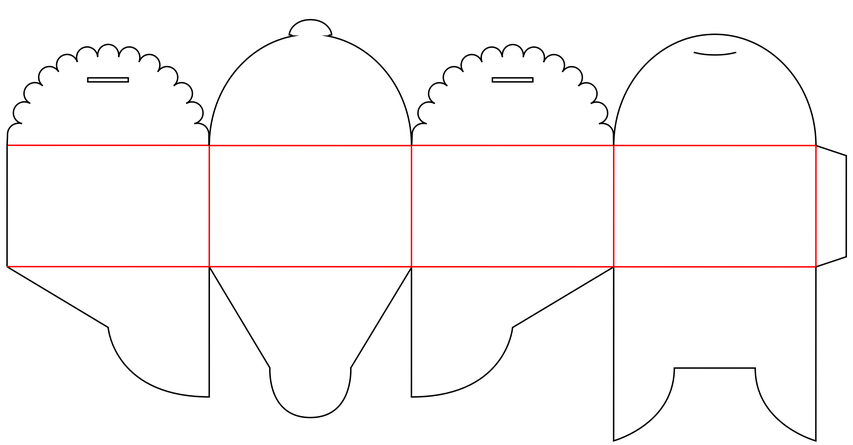

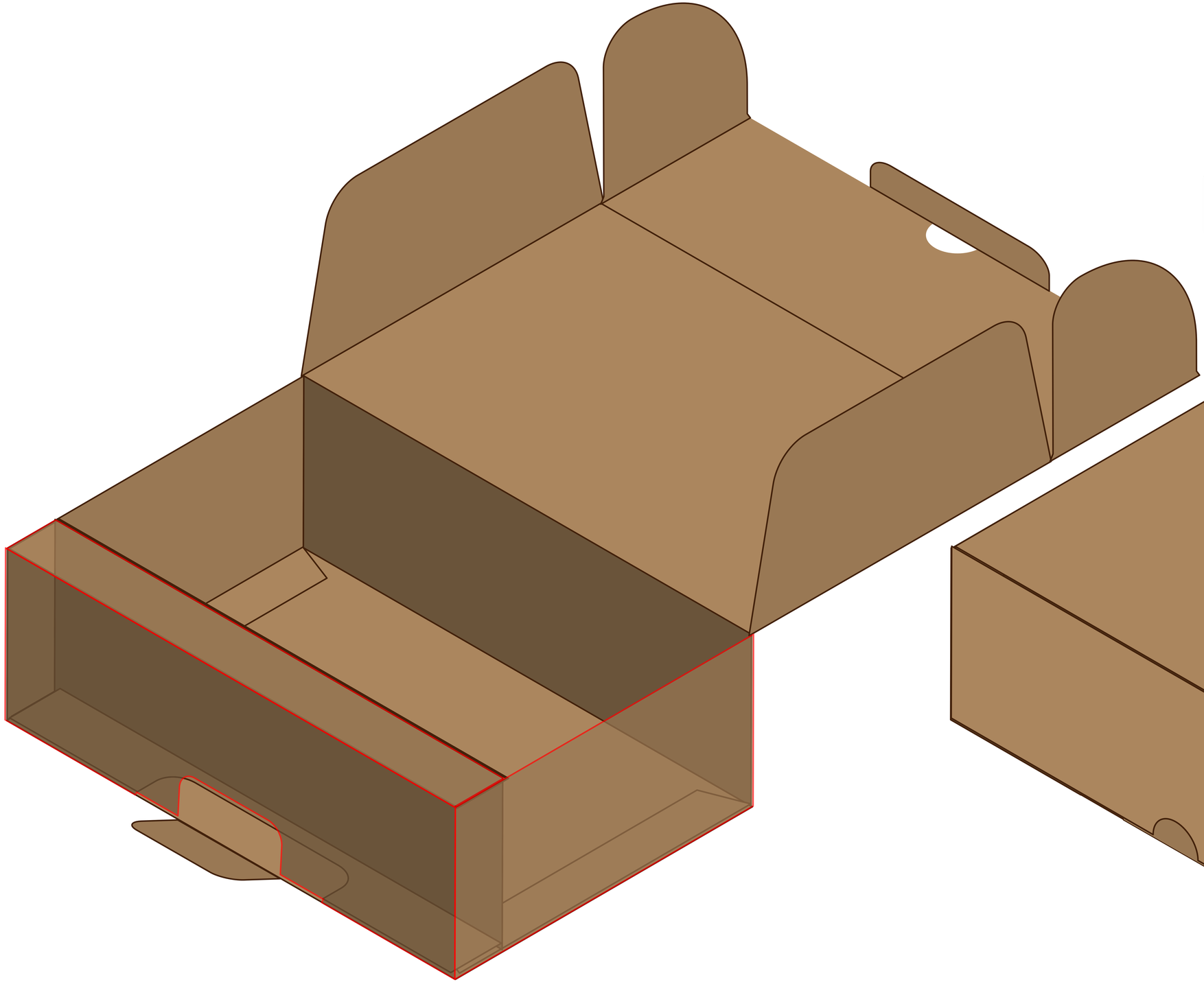

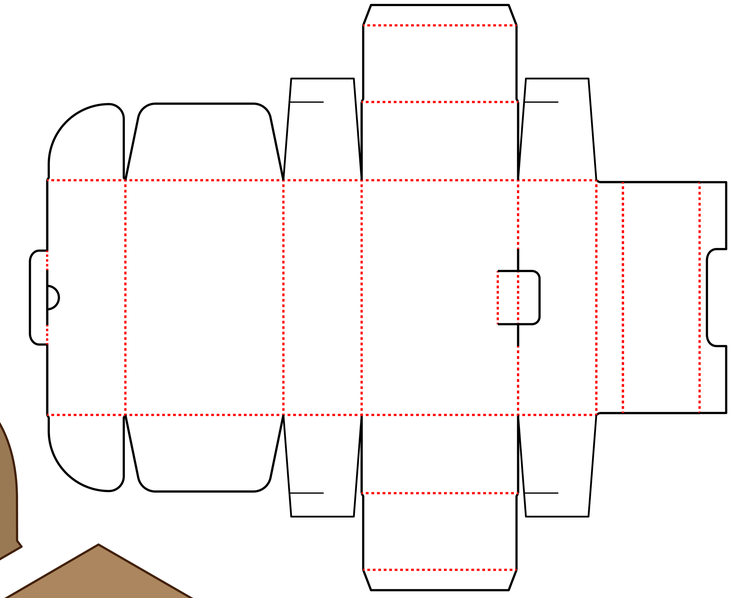

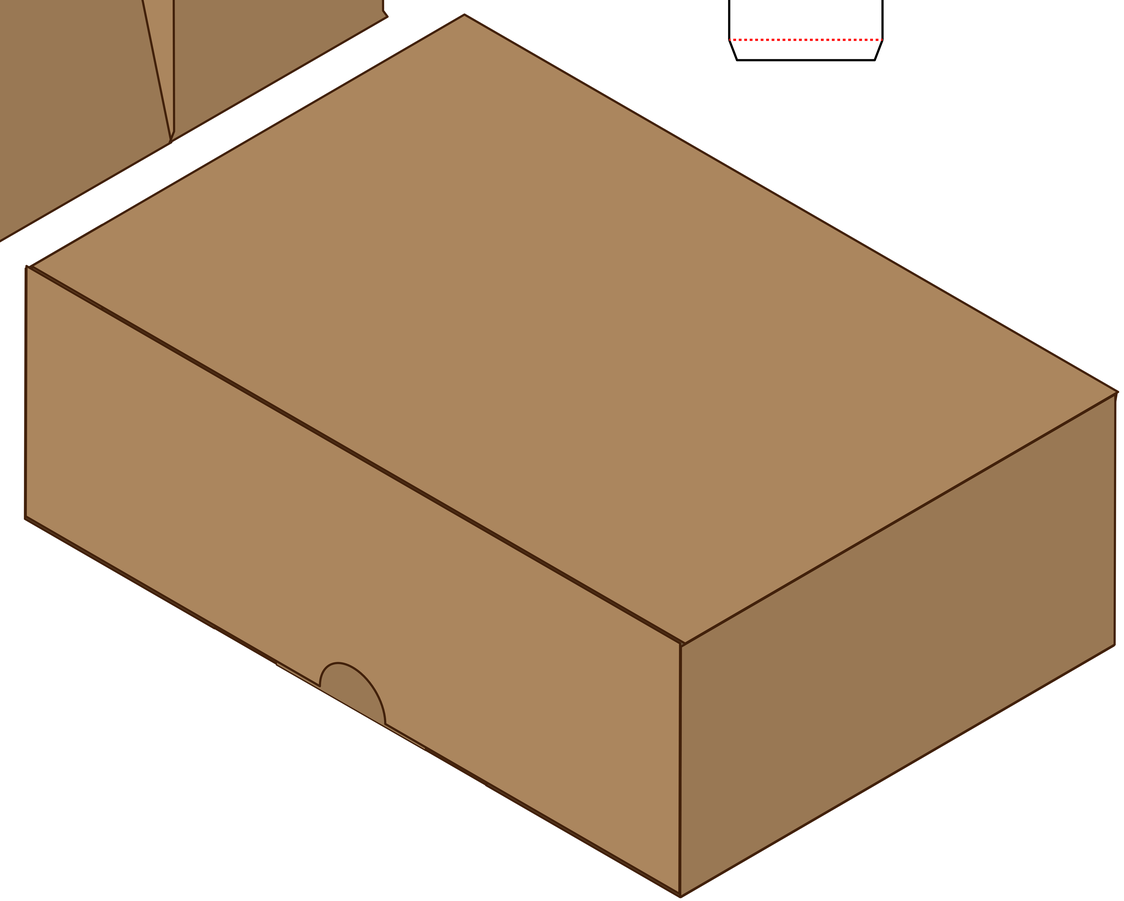

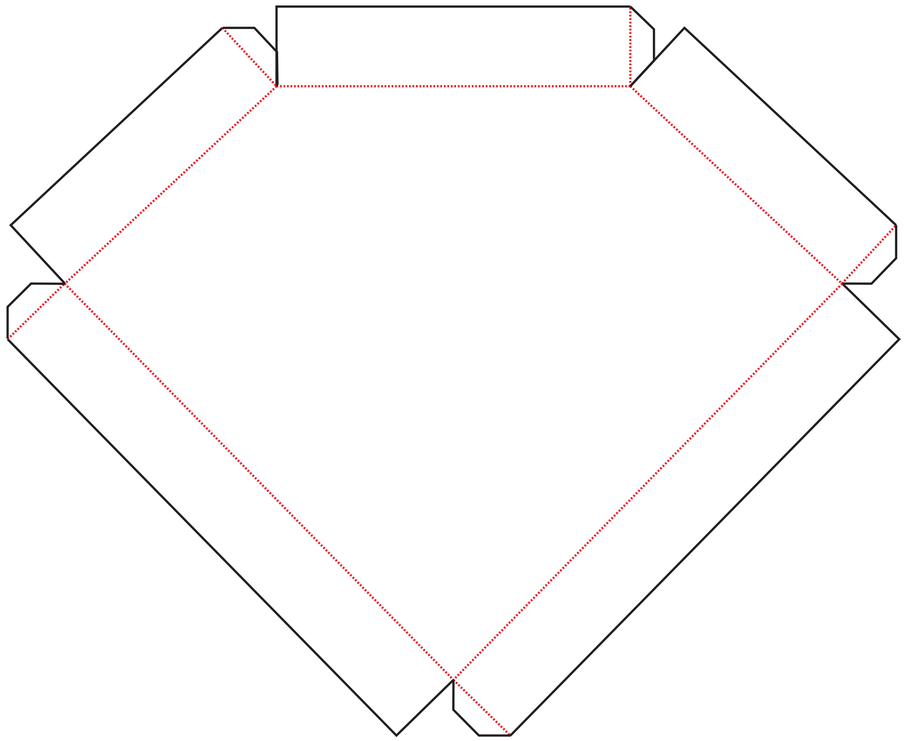

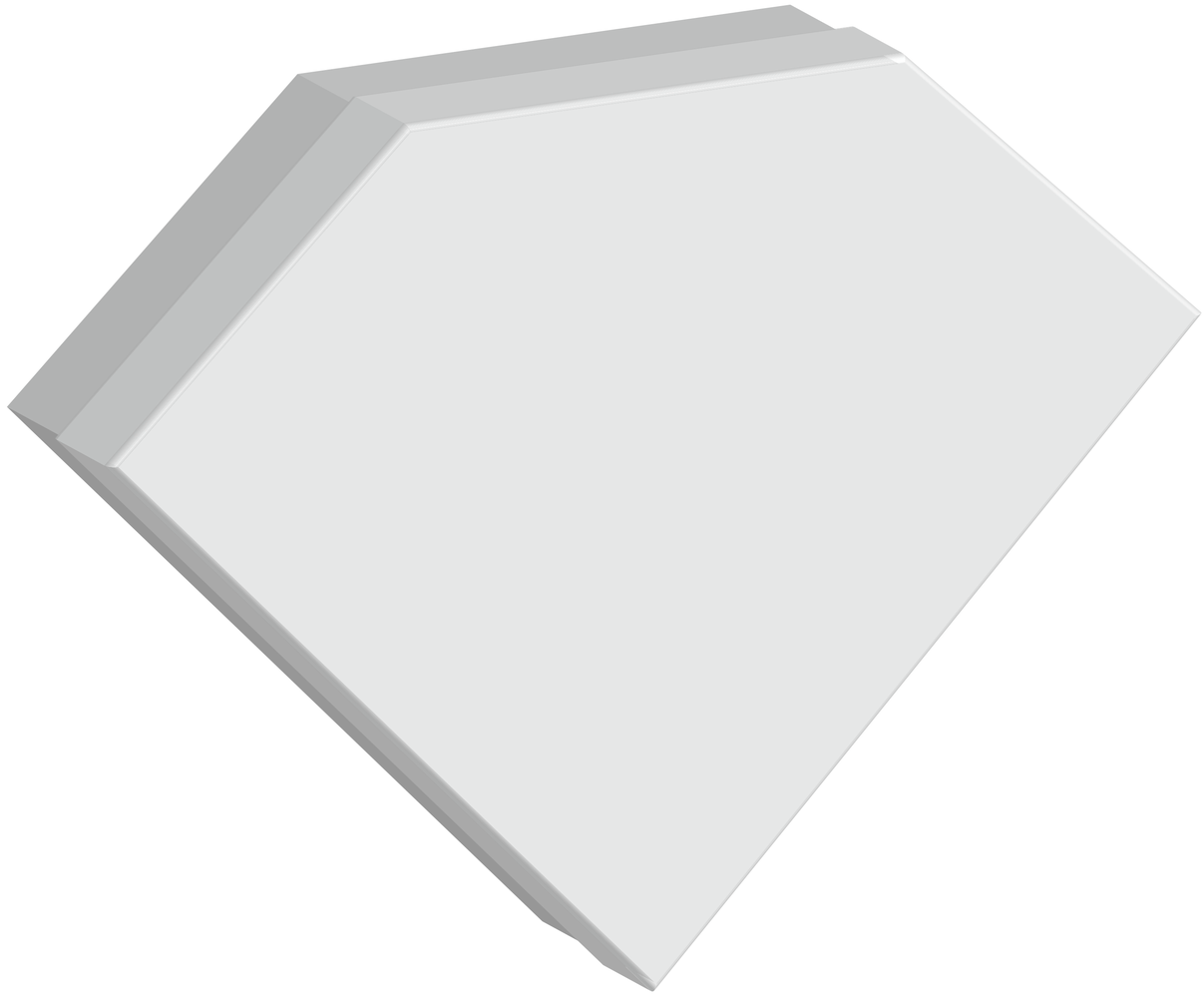

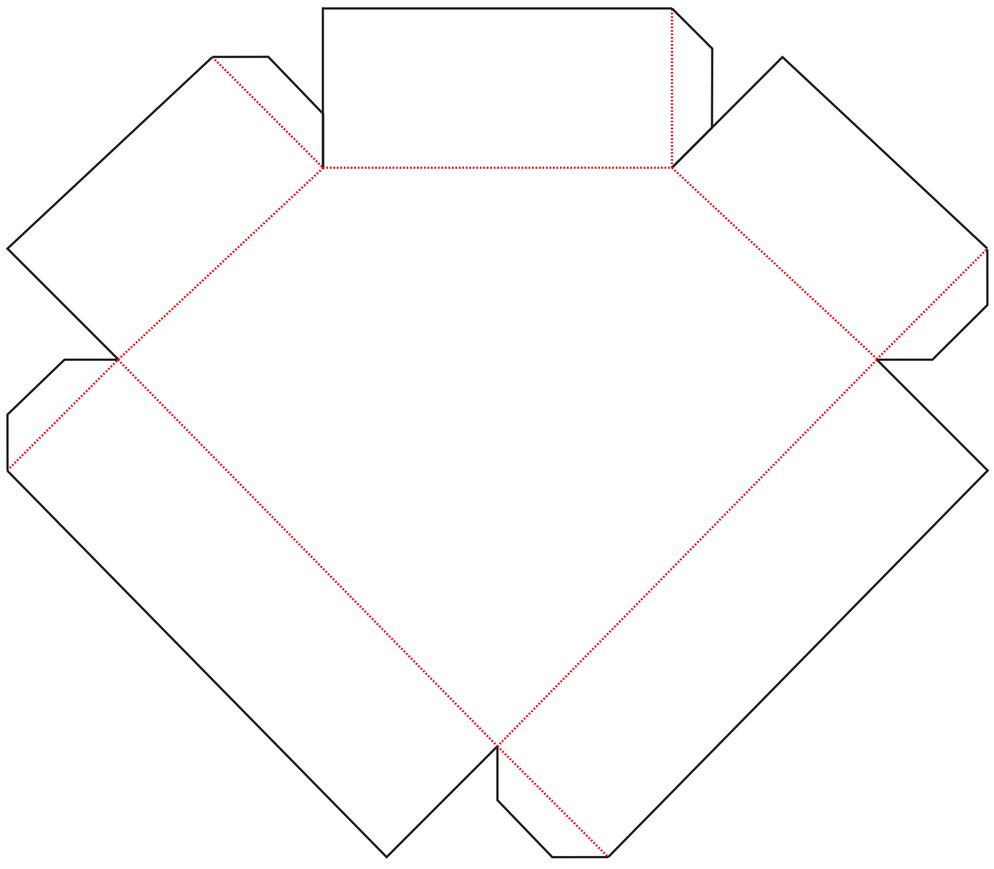

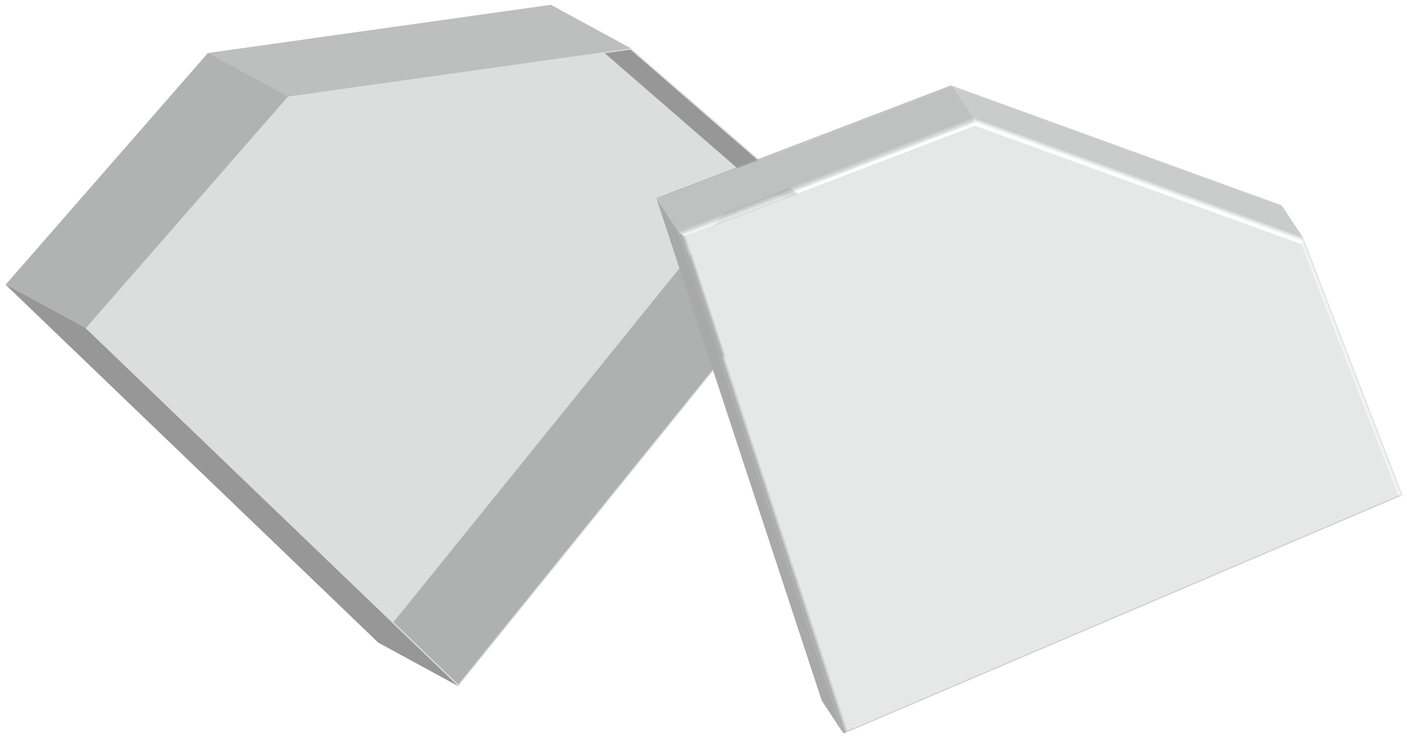

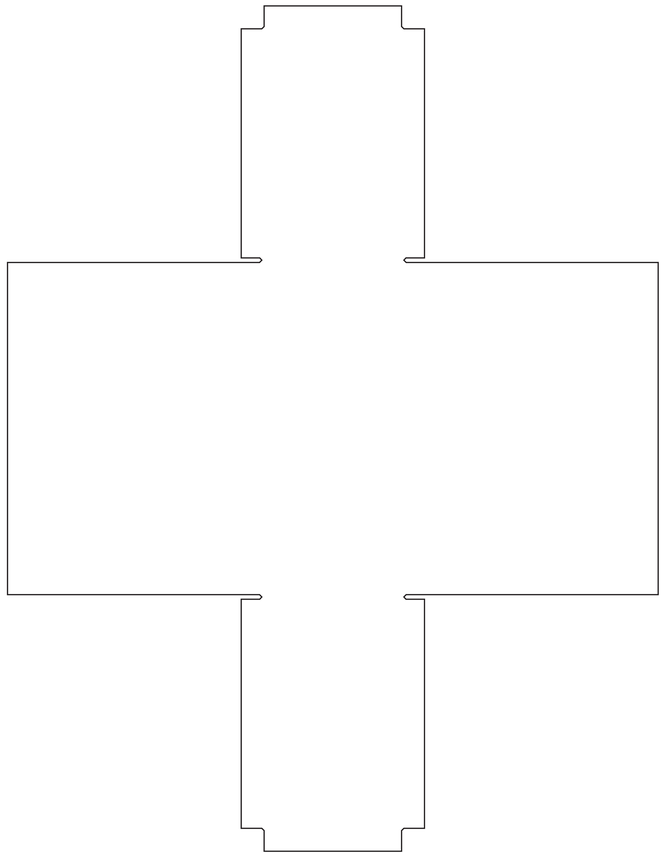

Wrapping Paper
Bottom Box

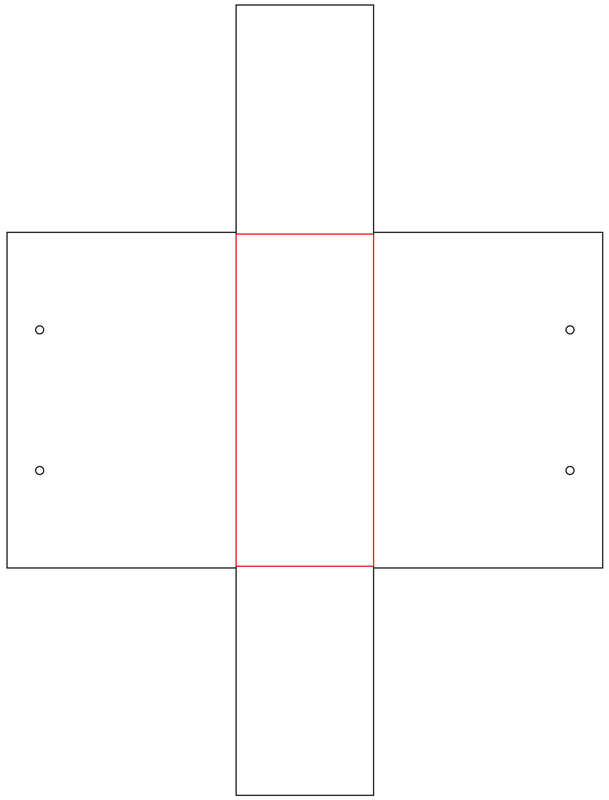

Hard Board Paper
Thick 0.16 cm
Bottom Box

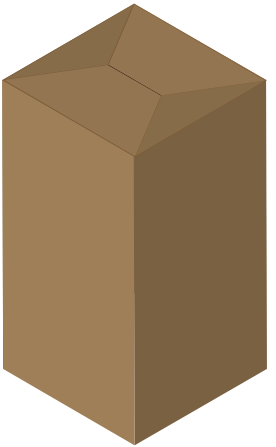

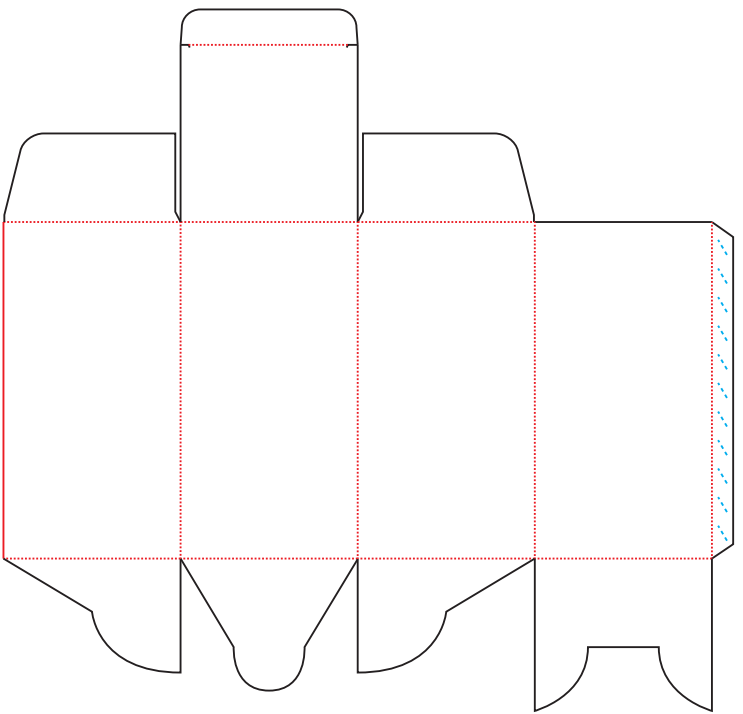

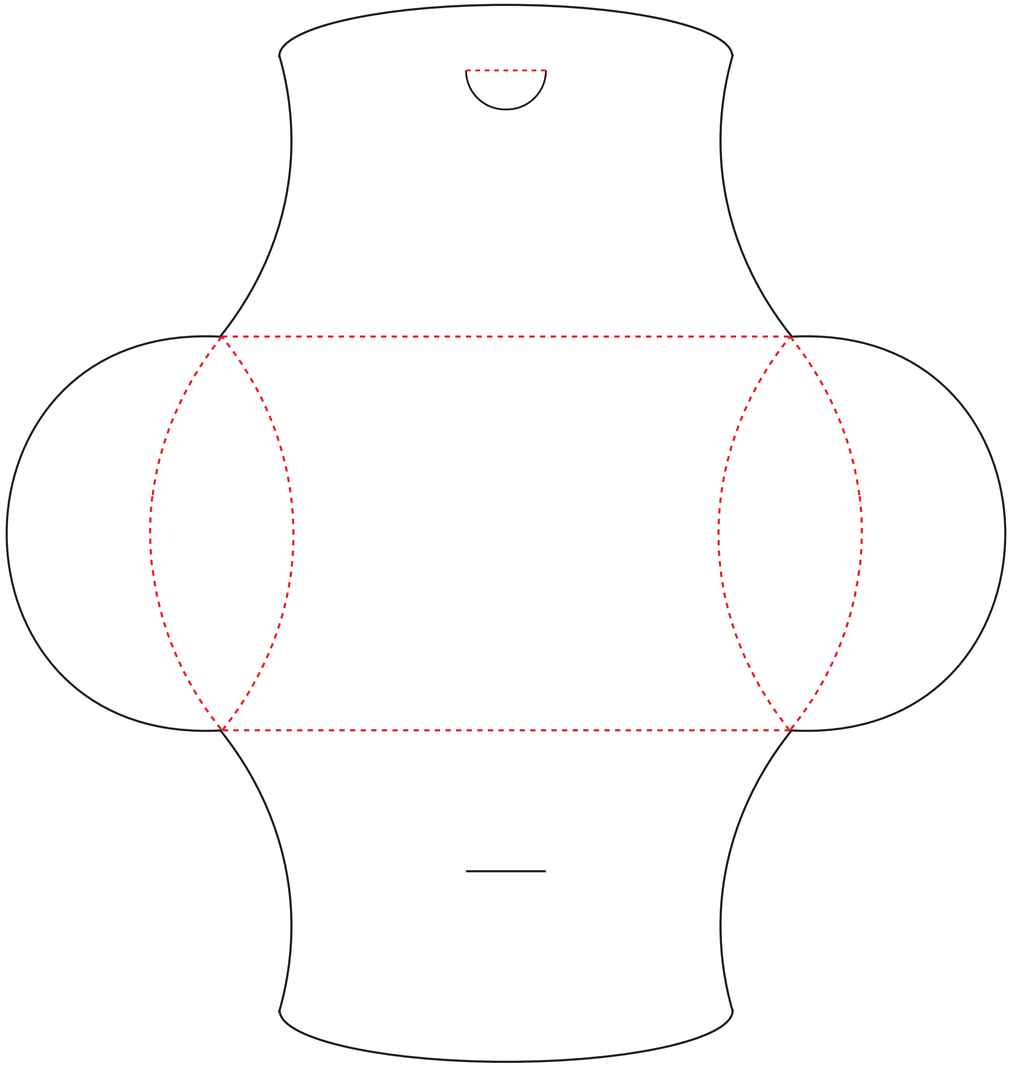

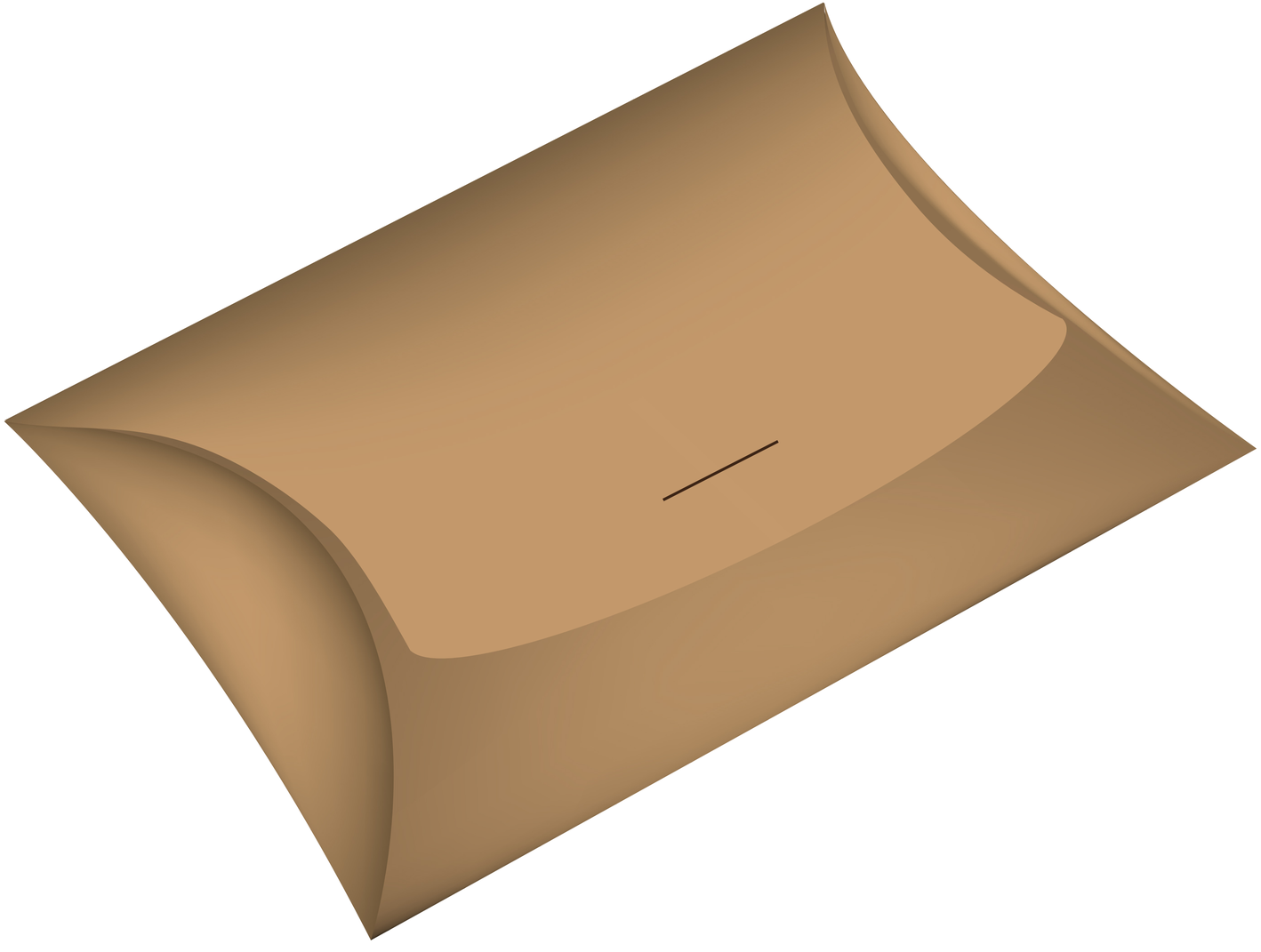

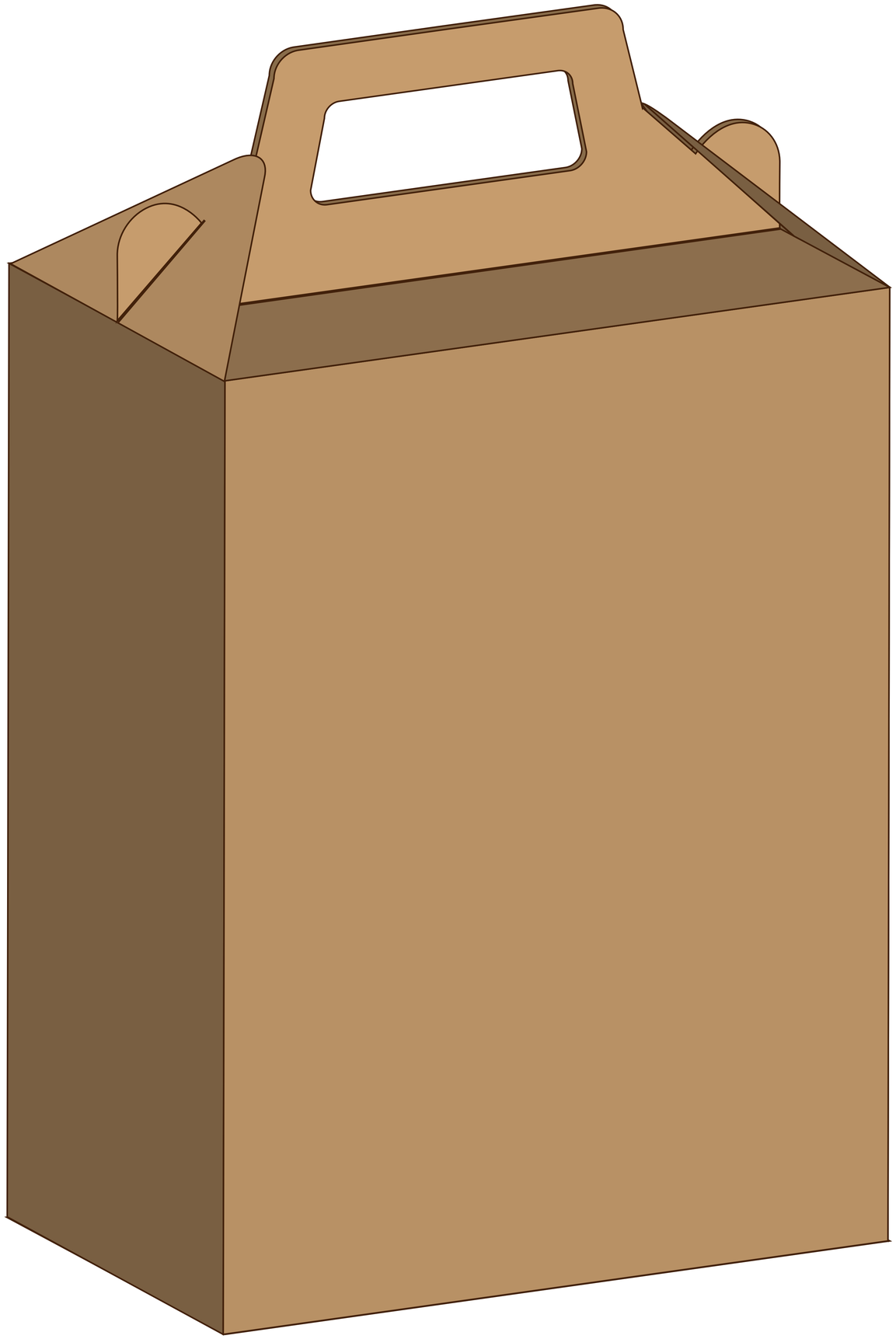

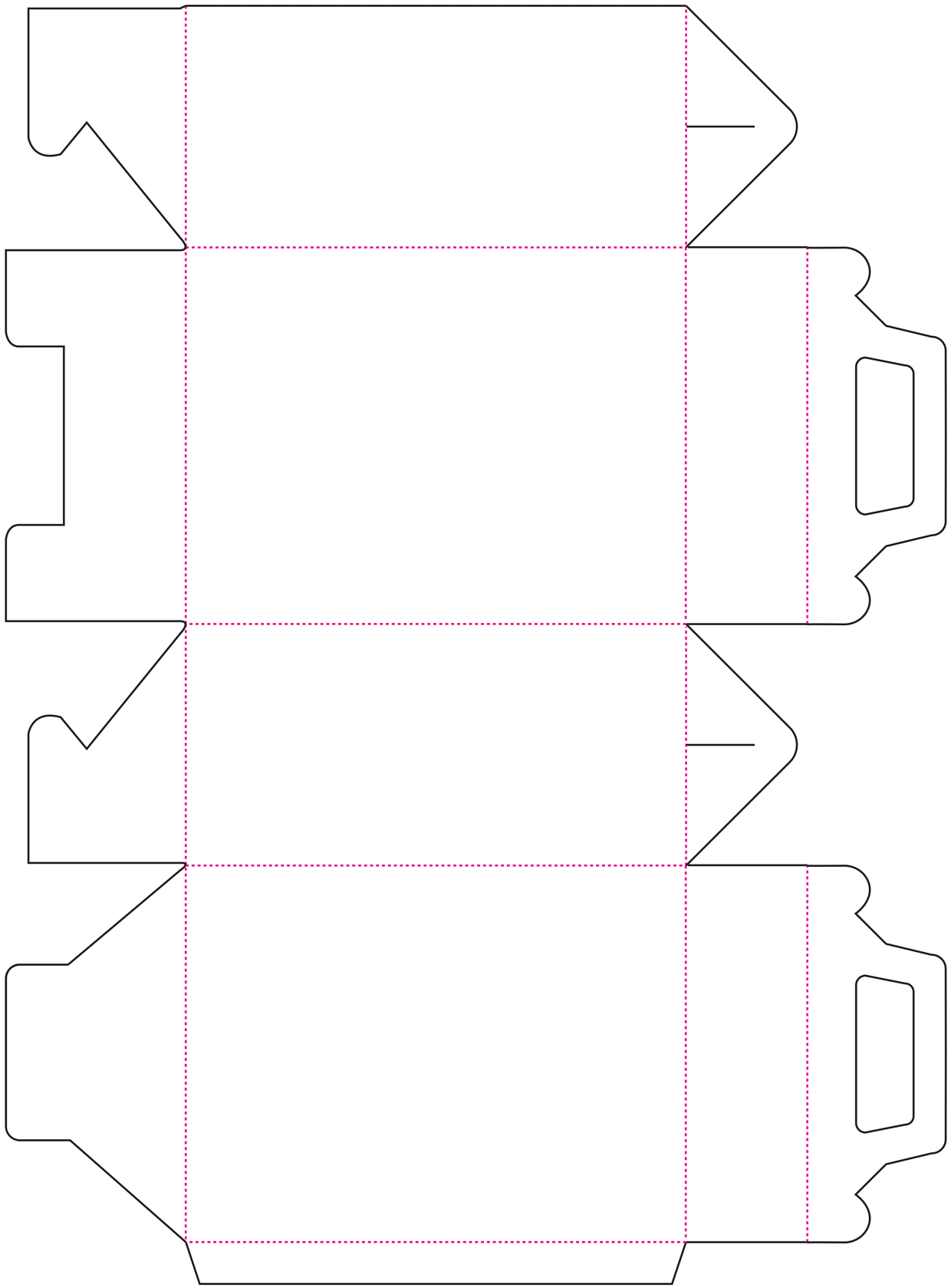

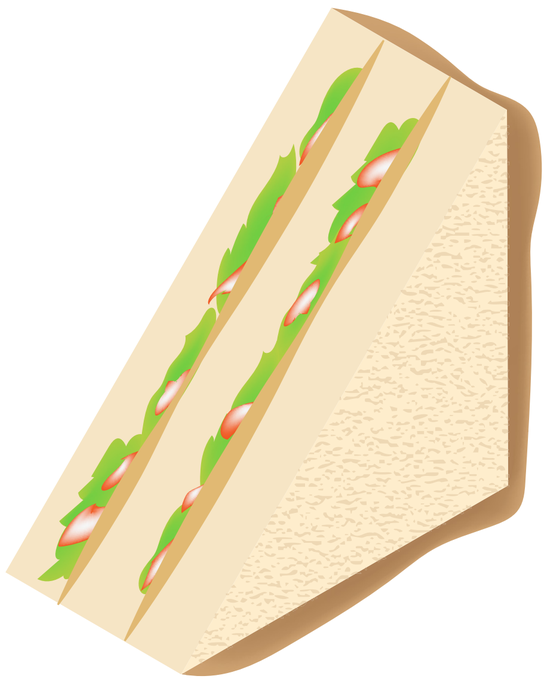

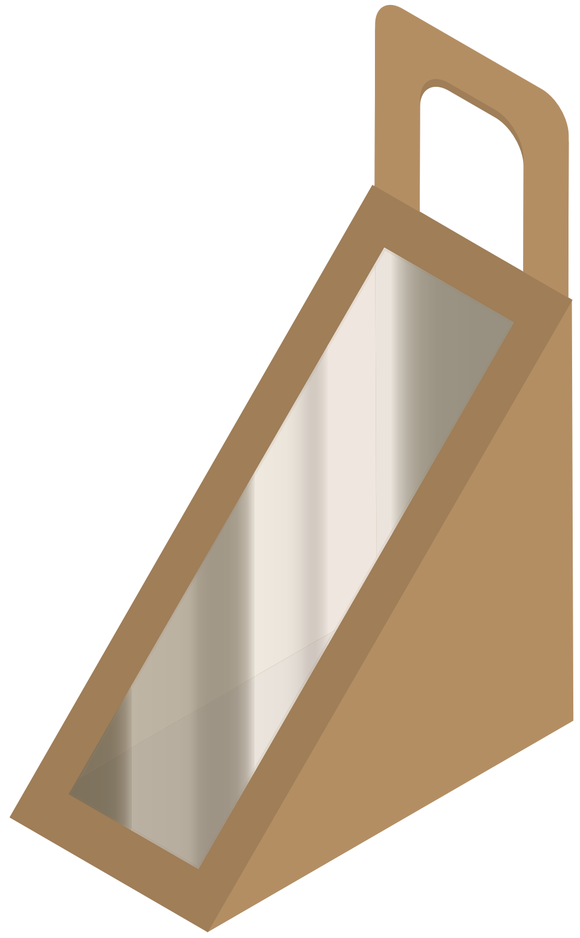

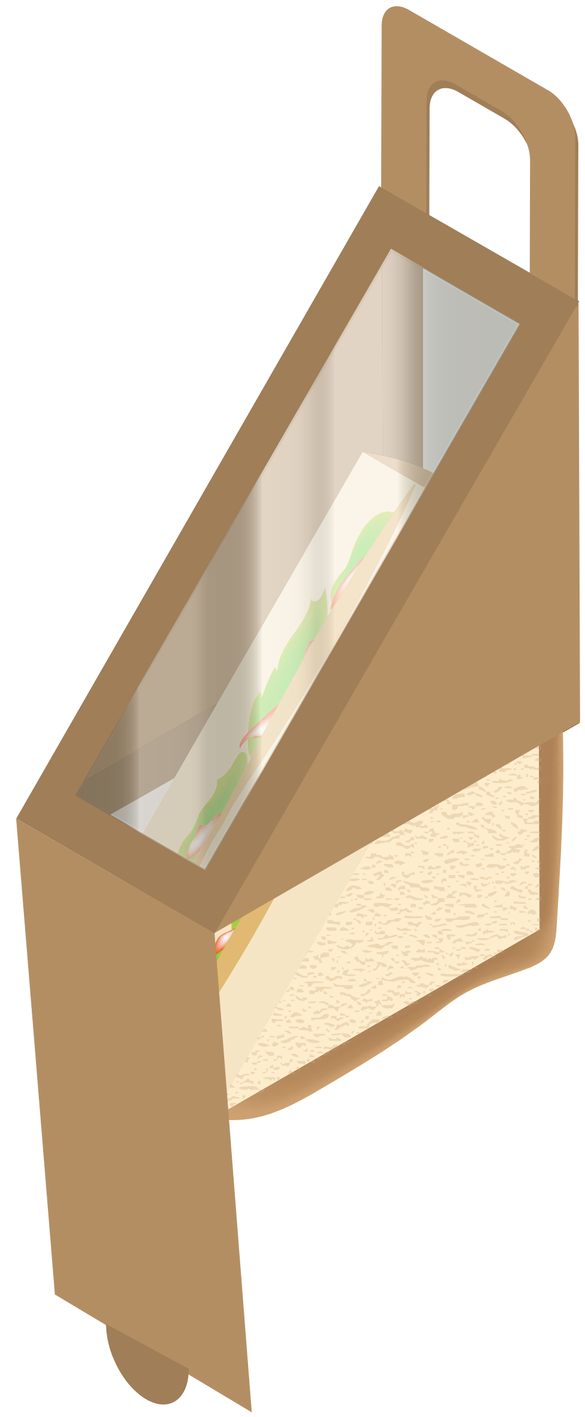

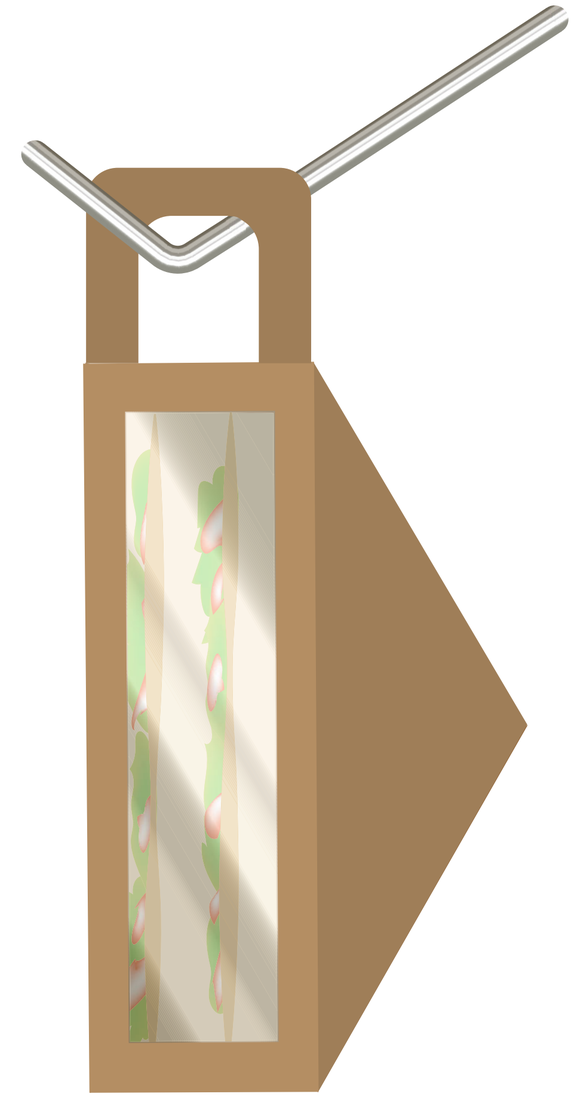

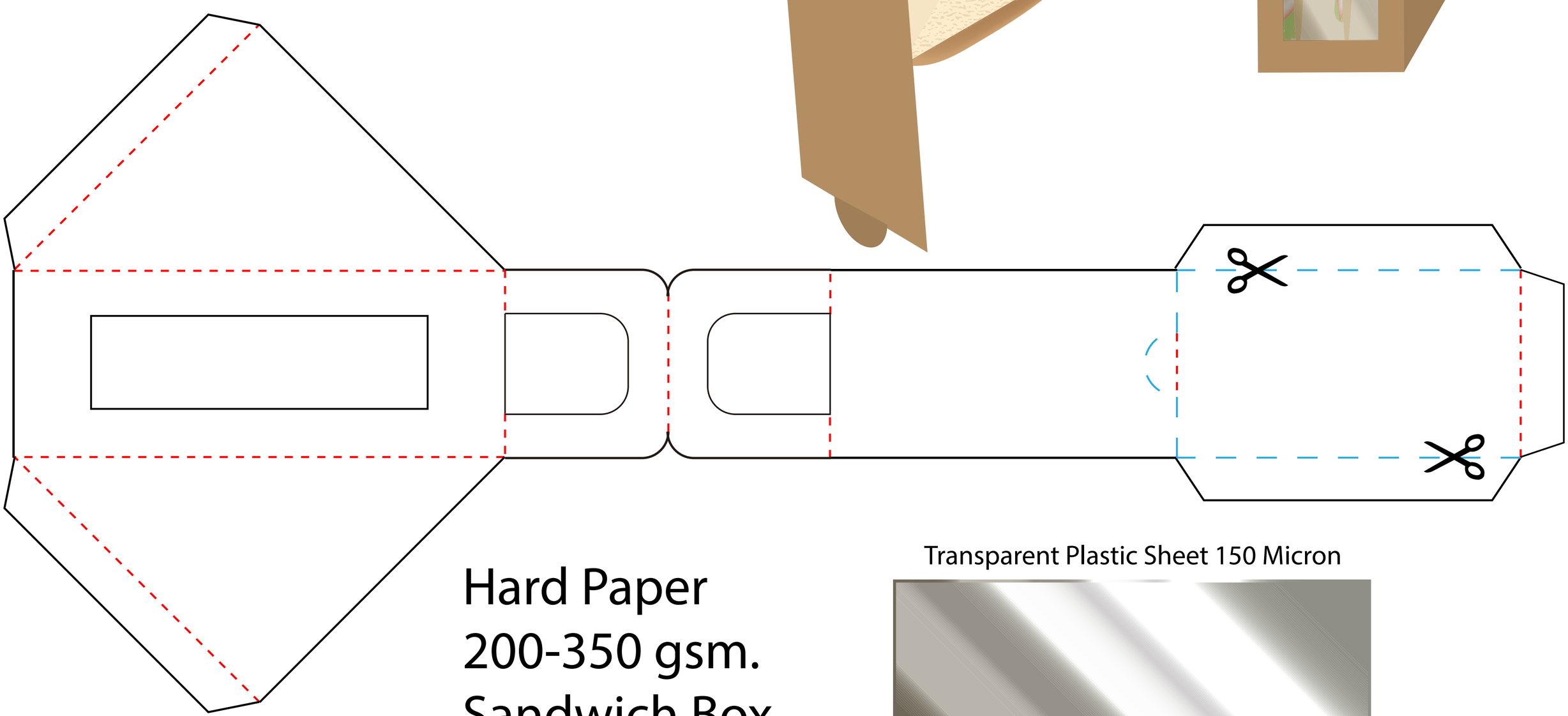

Hard Paper
200-350 gsm.
Sandwich Box

Transparent Plastic Sheet 150 Micron

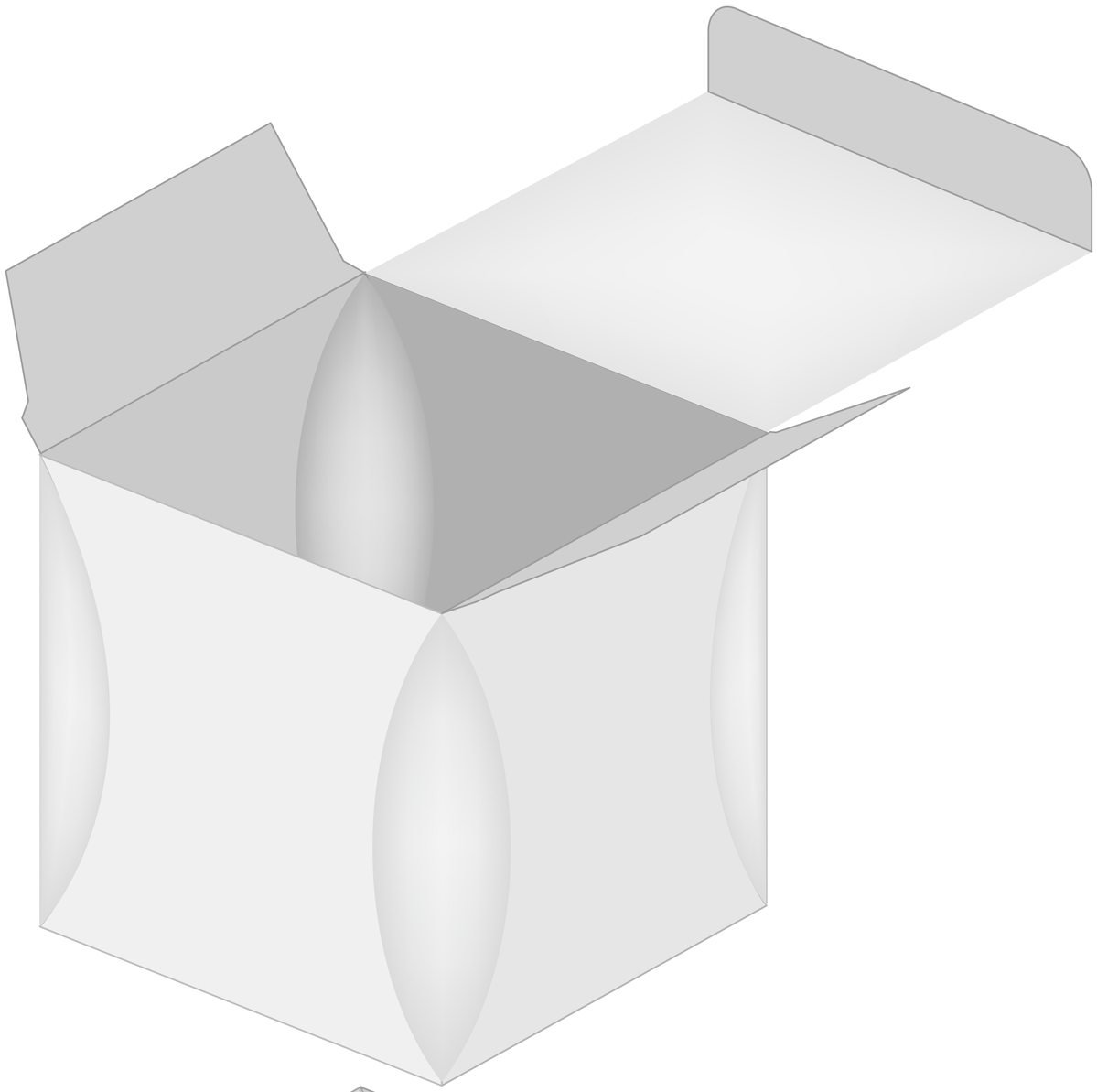

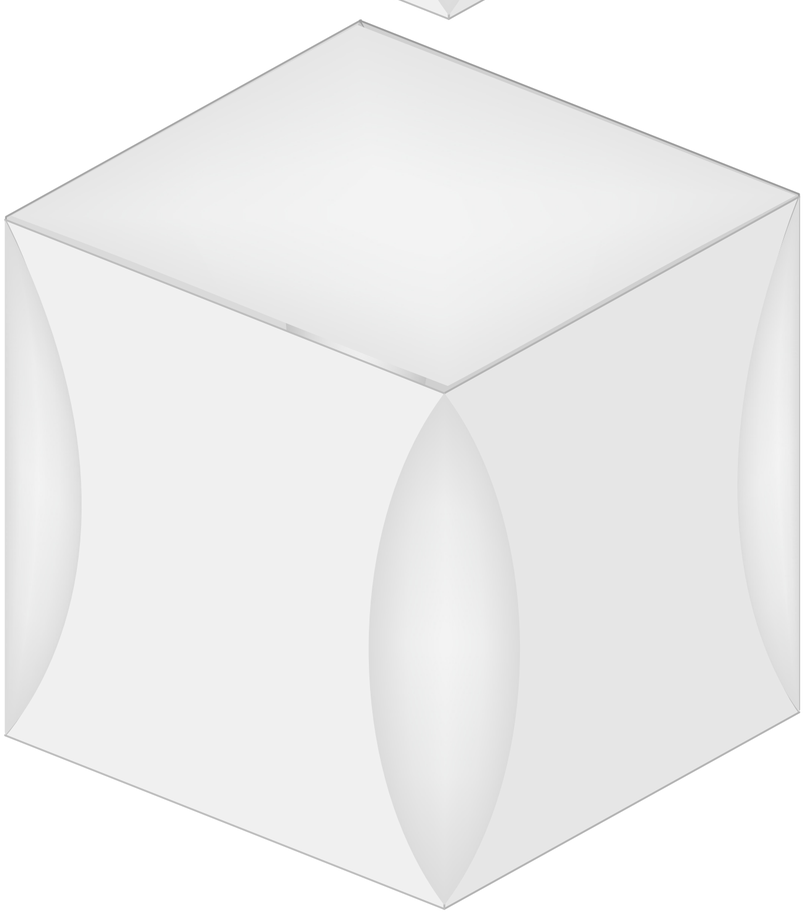

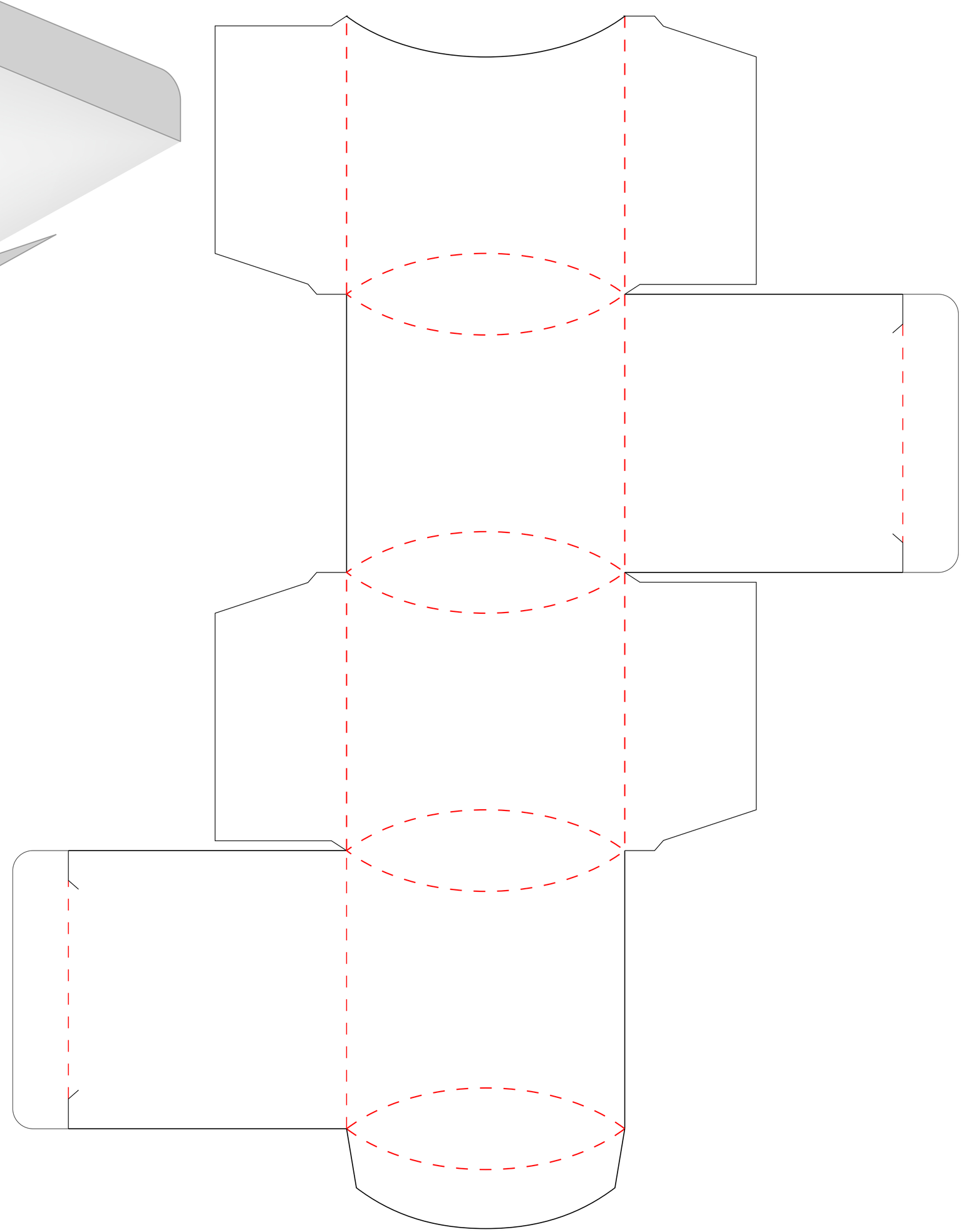

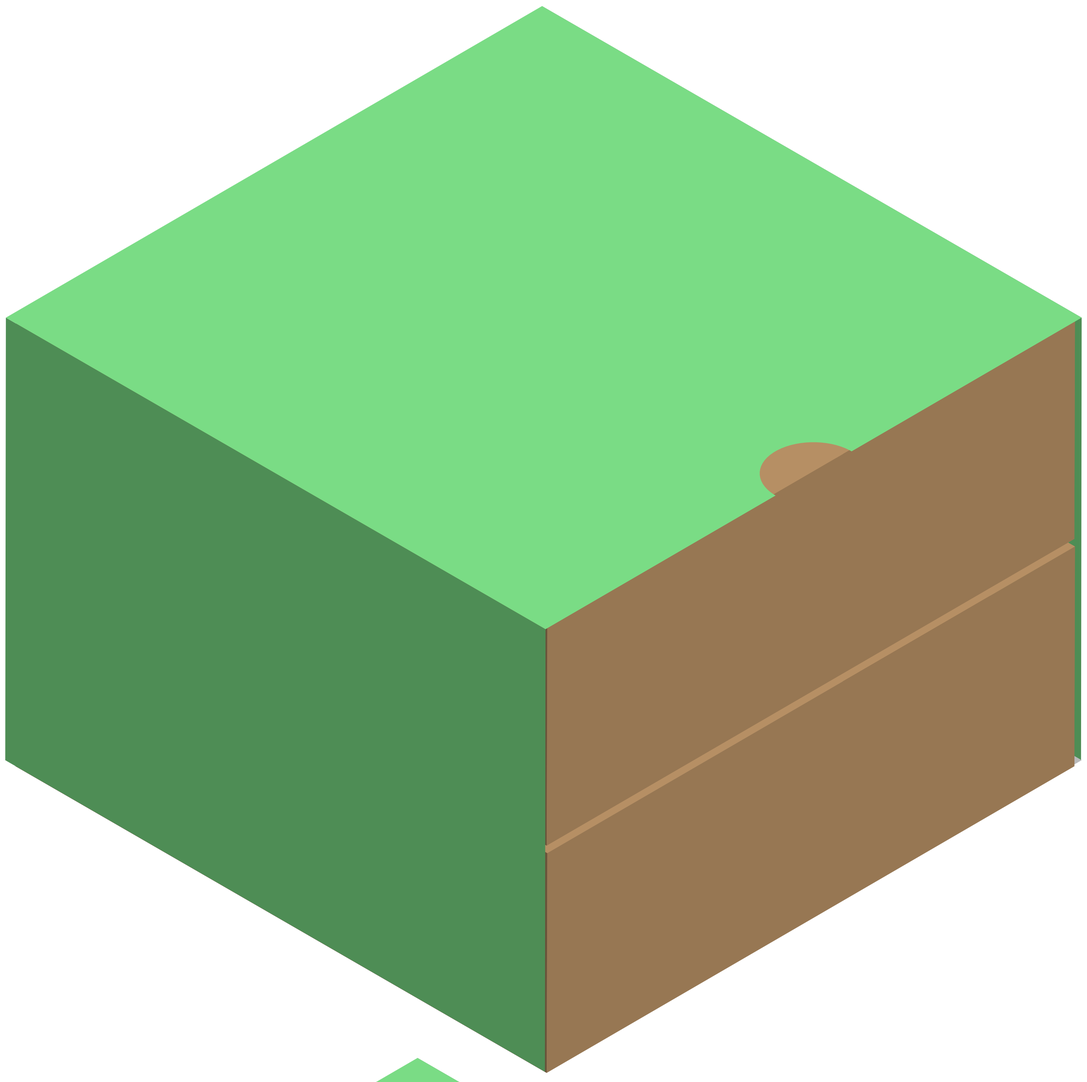

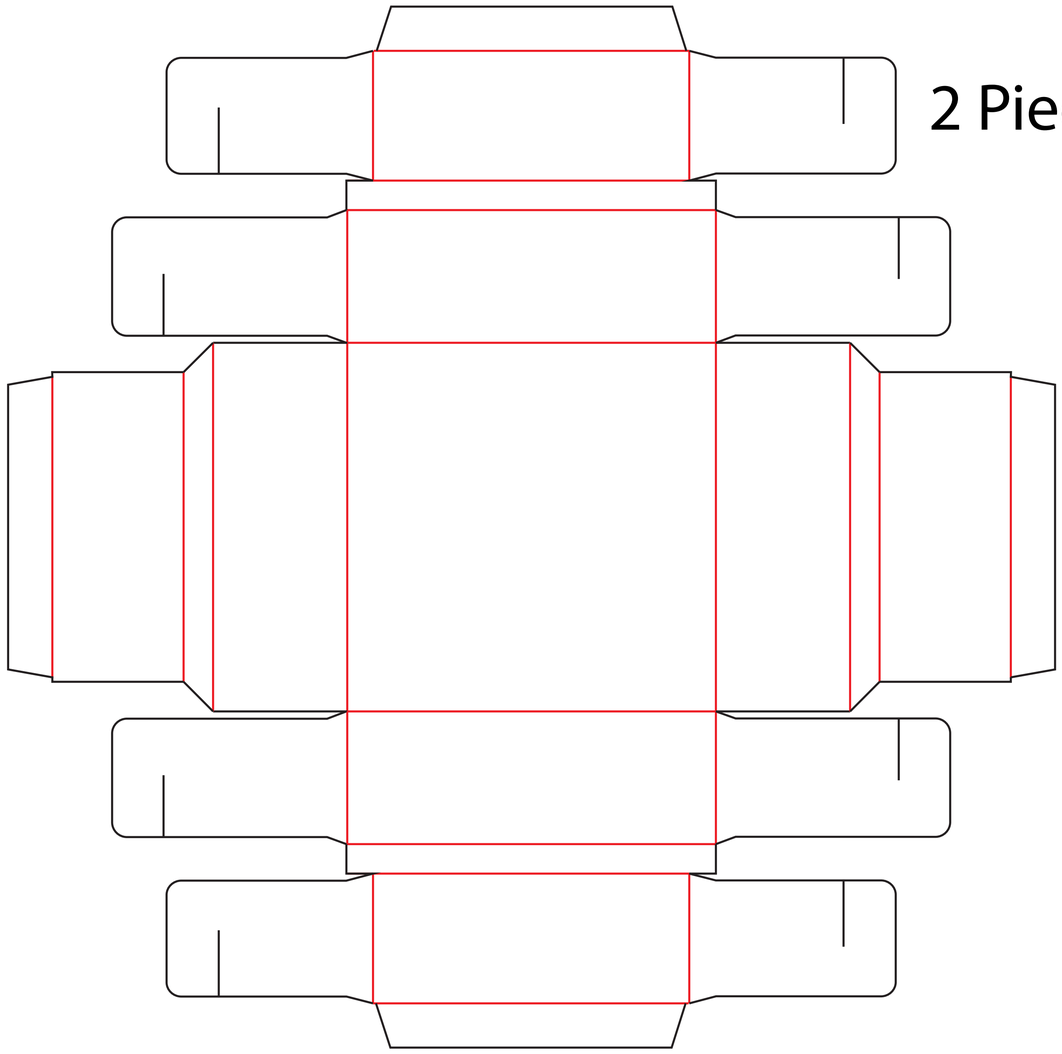
2 Piece

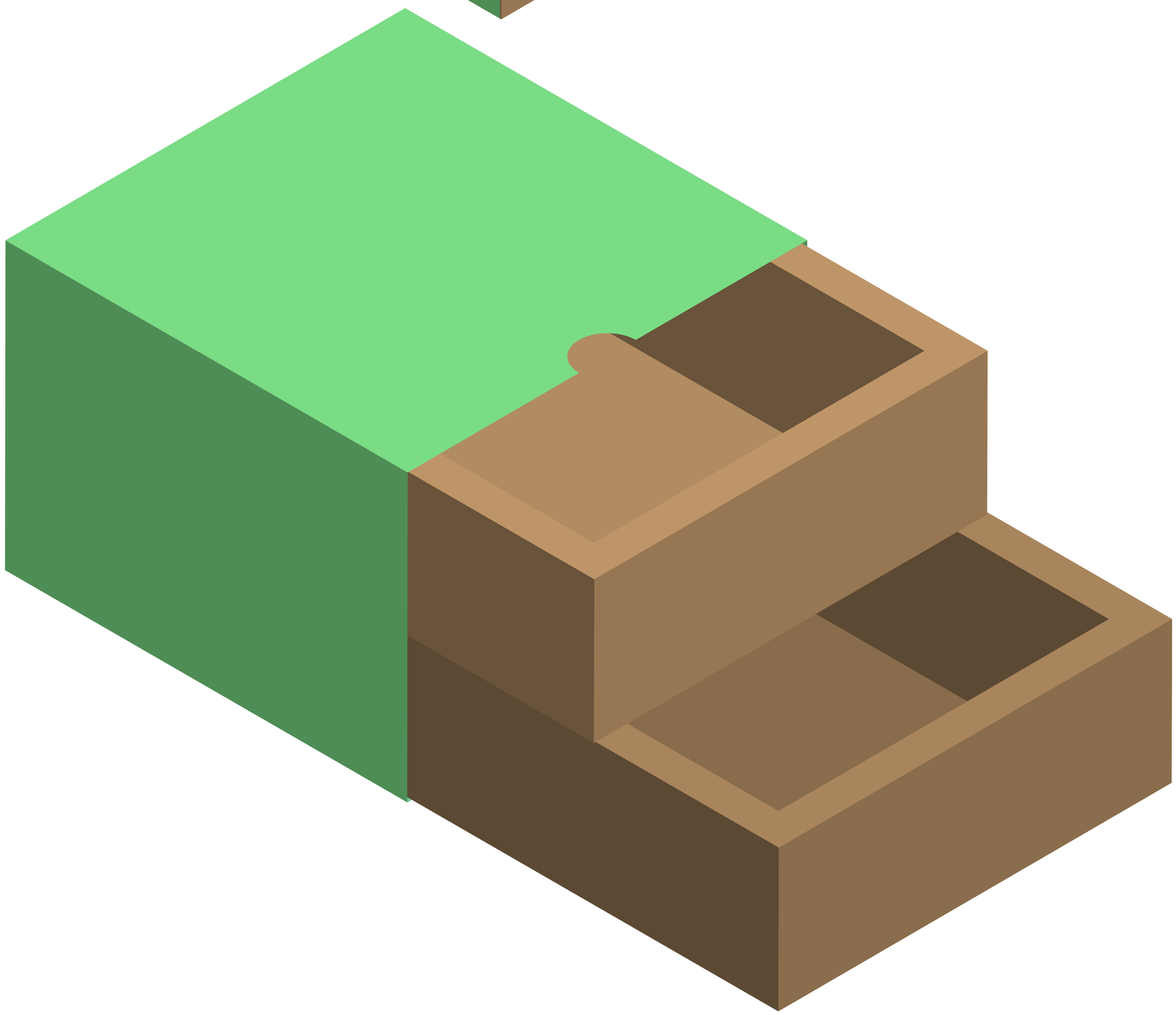

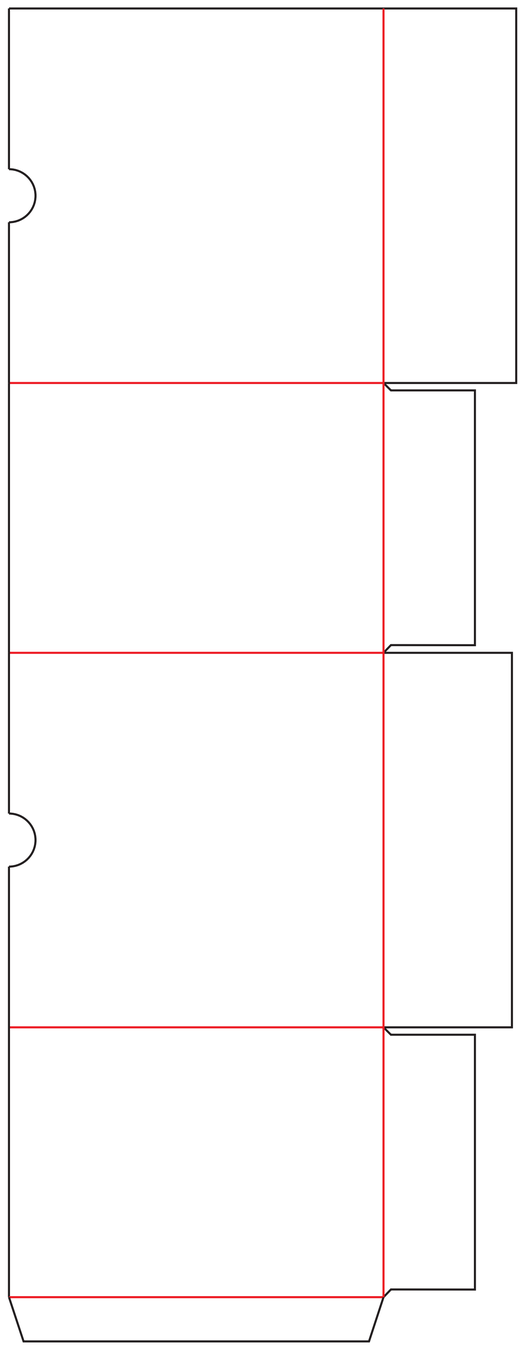

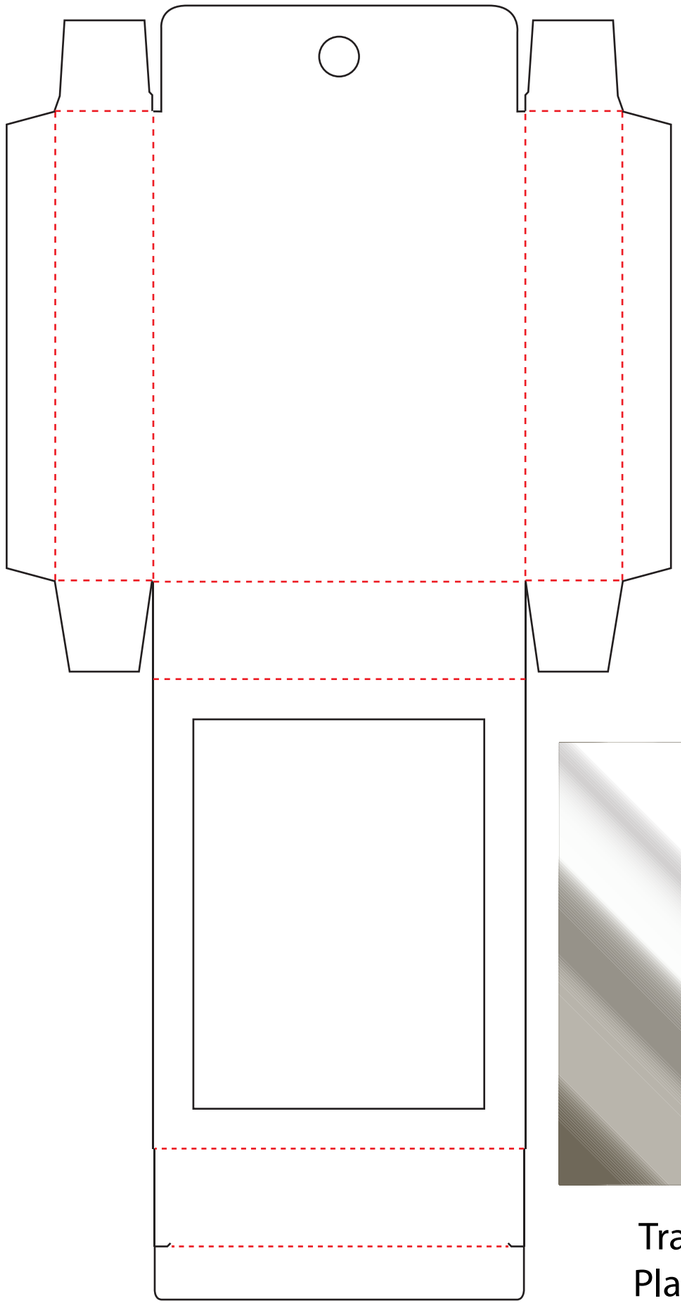

Or

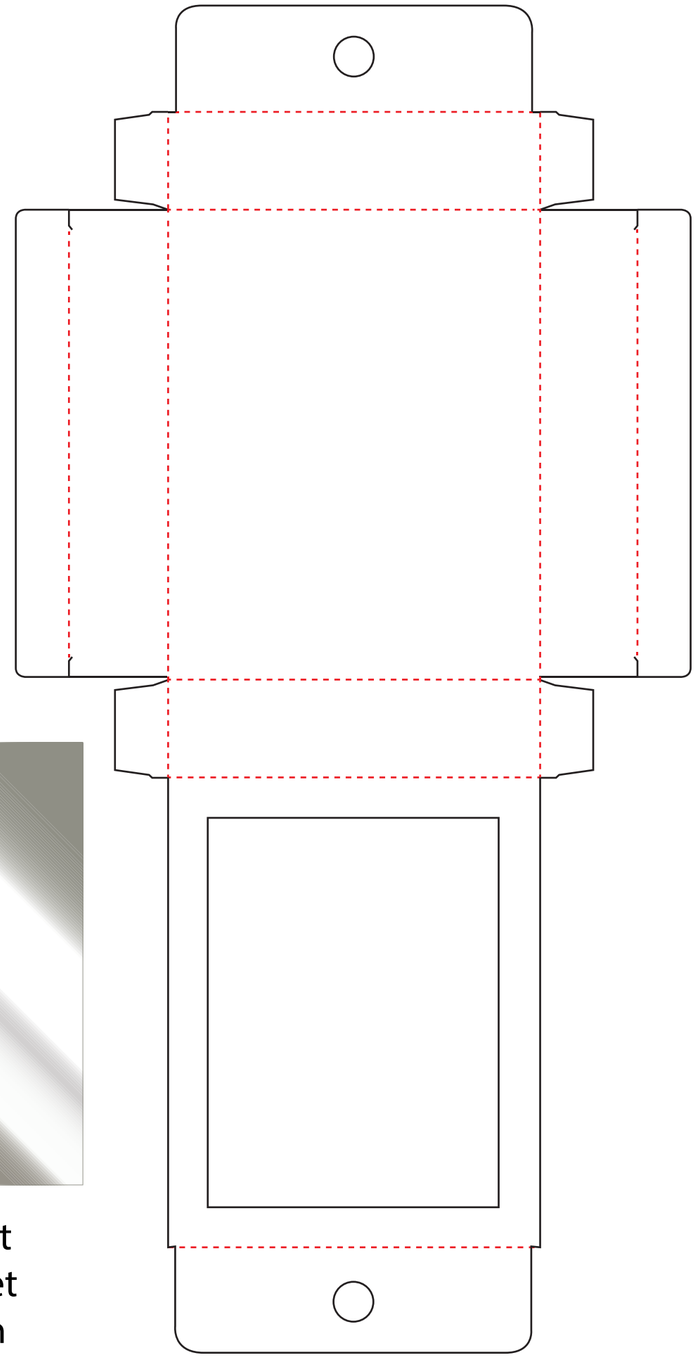

Transparent
Plastic Sheet
150 Micron

Hard Paper 200-350 gsm

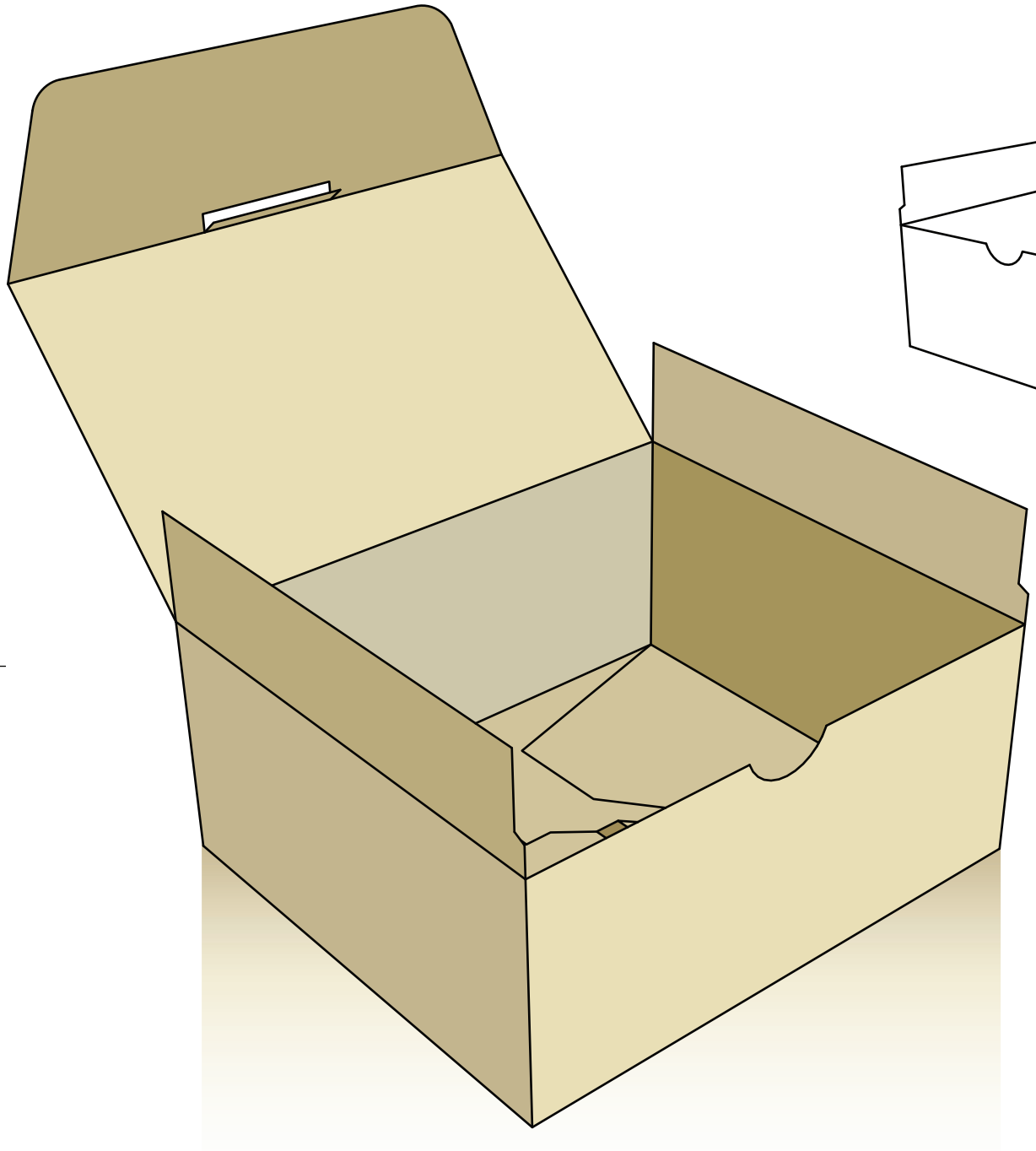

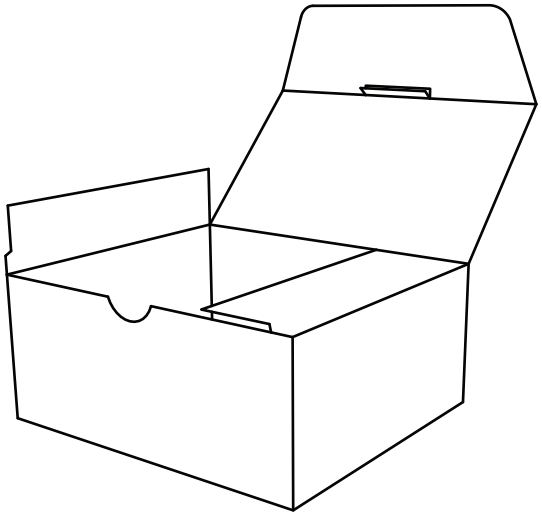

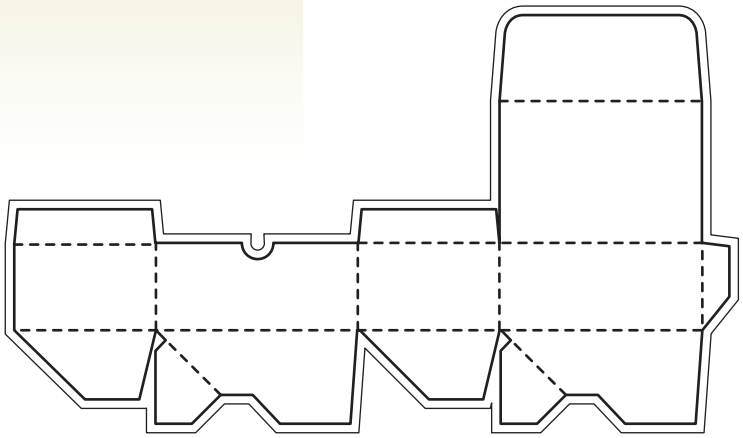

printing bleed

die-cuting line

folding line

perforaion line

zipper line

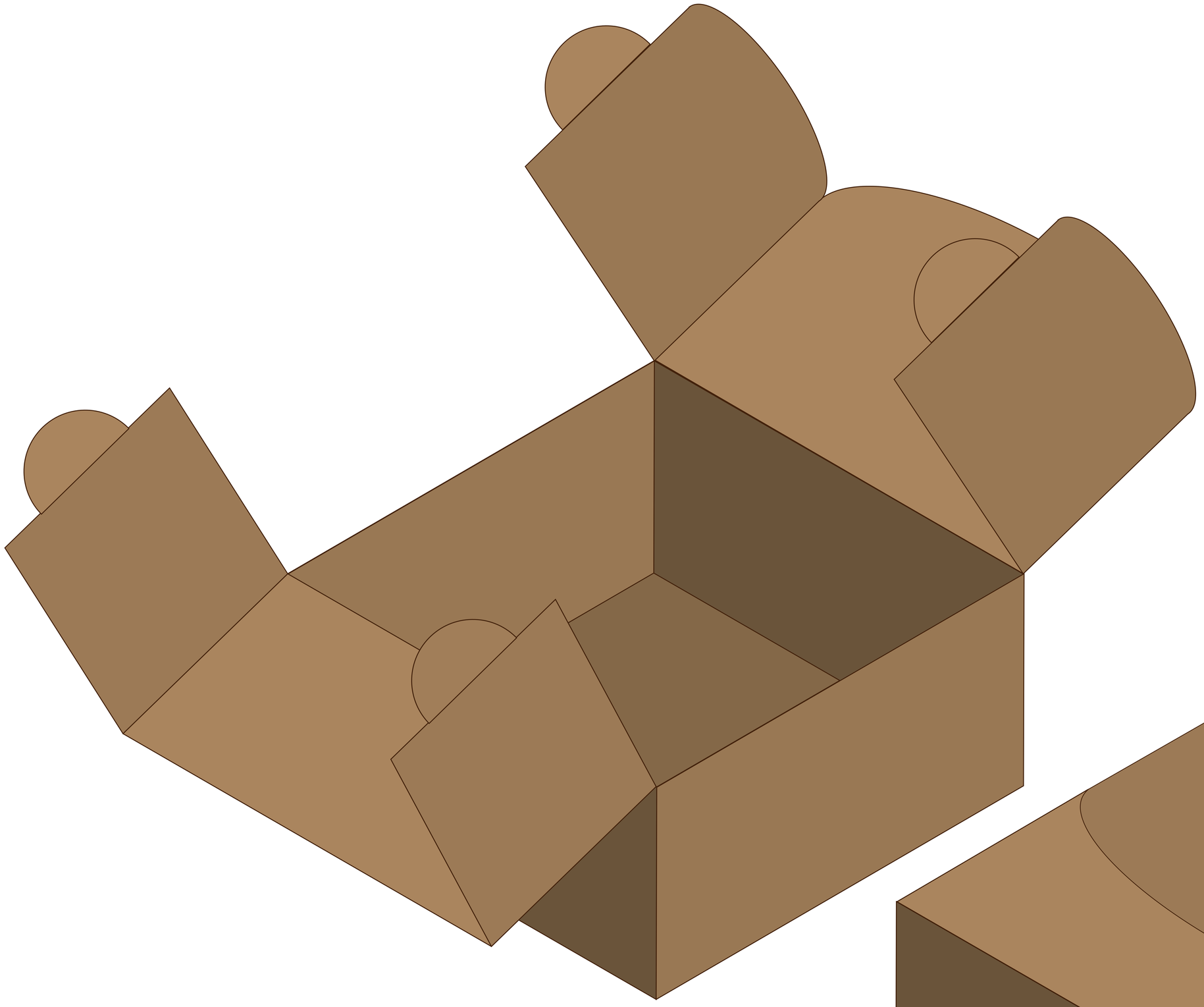

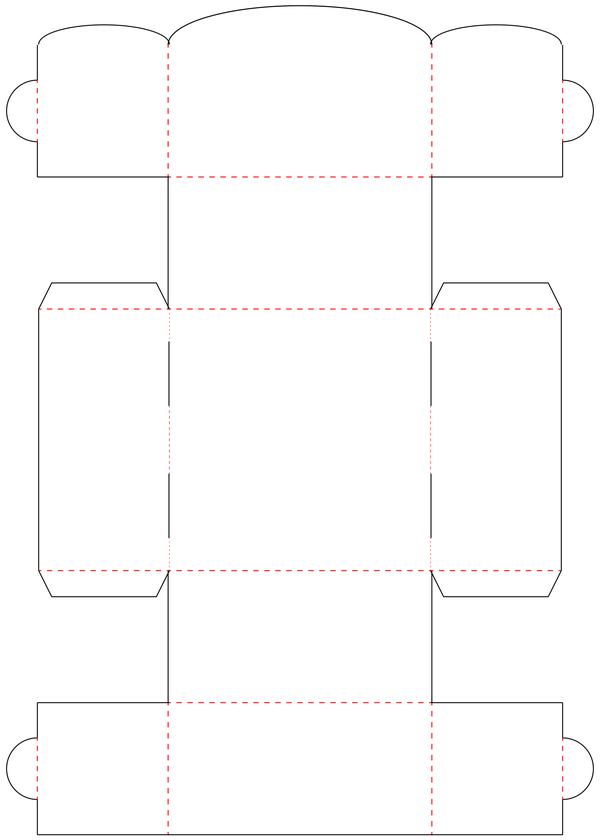

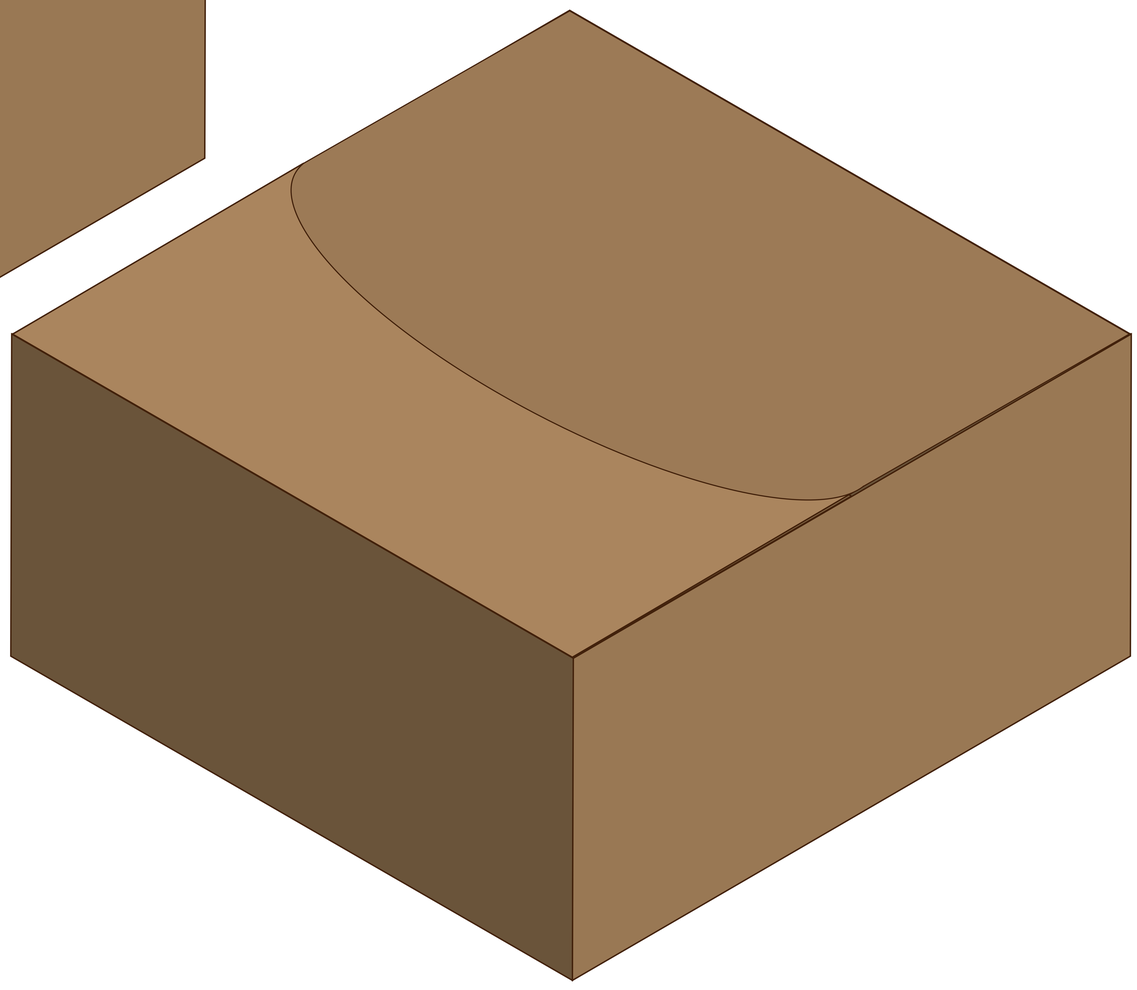

Logo
Brand
Name

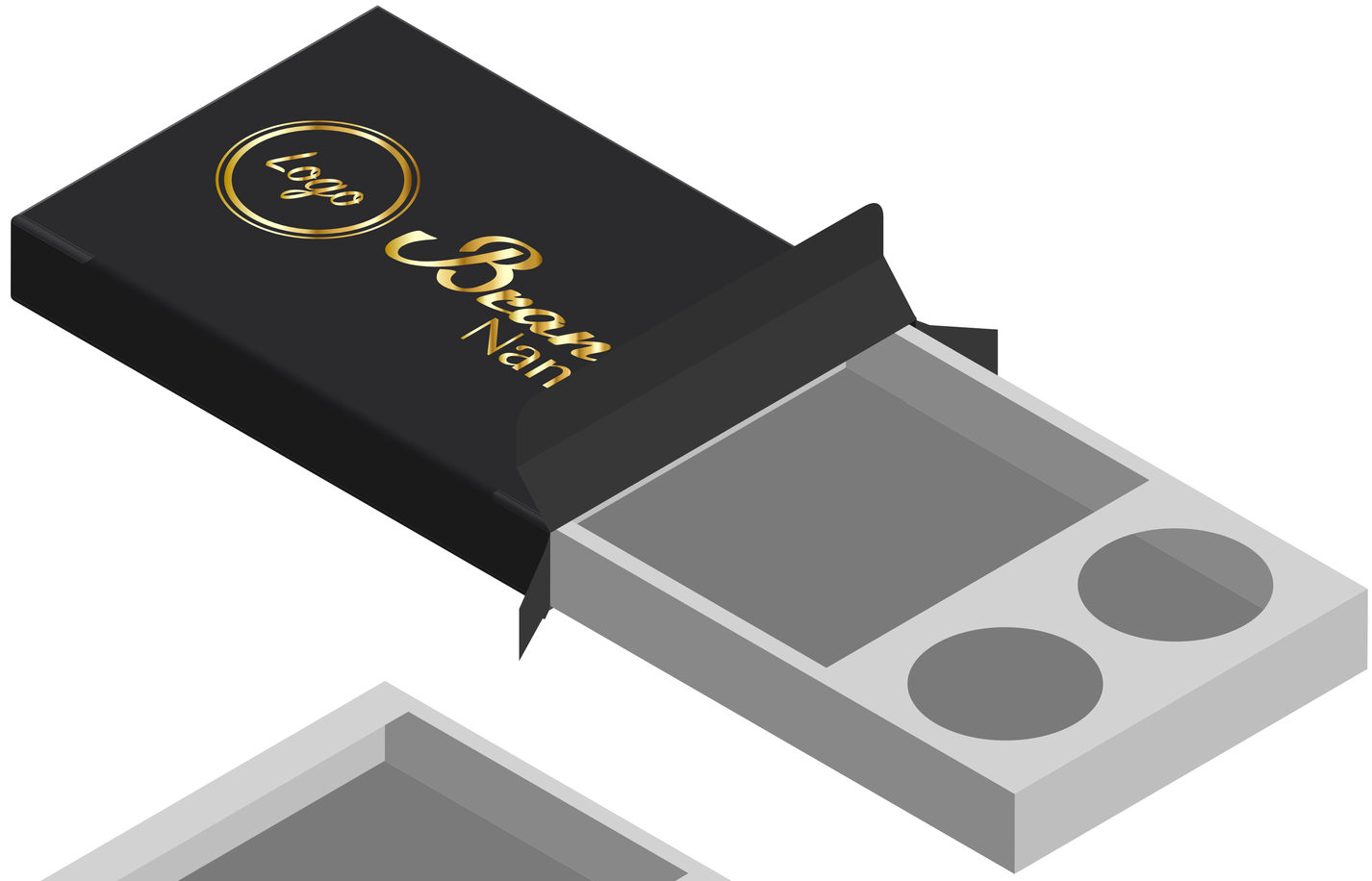
Logo
Bean
Nan

Logo
Bean
Nan

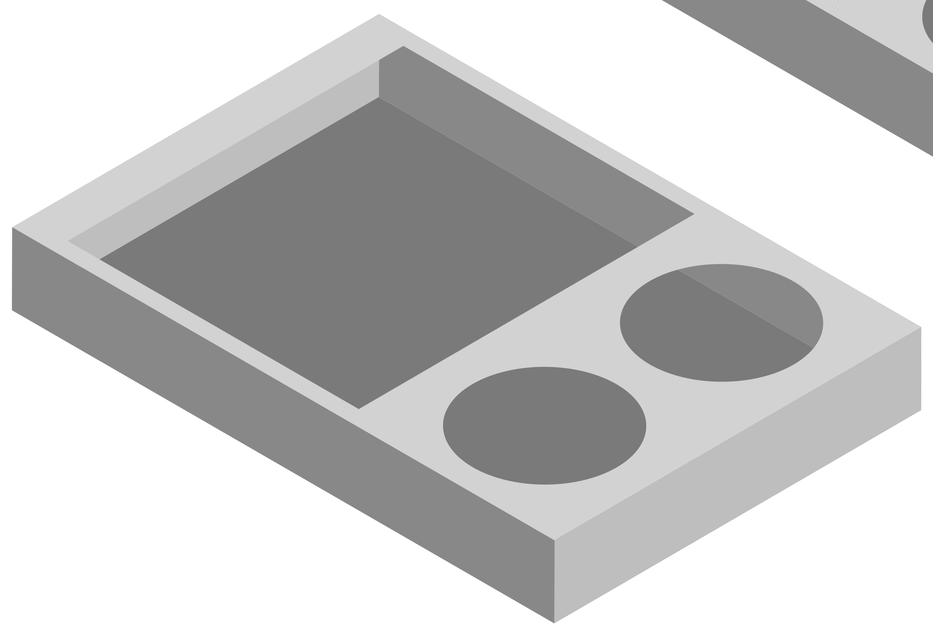

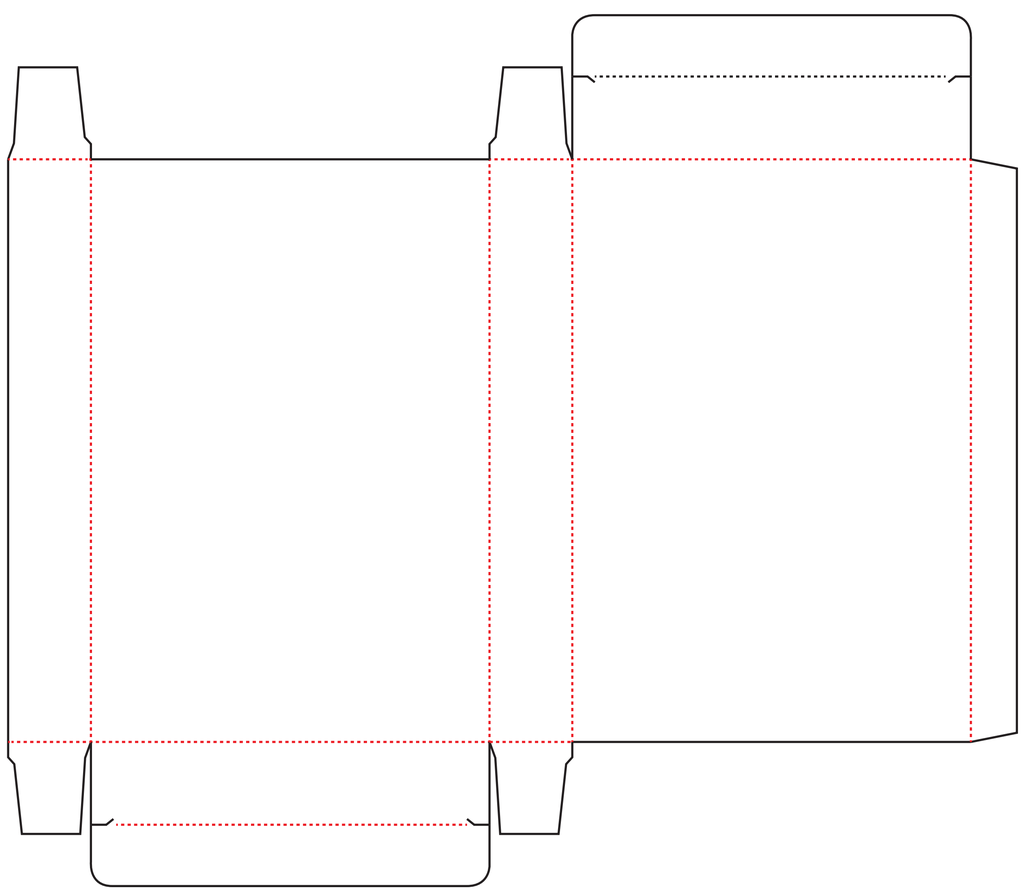

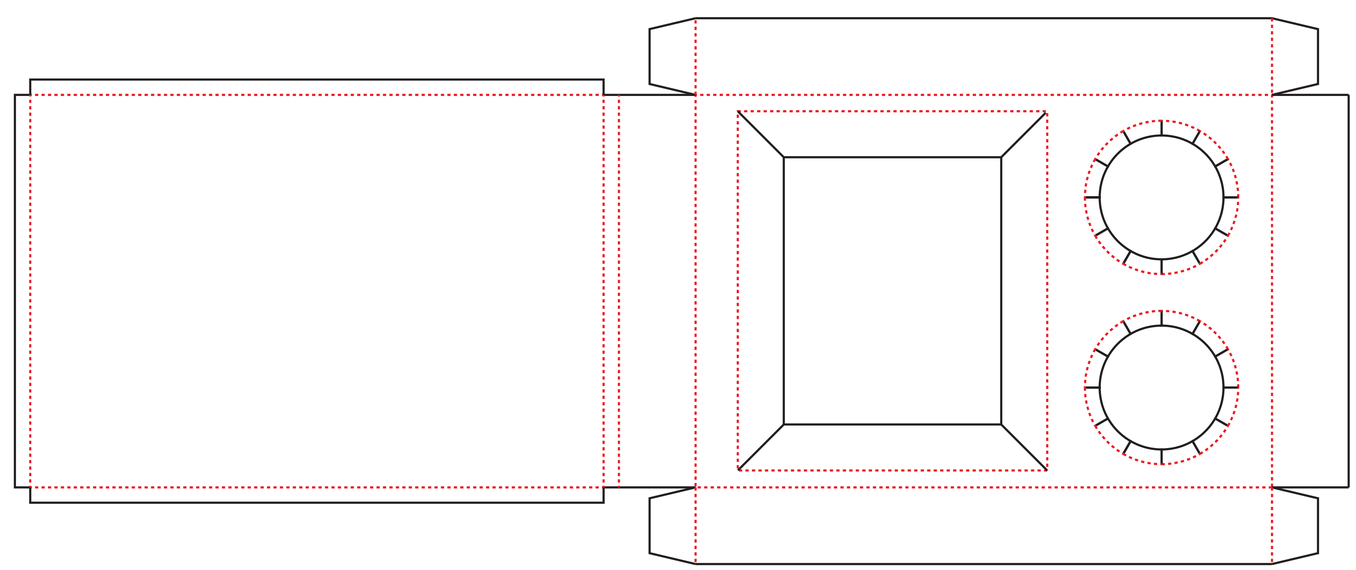

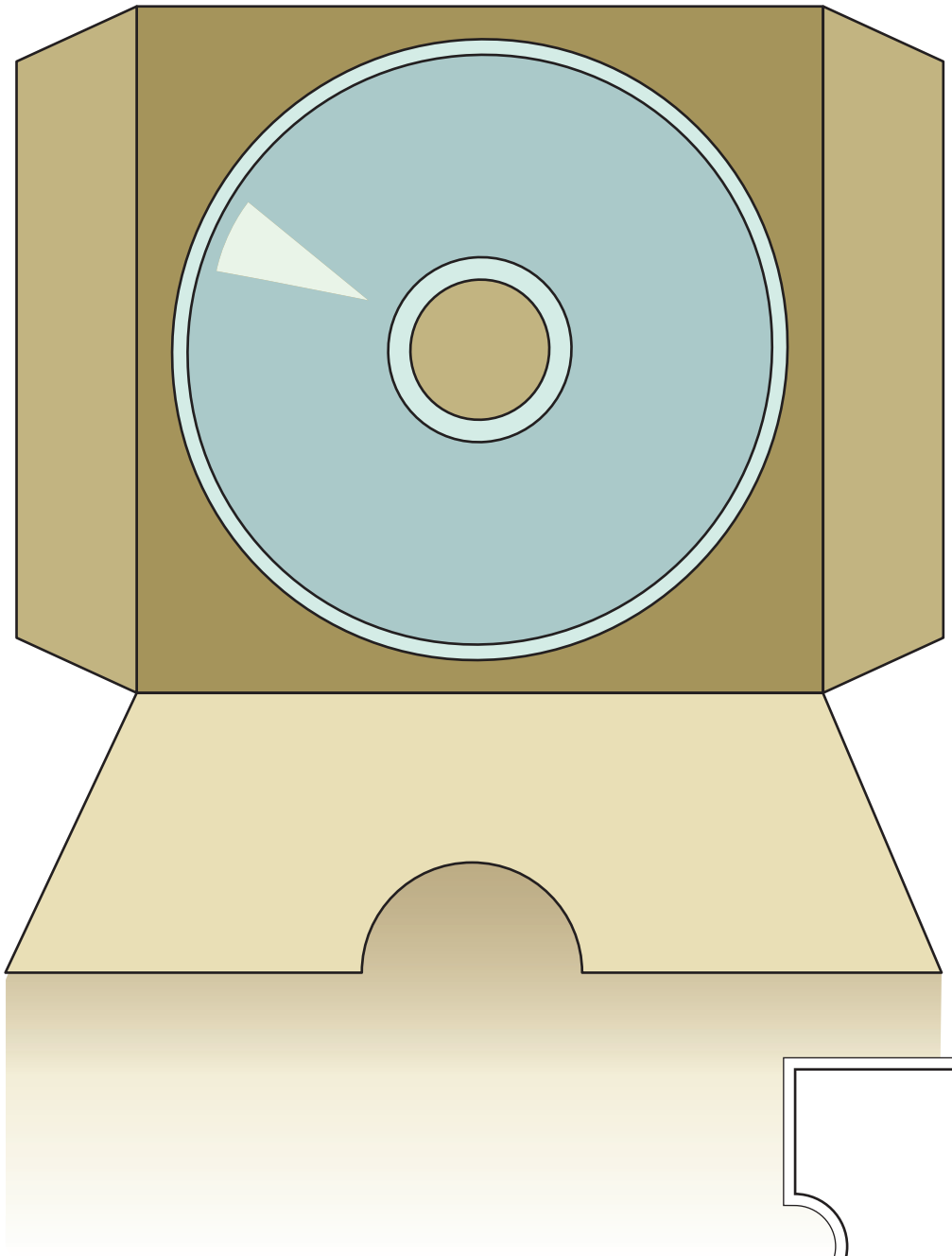

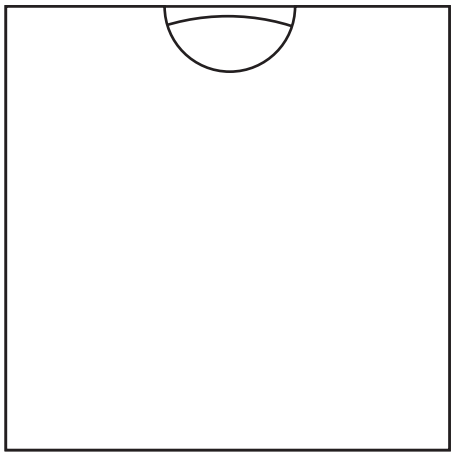

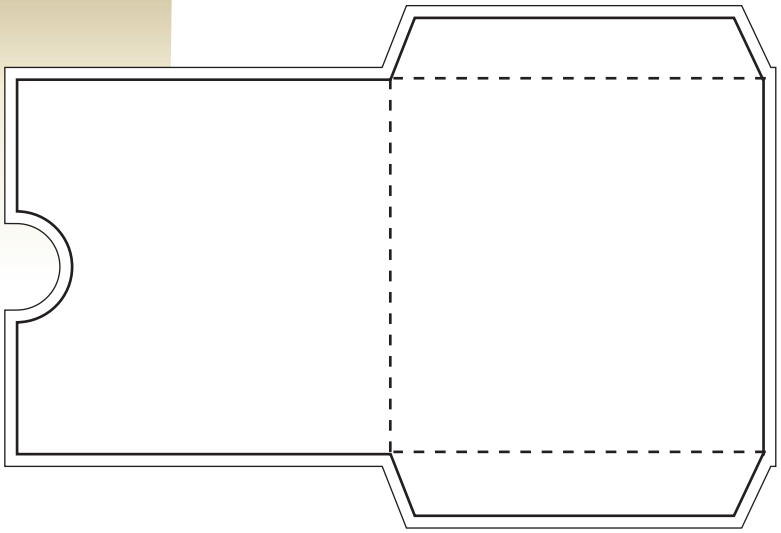

printing bleed

die-cuting line

folding line

perforaion line

zipper line

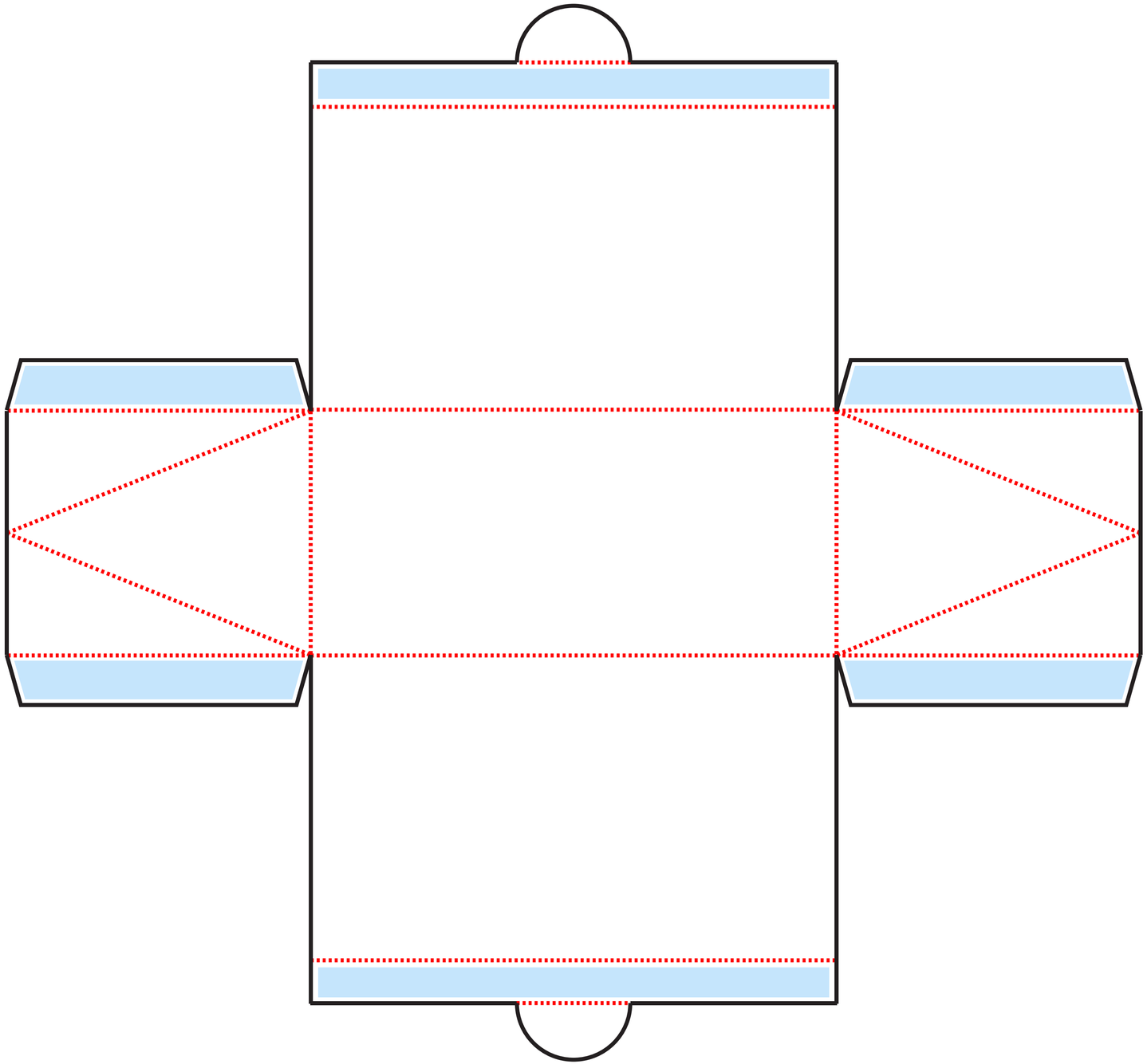

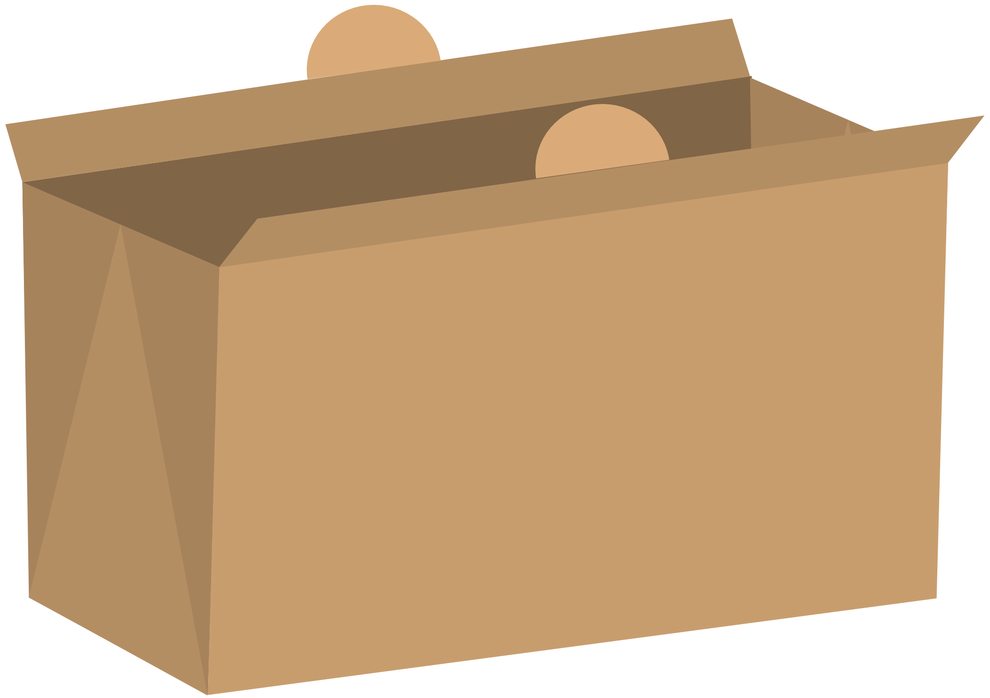

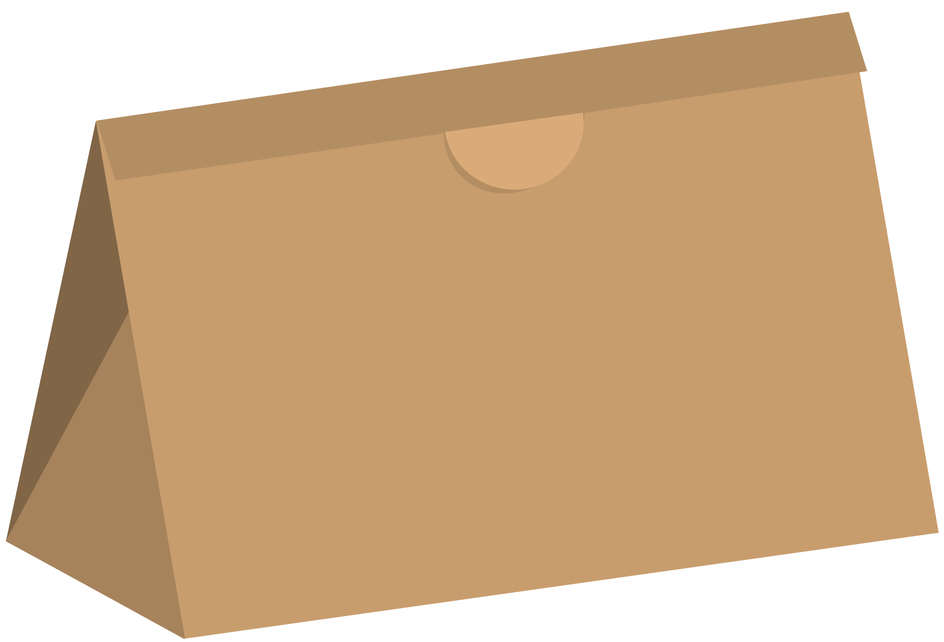

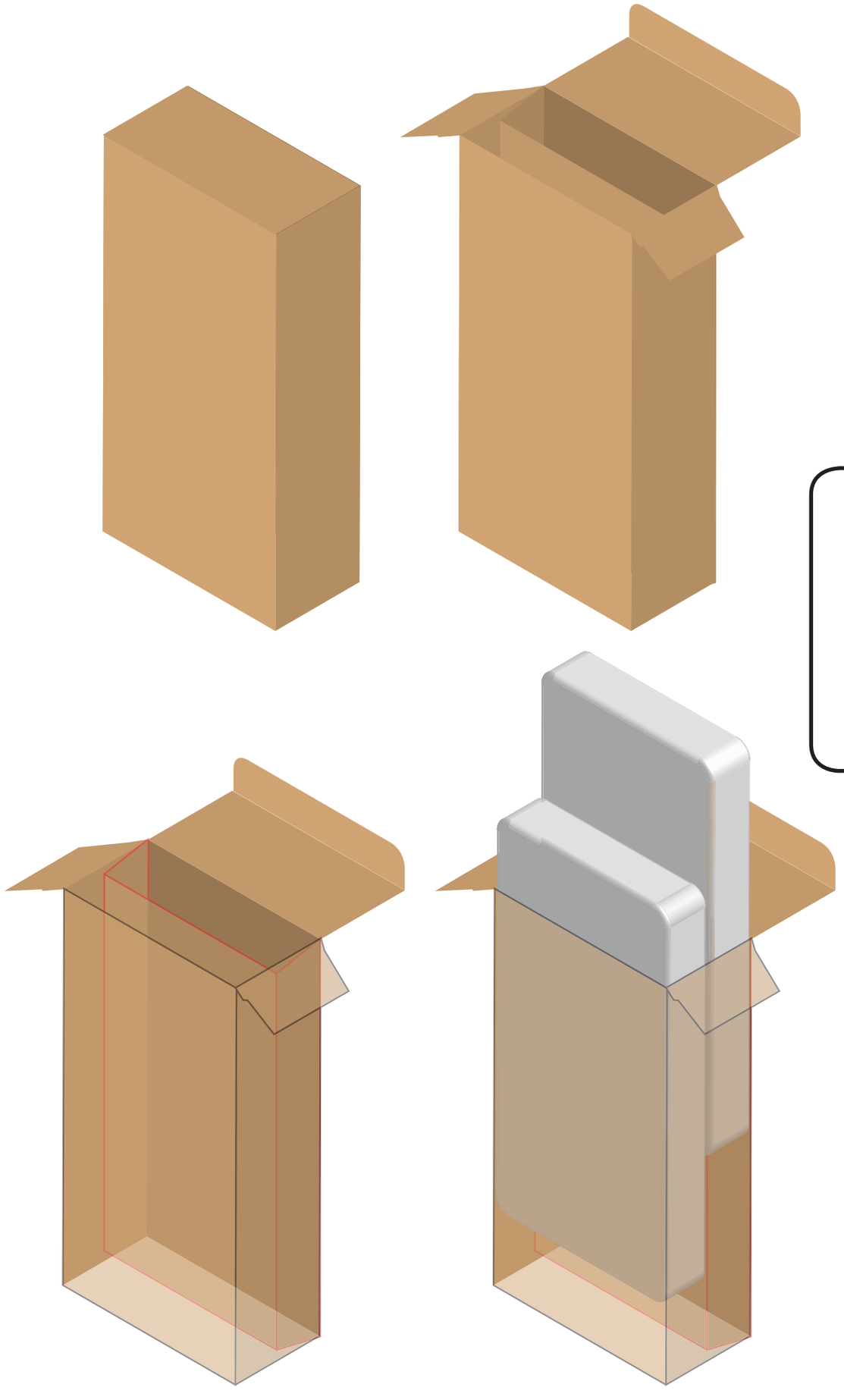

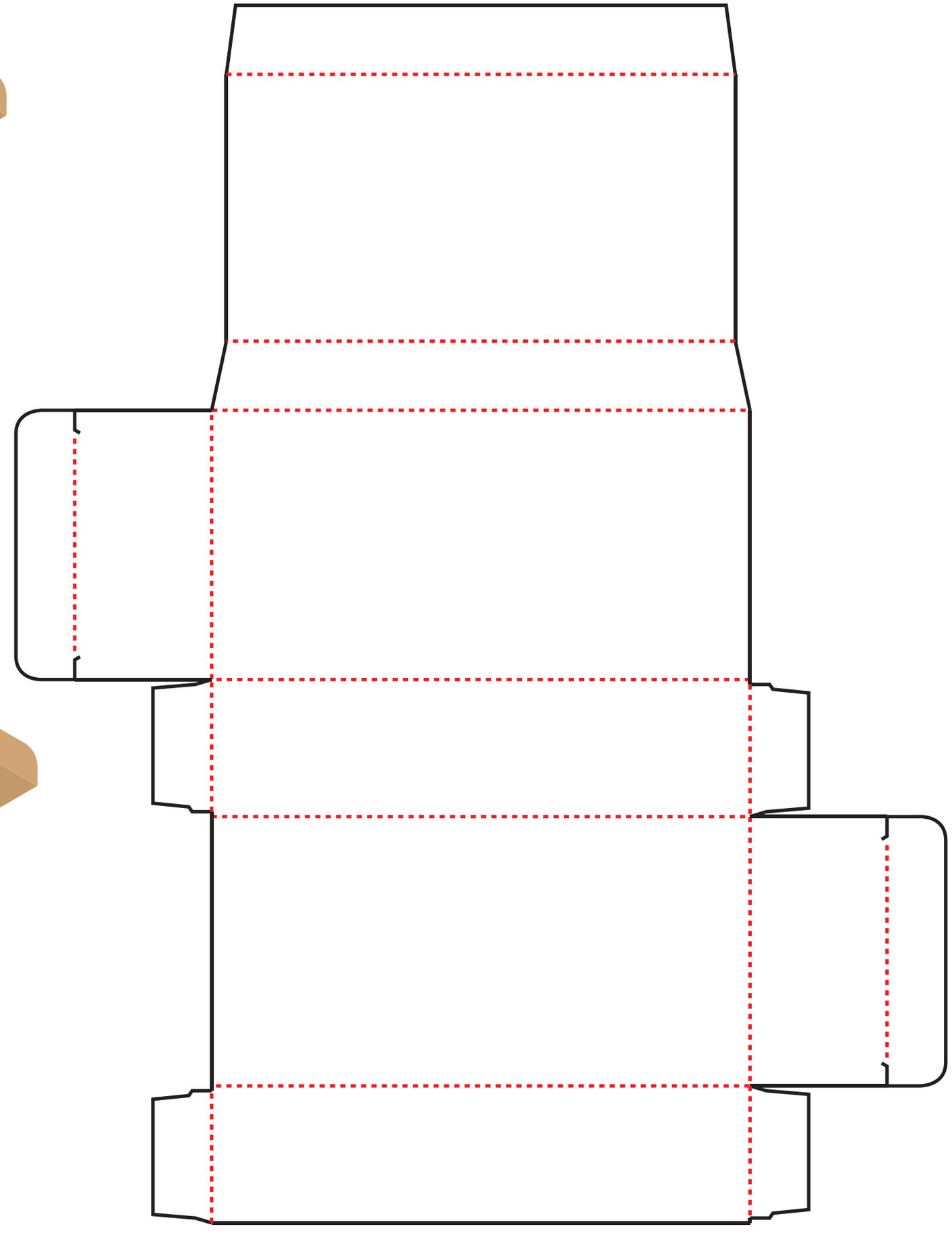

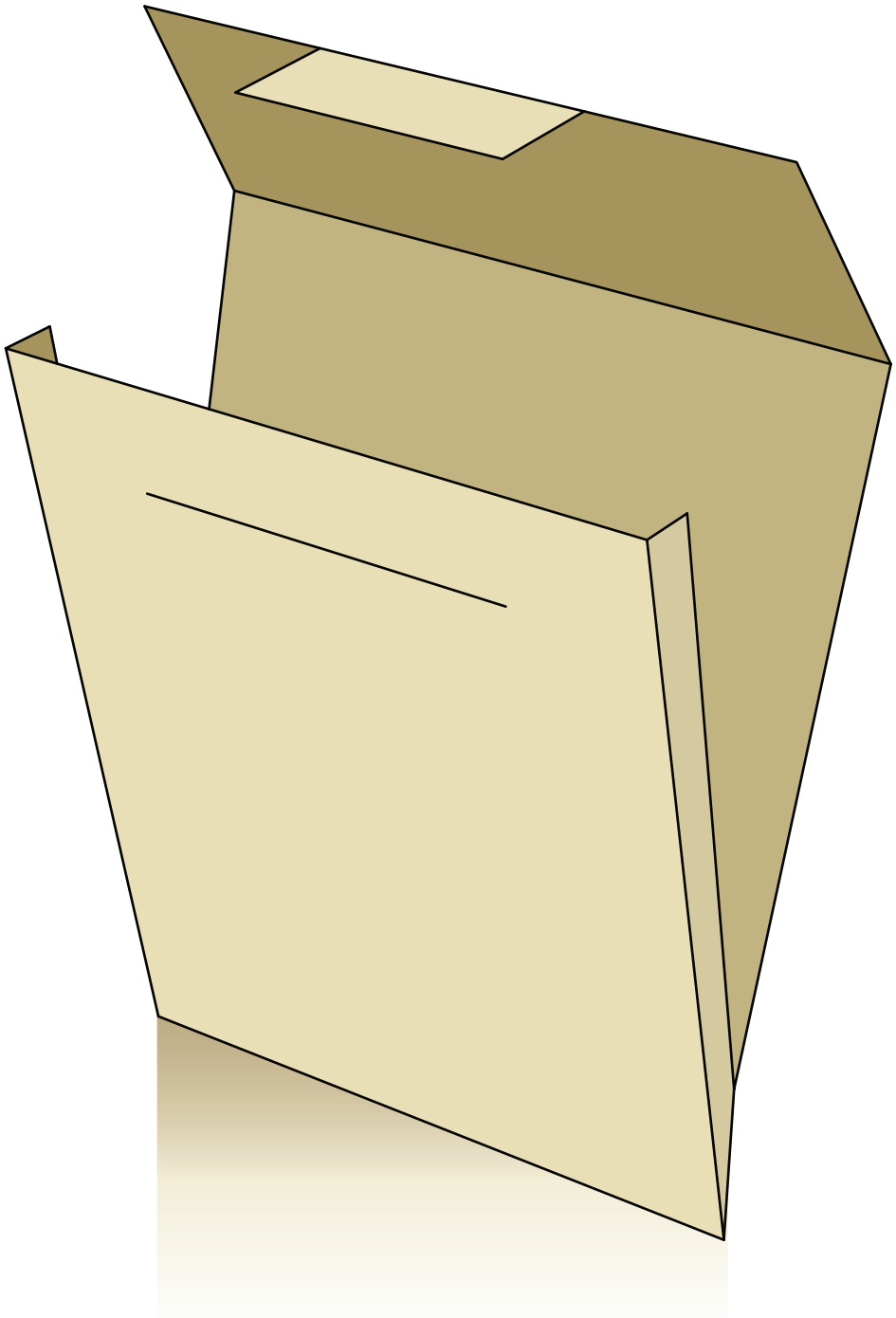

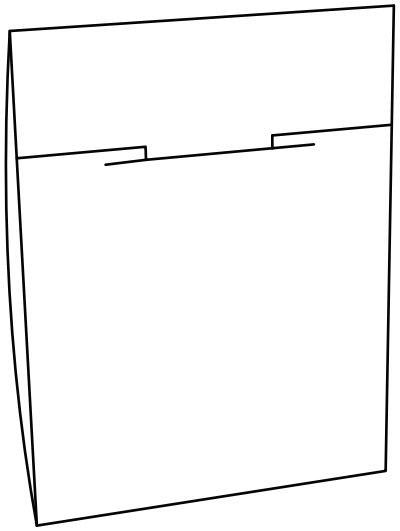

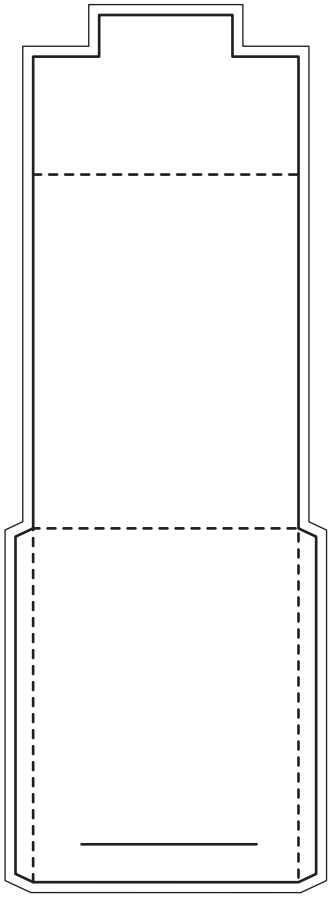

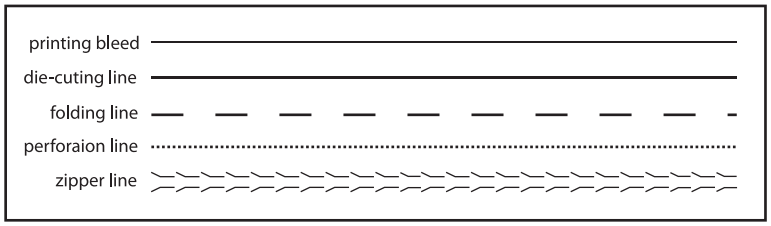
printing bleed
die-cuting line
folding line
perforaion line
zipper line

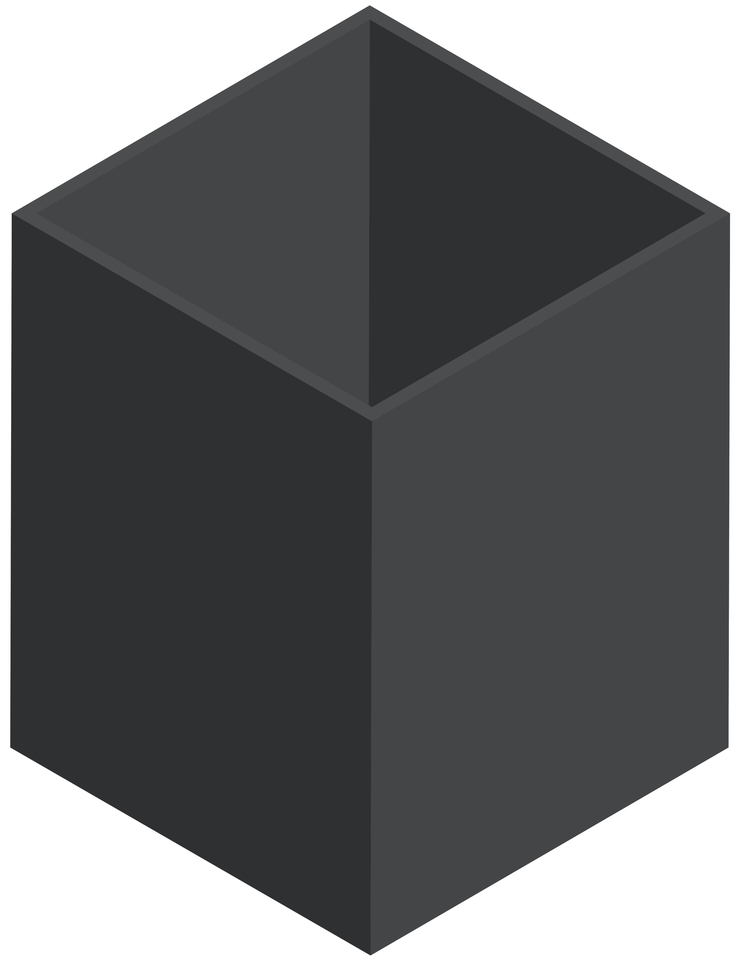

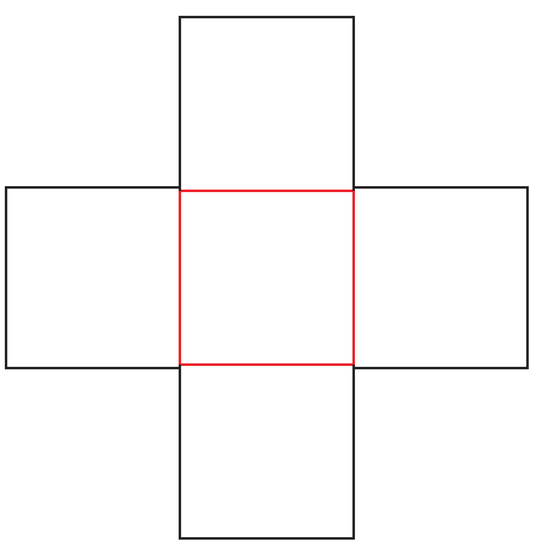

Hard Board Paper
Thick 0.2 cm
Top Box

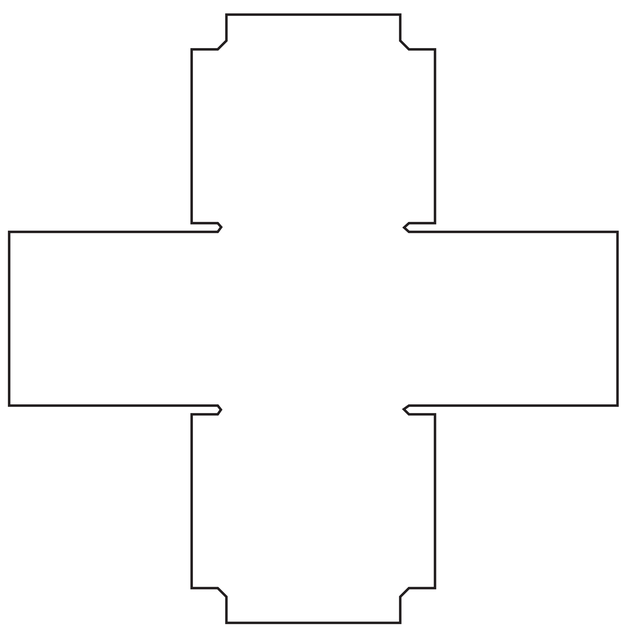

Wrapping Paper
Top Box

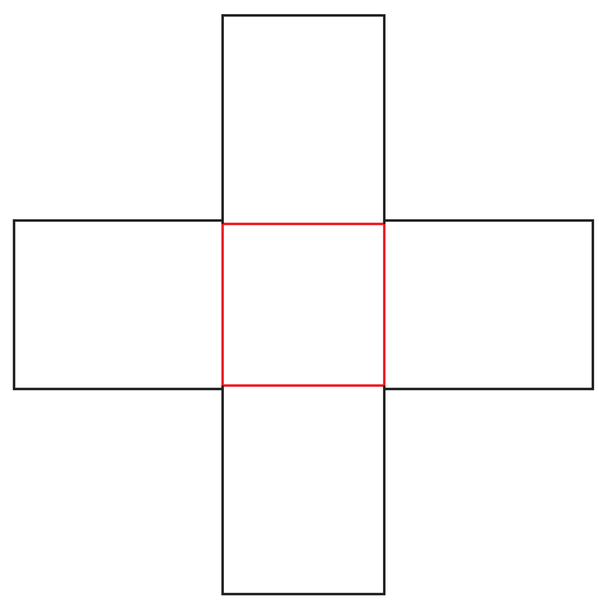

Hard Board Paper
Thick 0.2 cm
Bottom Box

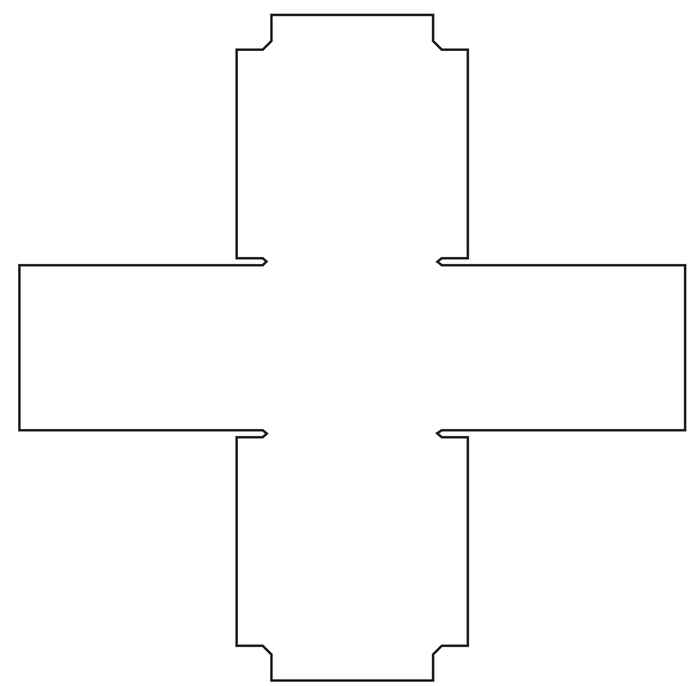

Wrapping Paper
Bottom Box

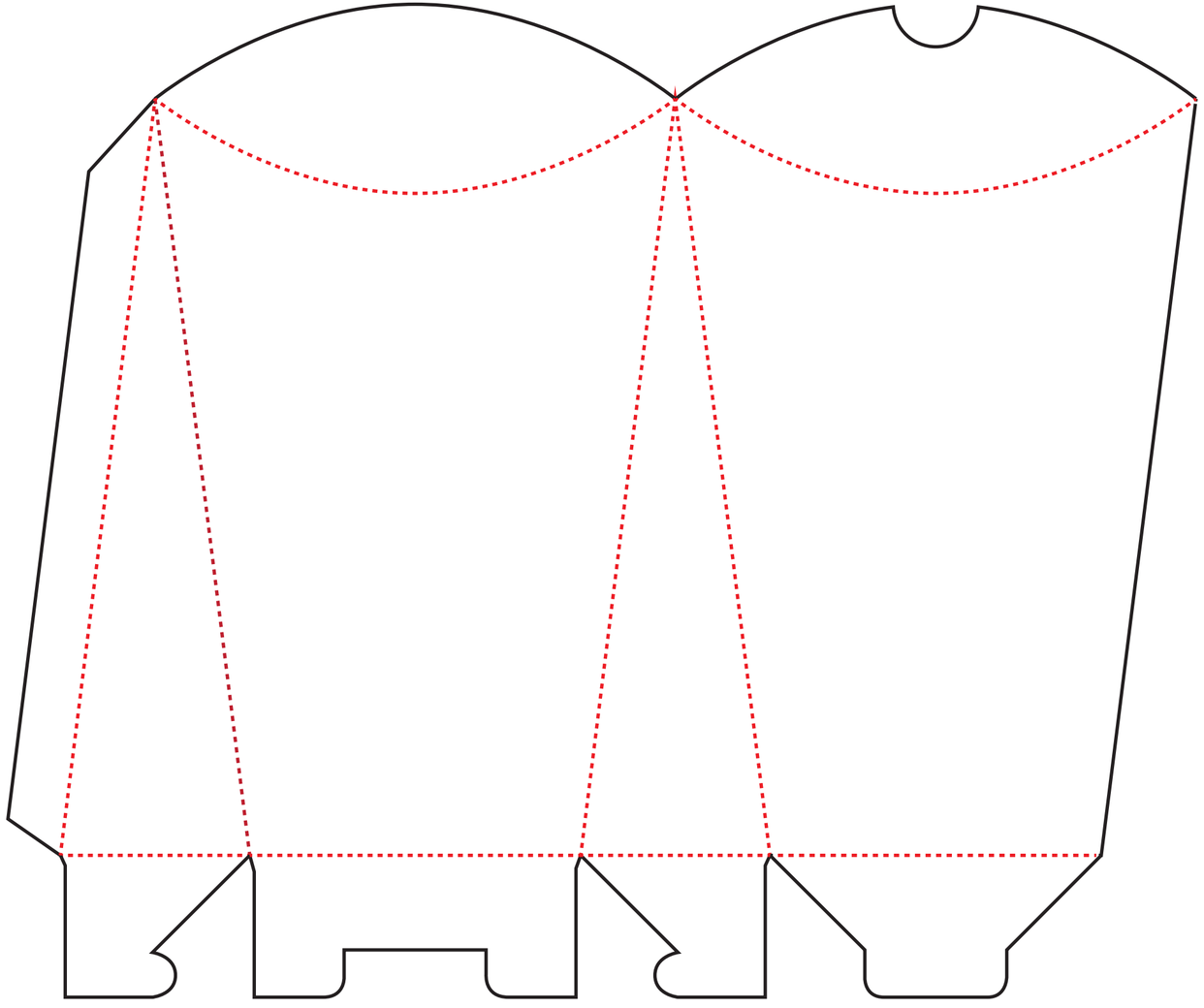

POPCORN

POPCORN

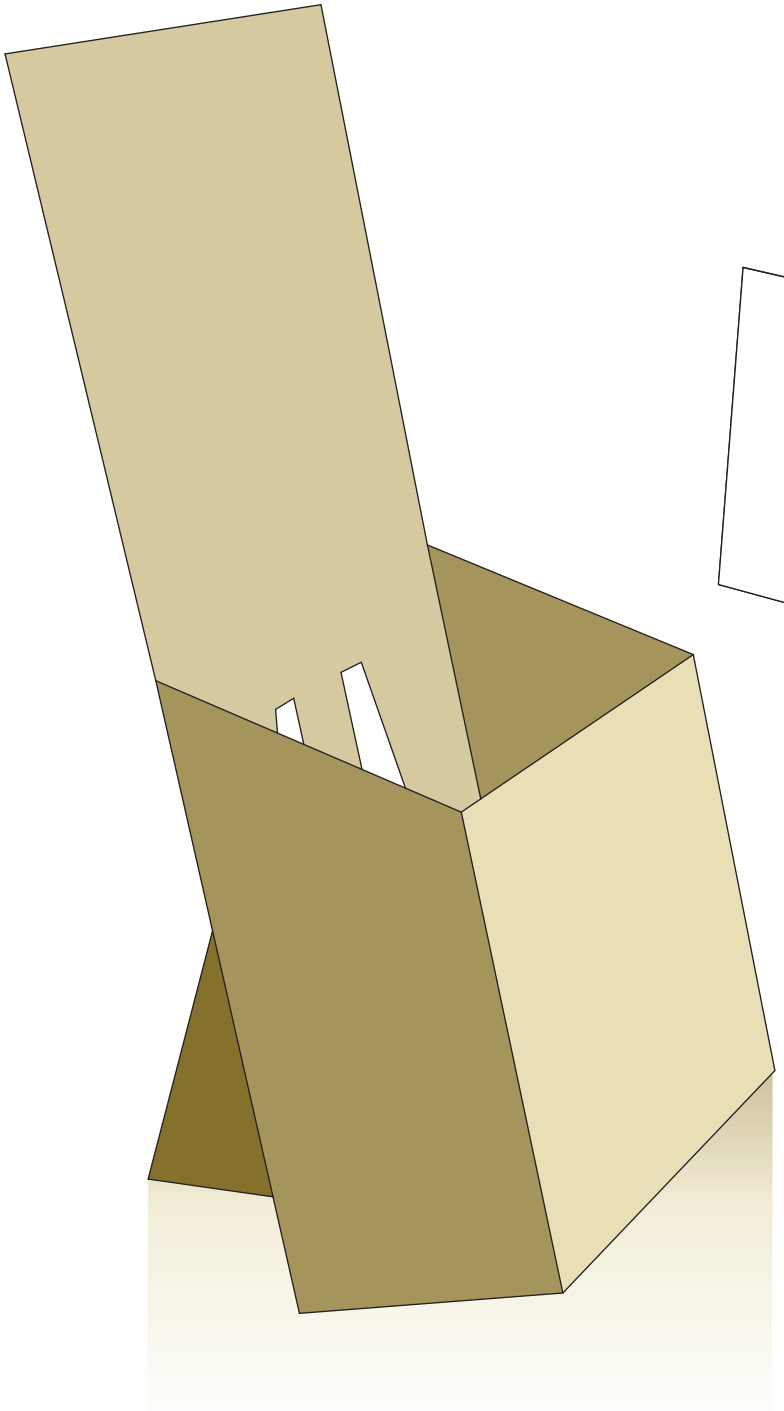

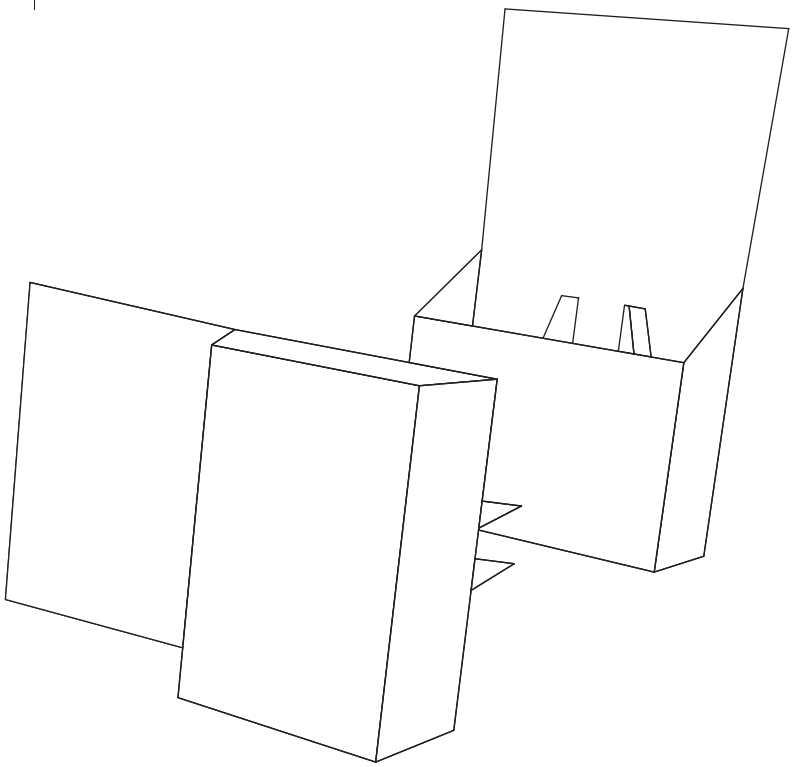

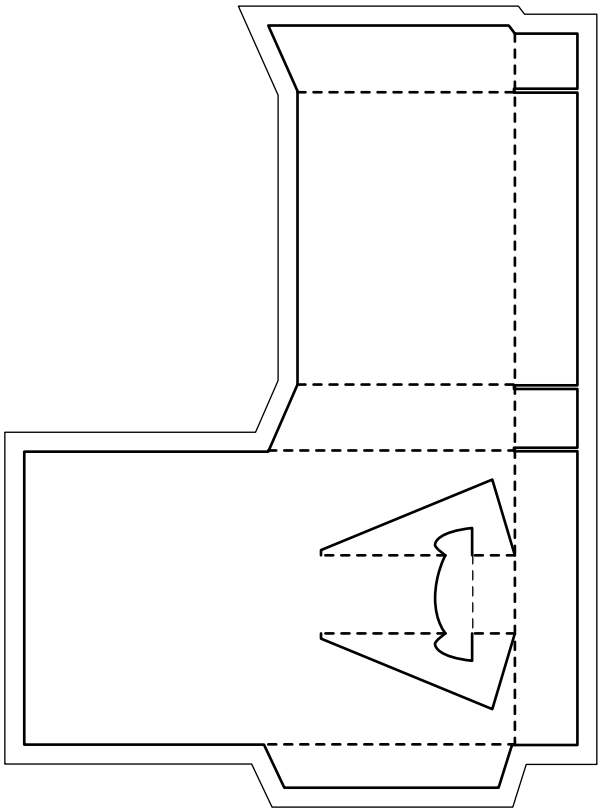

printing bleed

die-cuting line

folding line

perforaion line

zipper line

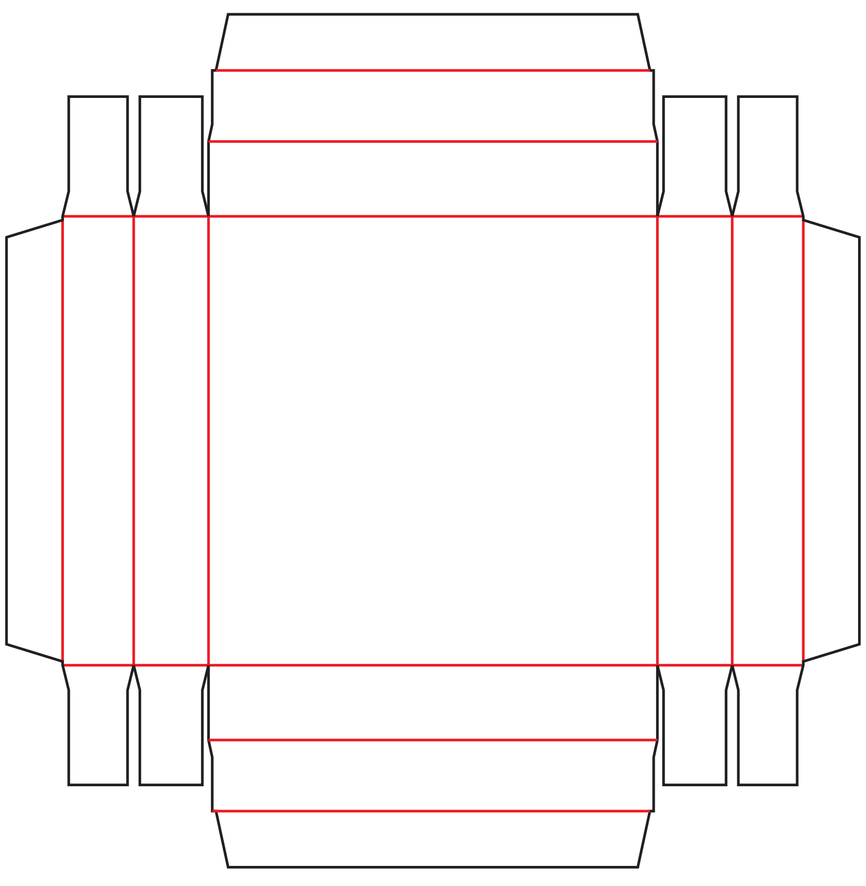

Hard Paper
200-300 gsm
Top Box

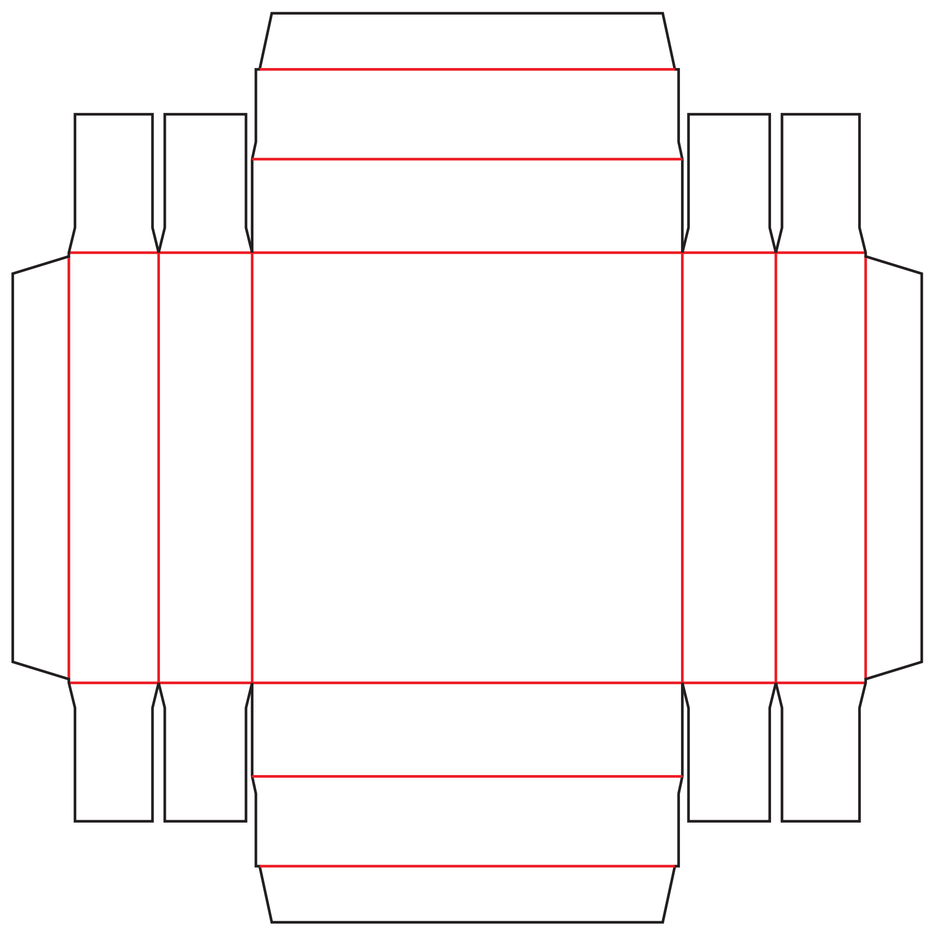

Hard Paper
200-300 gsm
Bottom Box

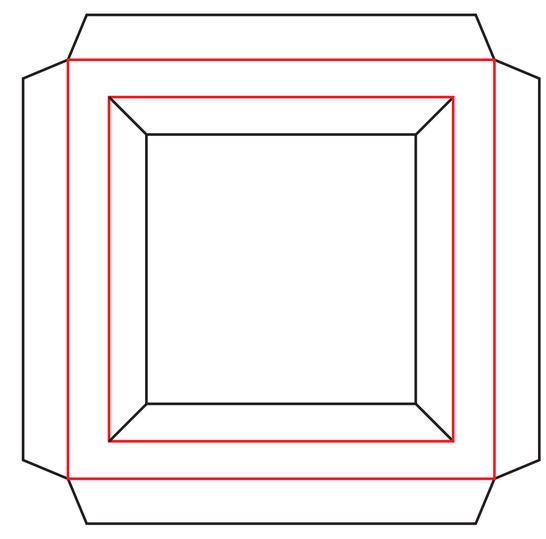

Hard Paper
300-350 gsm
Product Support

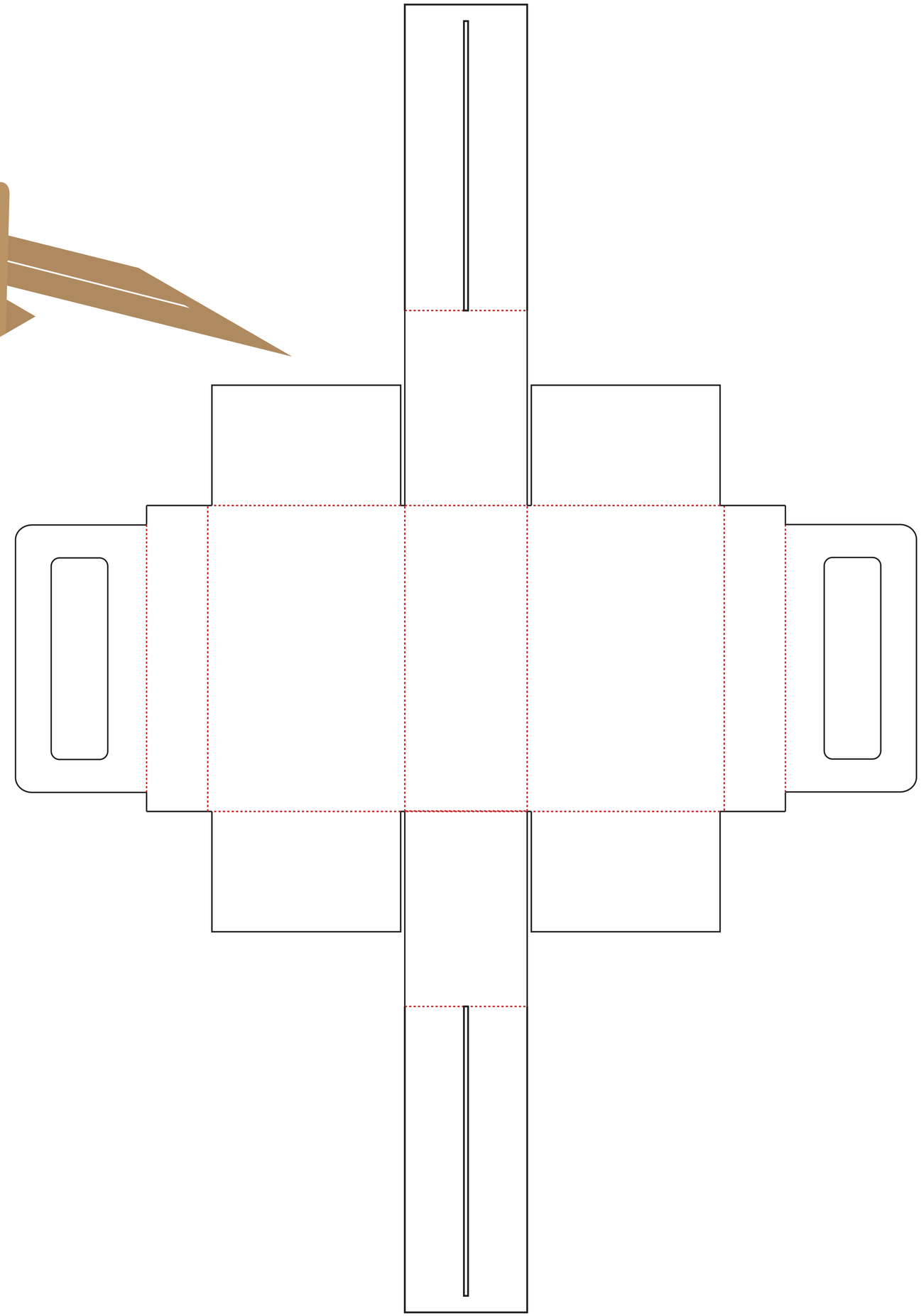

Hard Paper 200-350 gsm

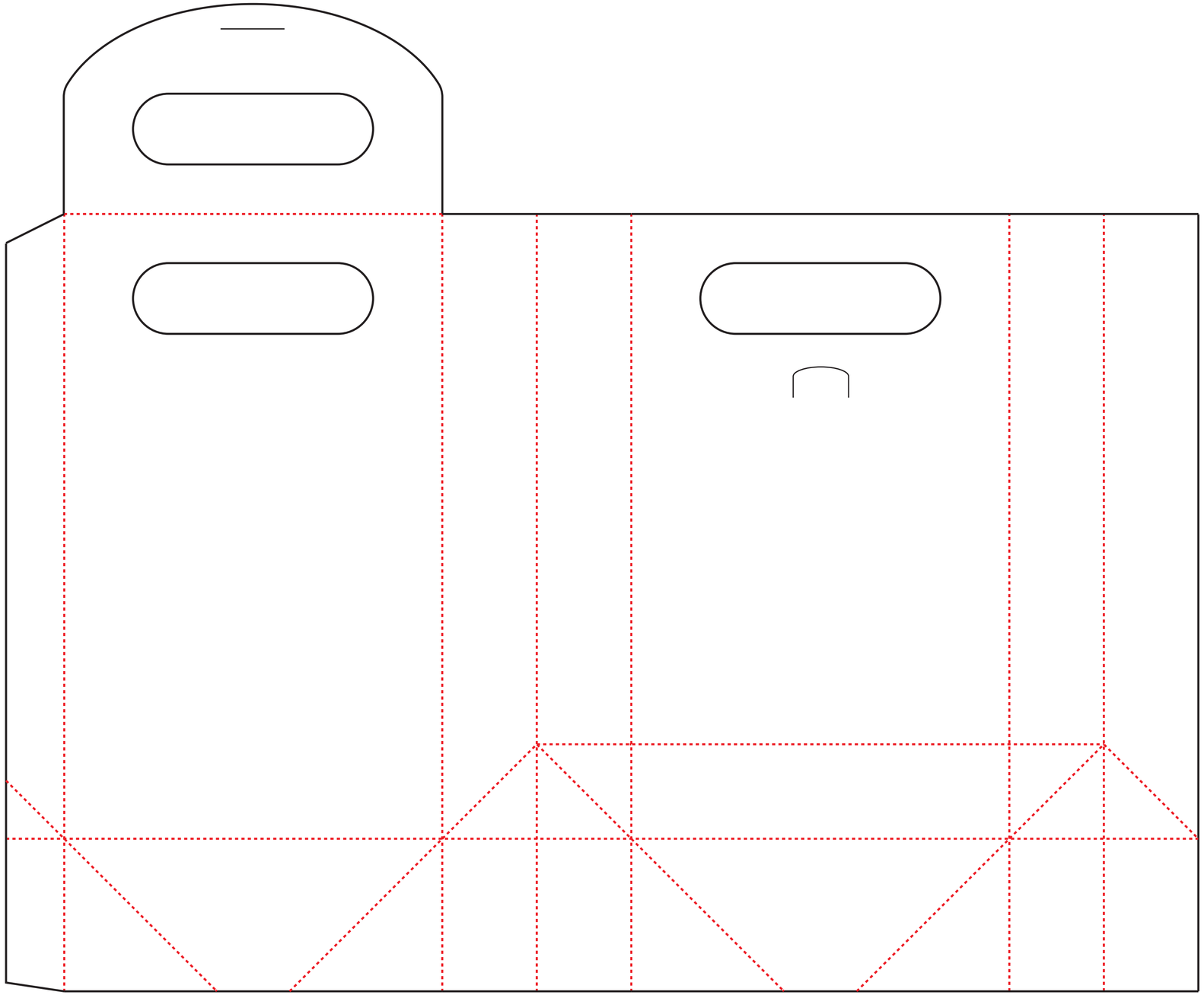

Logo
Brand
Name

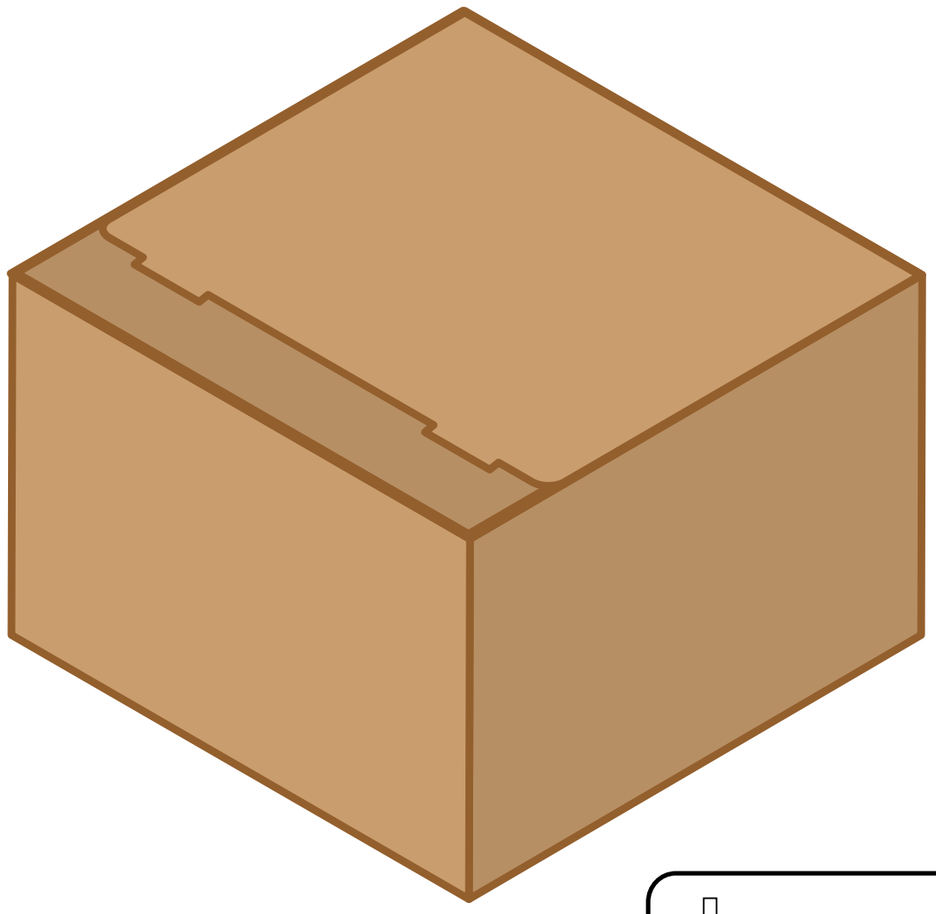

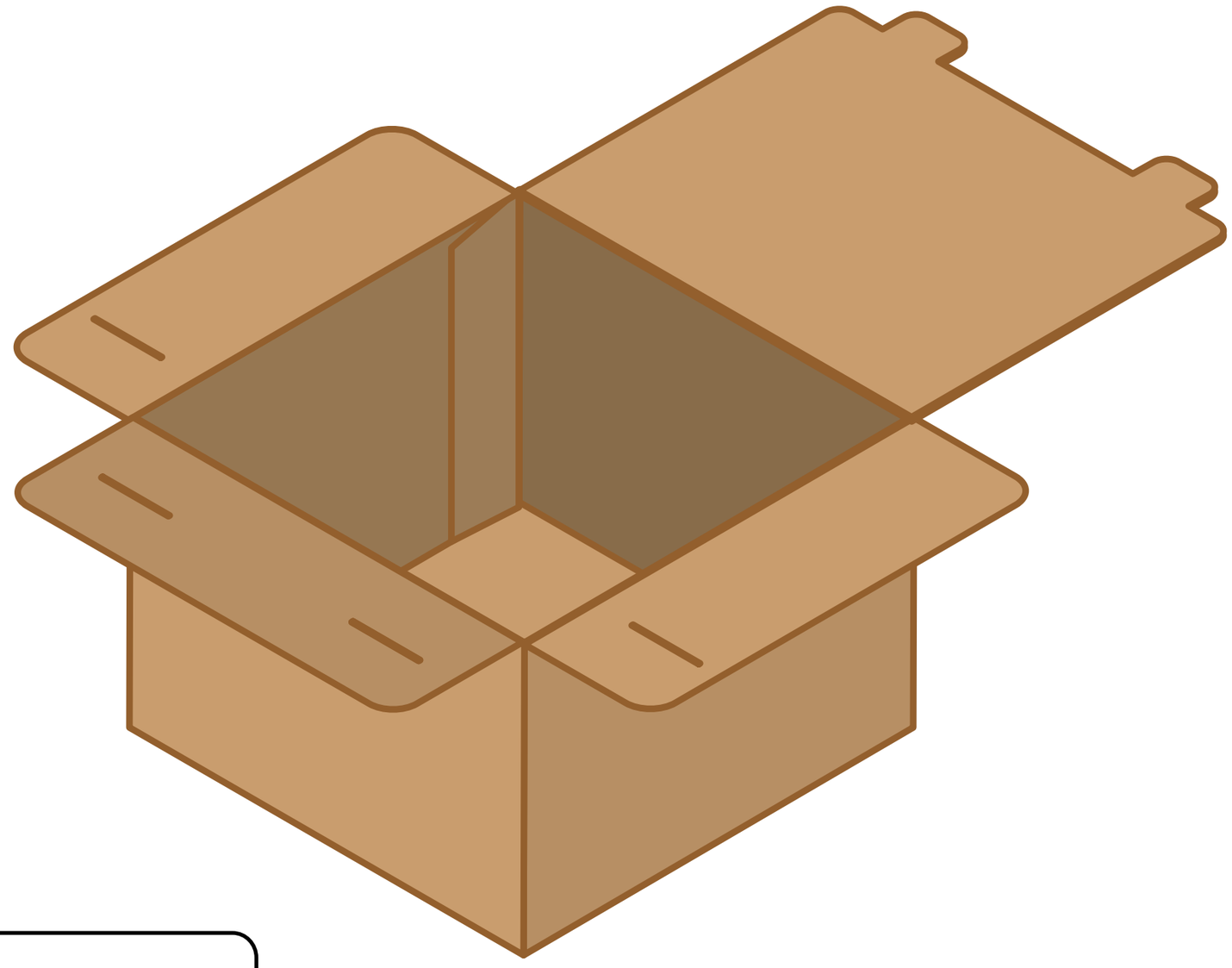

Corrugated Paper : E Flute

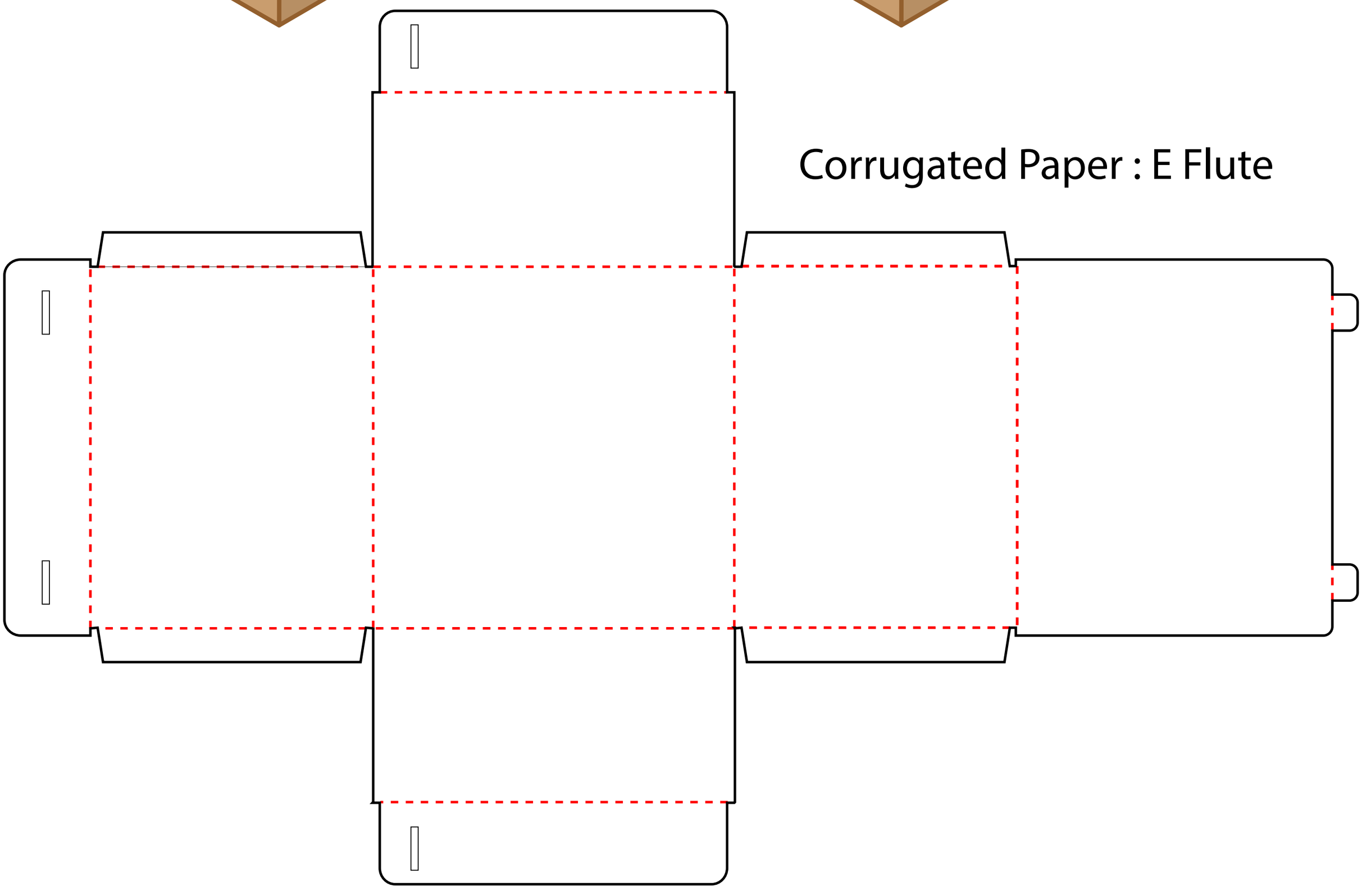

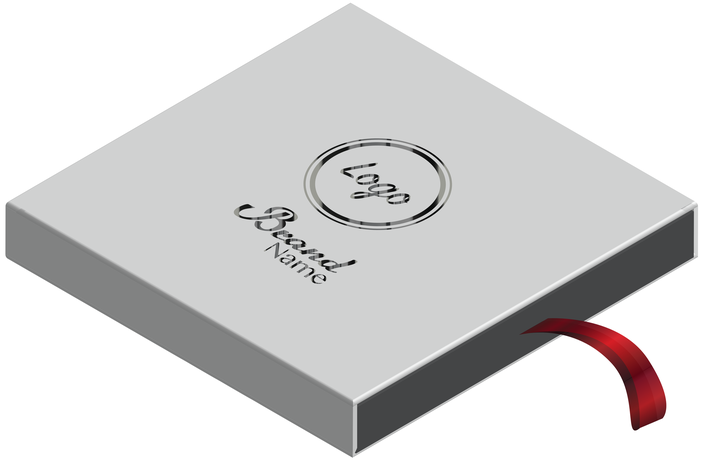

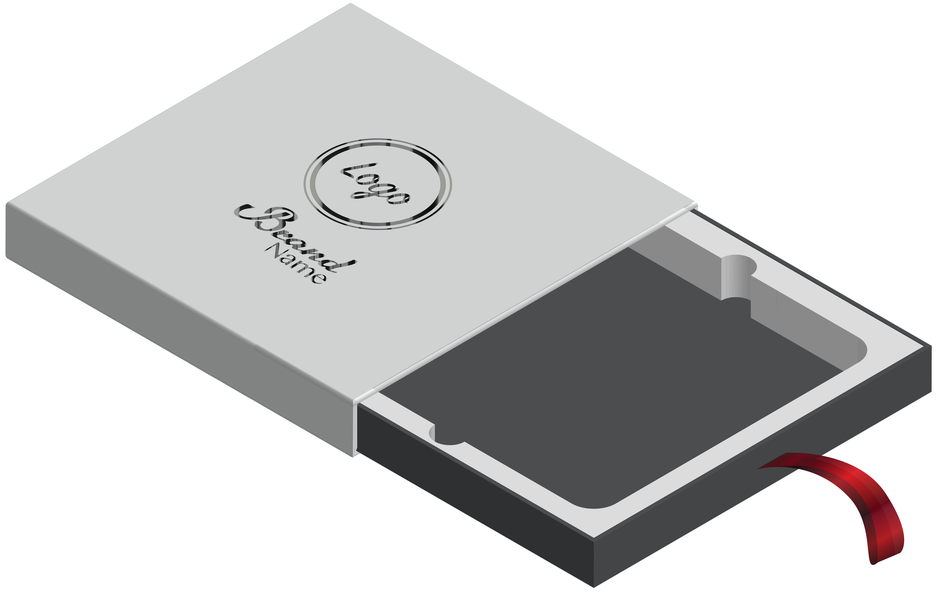

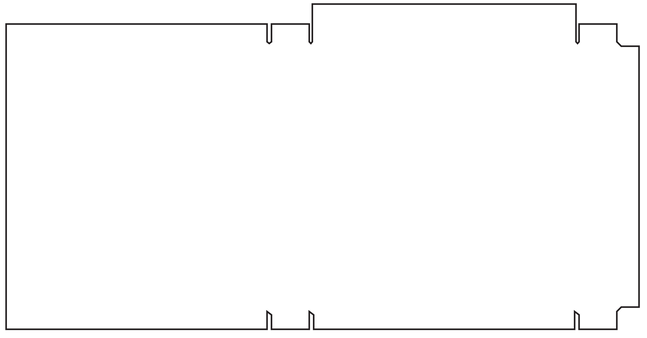

Wrapping Paper
Sleeve Box

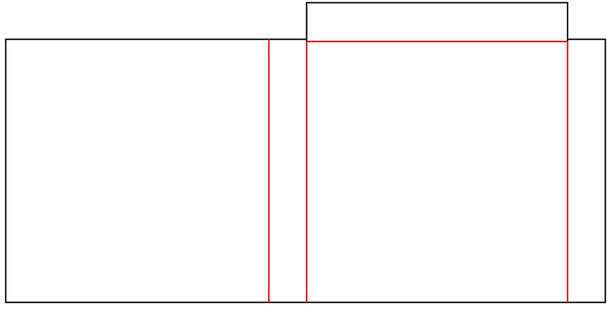

Hard Board Paper
Thick 0.2 cm Sleeve Box

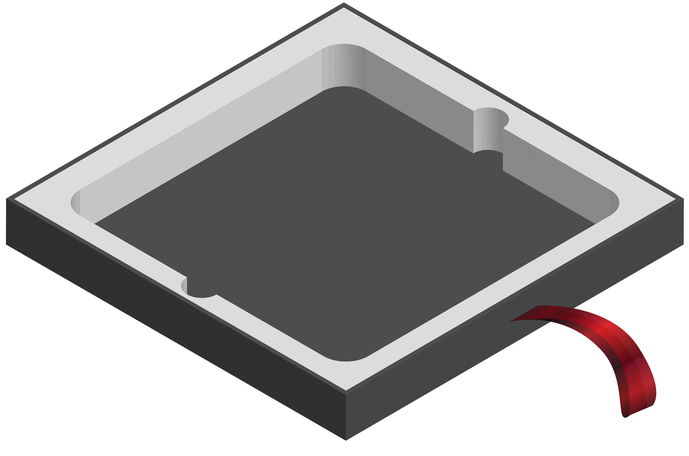

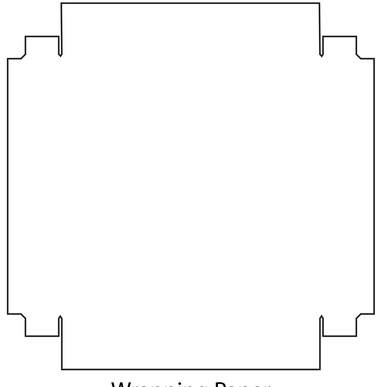

Wrapping Paper
Tray Box

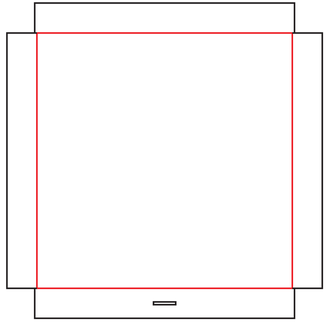

Hard Board Paper
Thick 0.2 cm Tray Box

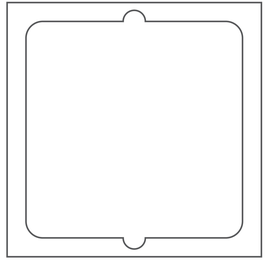

EVA Foam Or Sponge
Thick 2.5 cm
Product Support

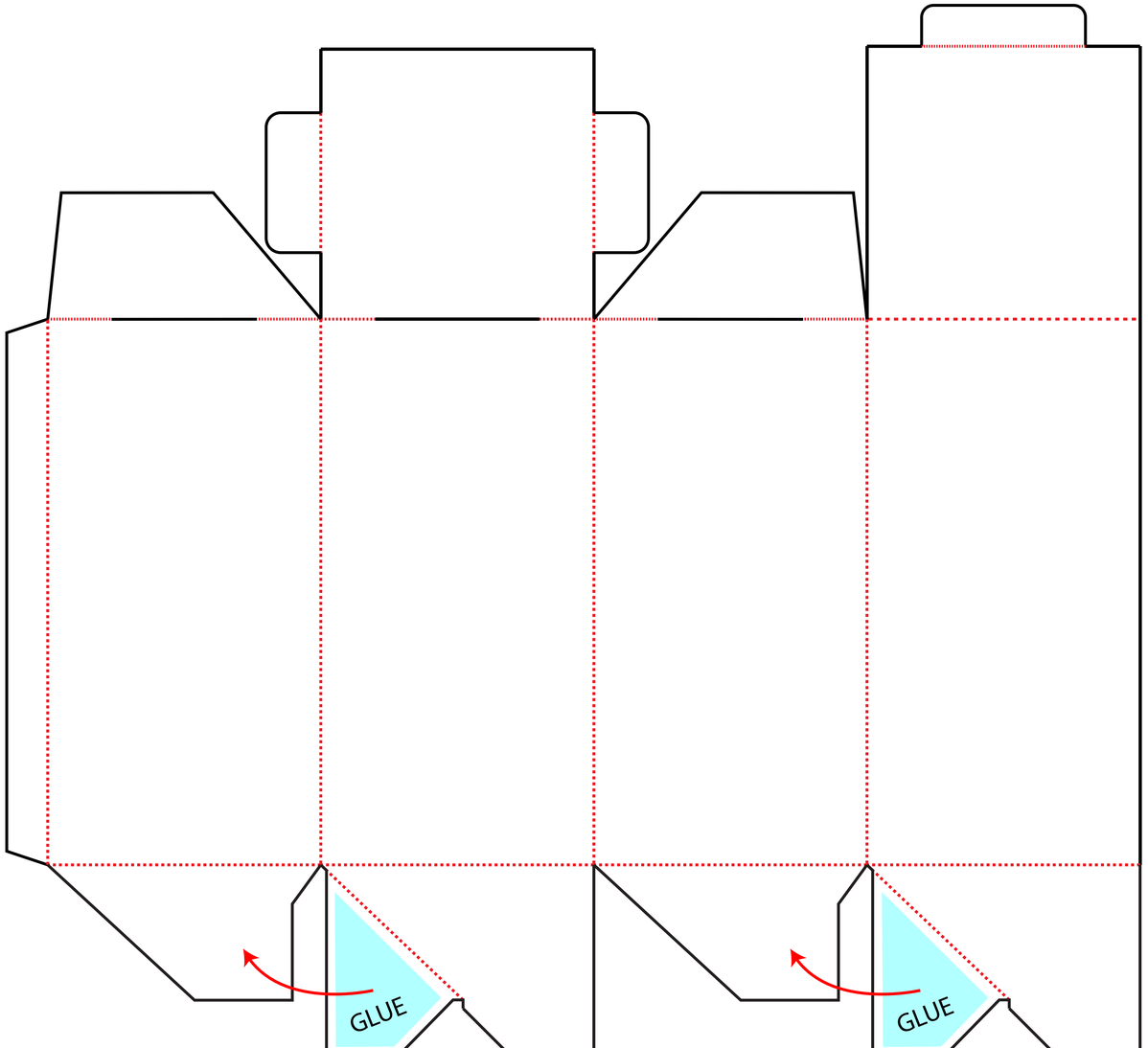
GLUE
GLUE

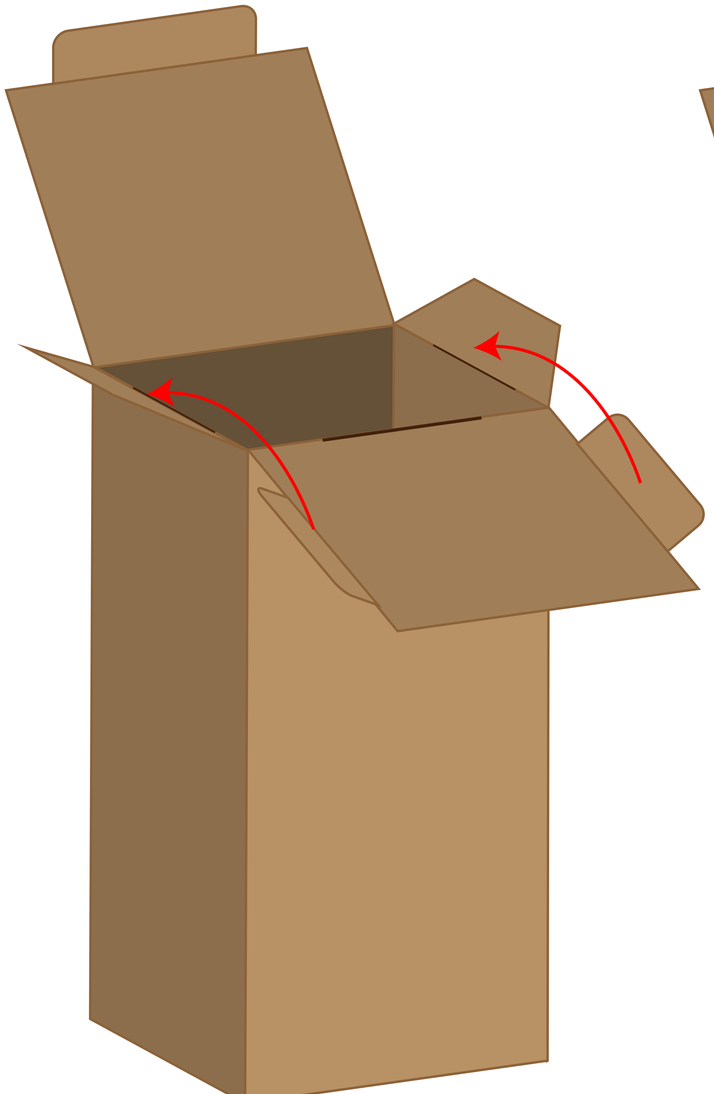

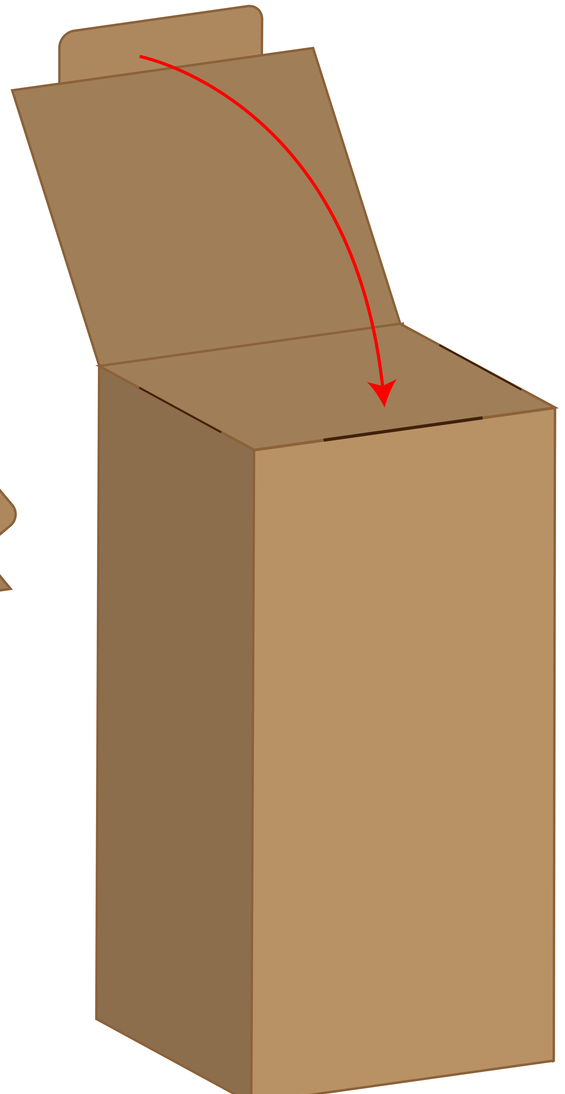

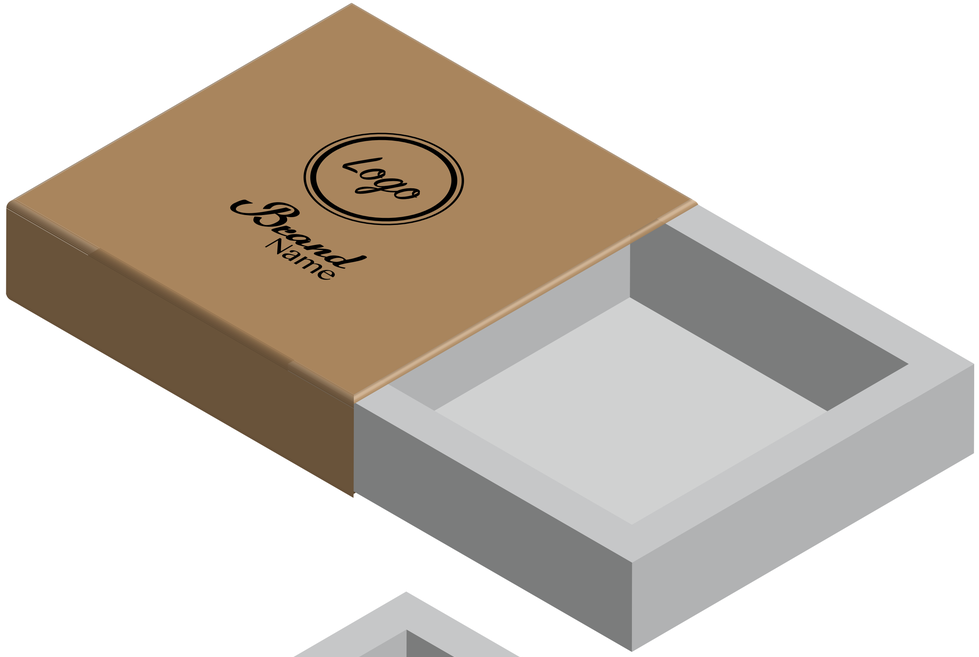

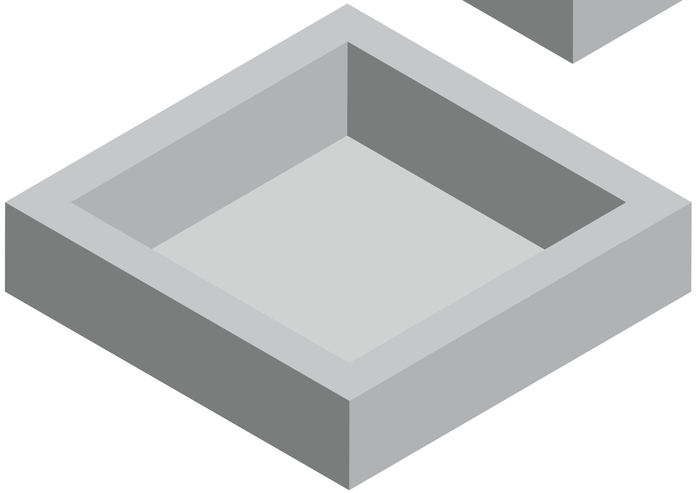

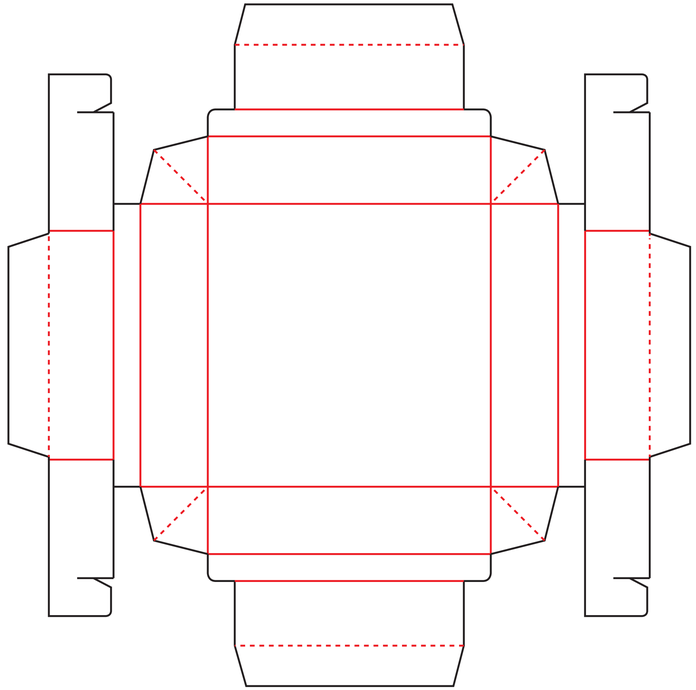

Hard Paper 200-300 gsm
Sleeve Box

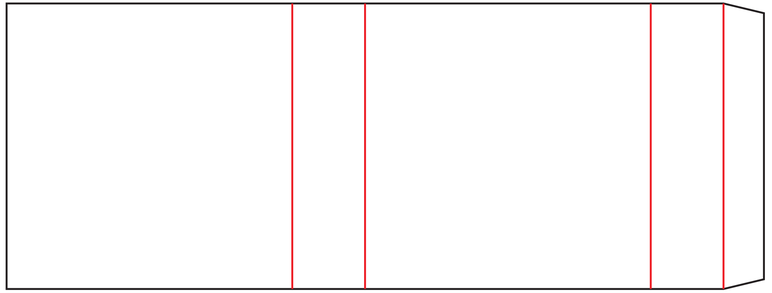

Hard Paper 200-300 gsm
Cover Box

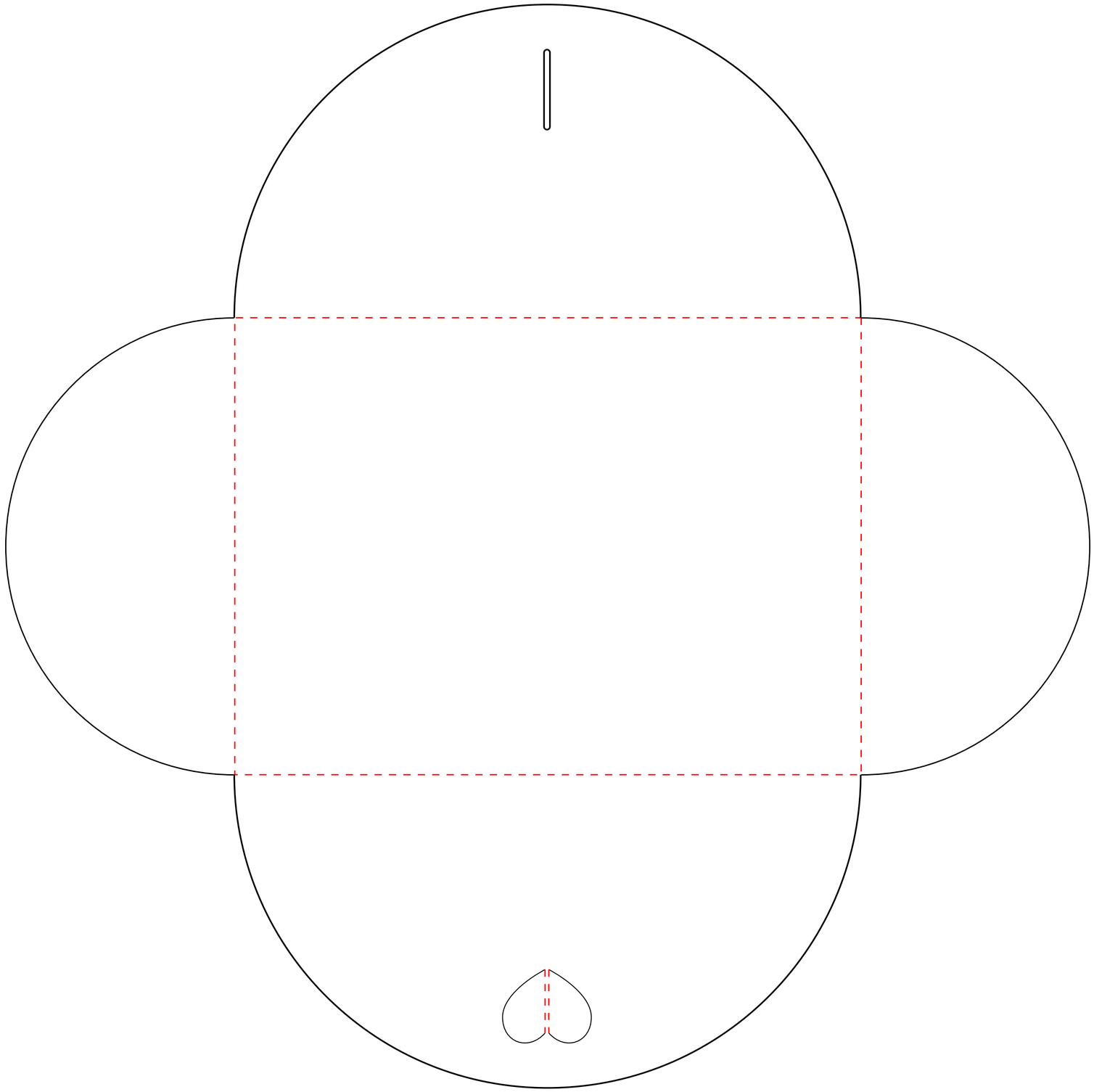

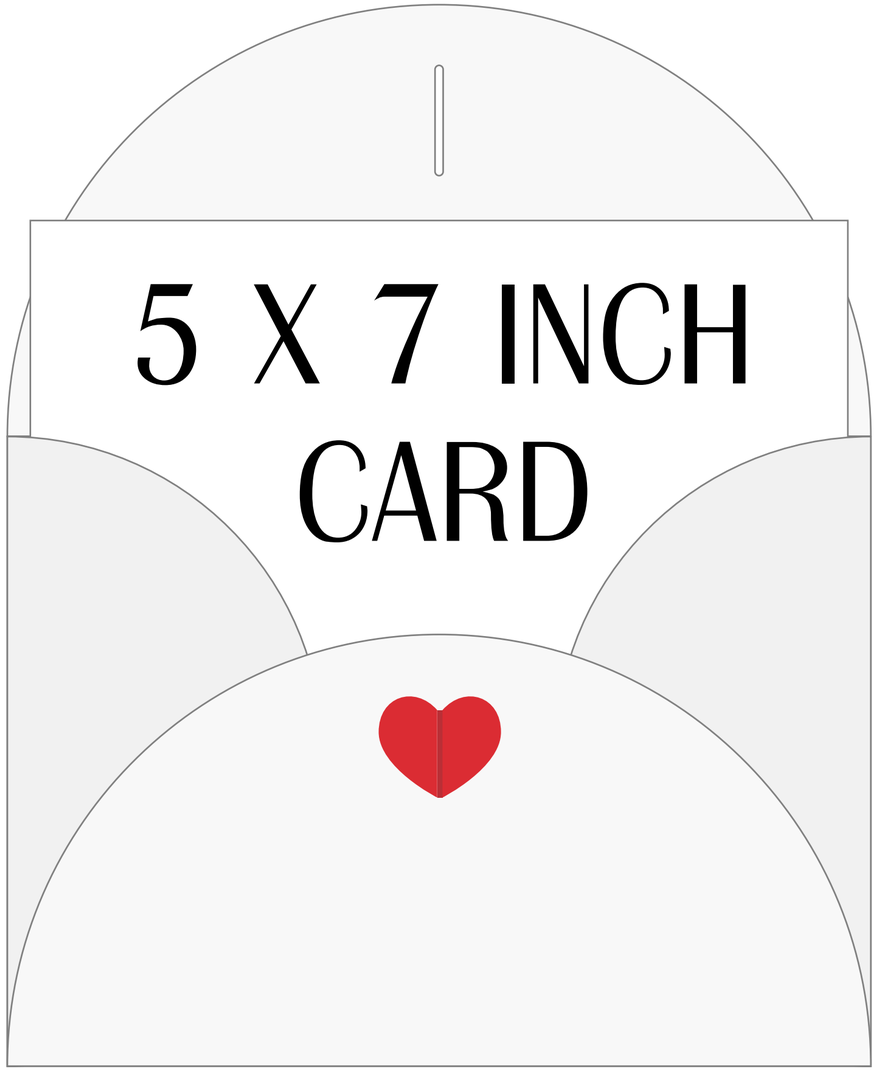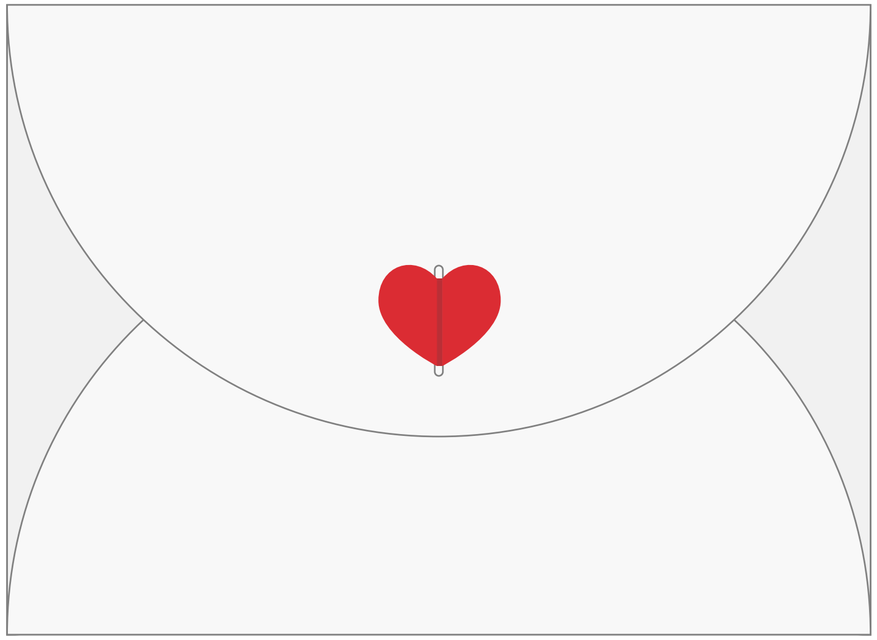
5 X 7 INCH
CARD